Connection wiring diagram (outline)

The following is an example of basic wiring diagram.

* The wiring methods differ depending on the equipment used. Refer to page 20 to 29 for details about various wiring methods.

(*1): • The common line E and individual channel lines should be in the same sheath wiring.
• The remainder wires in the same sheath wiring should be connected to the common line E of the master station for noise prevention.

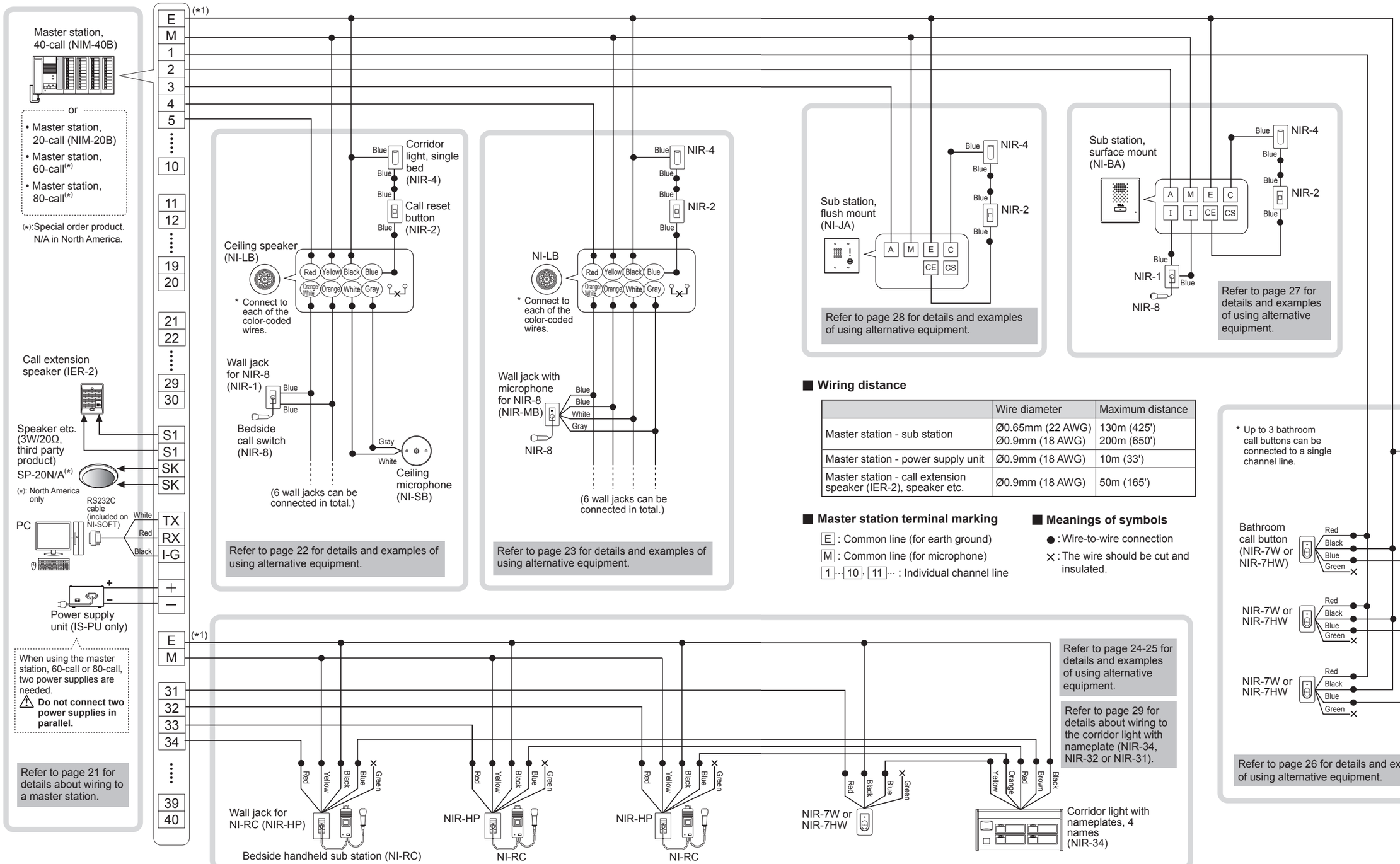

■ Wiring distance

	Wire diameter	Maximum distance
Master station - sub station	Ø0.65mm (22 AWG) Ø0.9mm (18 AWG)	130m (425') 200m (650')
Master station - power supply unit	Ø0.9mm (18 AWG)	10m (33')
Master station - call extension speaker (IER-2), speaker etc.	Ø0.9mm (18 AWG)	50m (165')

■ Master station terminal marking

E : Common line (for earth ground)
M : Common line (for microphone)
1···10, 11··· : Individual channel line

■ Meanings of symbols

● : Wire-to-wire connection
× : The wire should be cut and insulated.