weightechUSA

WTX-12

Junction box

Safe, practical and resistant for **connecting up to 12 load cells**

WTX-12_datasheet_v01 - 04/03/2024
Technical review: Loui Oriqui | **Comercial review:** Eber Santos
Edition: Stéphany

IP67

weightechUSA

WTX-12

Junction box

Made entirely of stainless steel
with special sealing.

IP67

Protected against
submersion and water jets.

Pressure
compensator
condensation

PG69 cable gland
stainless steel, stronger and safer

Connection for up to 12 load cells
simultaneously and unlimited number
of extra junction boxes on the same circuit

for load cells
with analog signal

Benefits

- Faster and more precise adjustment process by adjusting individual of the load cells or platform section;
- Protection against electric shock;
- GORE valve that prevents internal condensation, as it equalizes the pressure without allowing water or oil to enter, eliminating defects and increasing service life;
- Incredible thermal stability;

CONNECTIONS AND ADJUSTMENT POINT

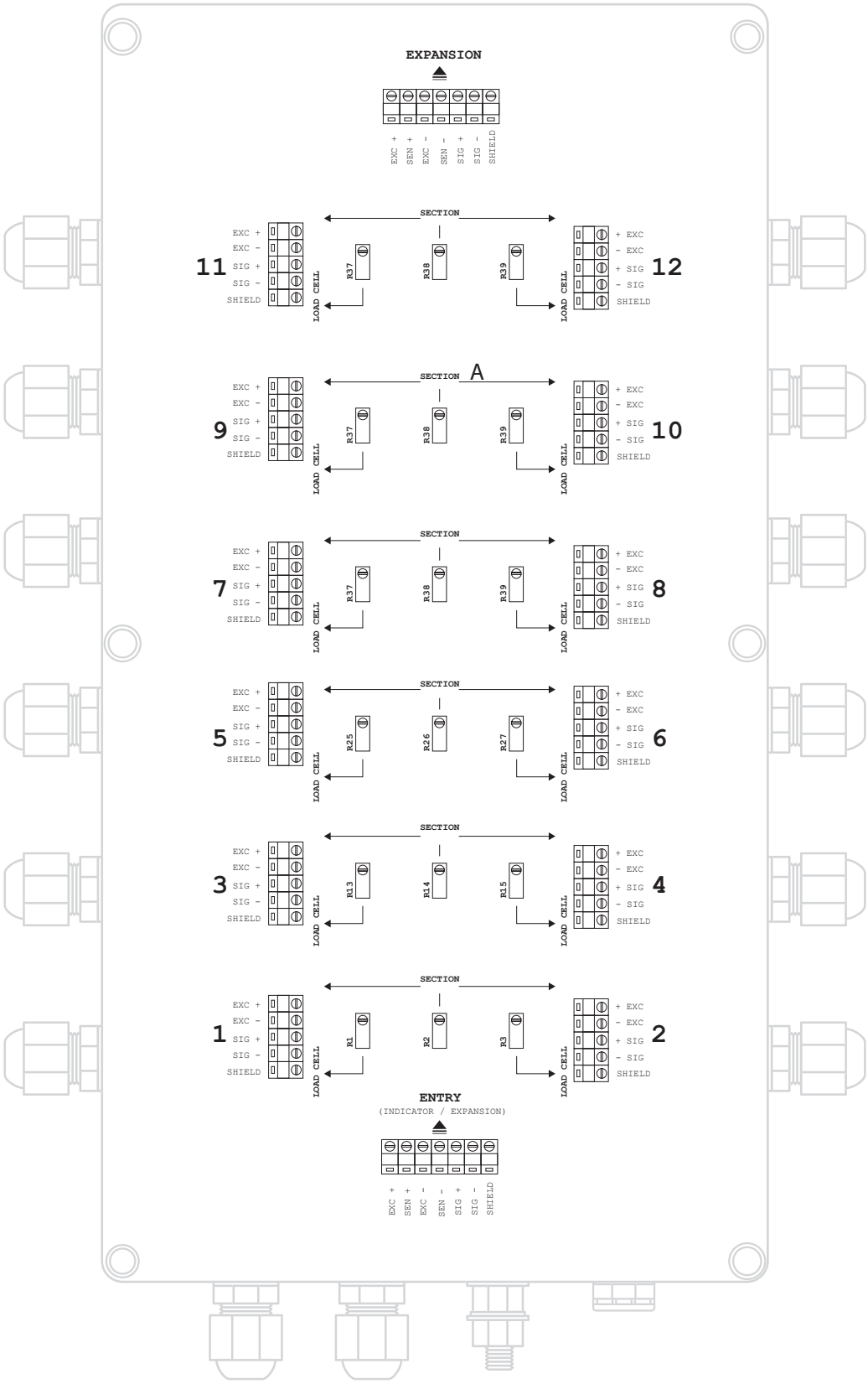

DIMENSIONS

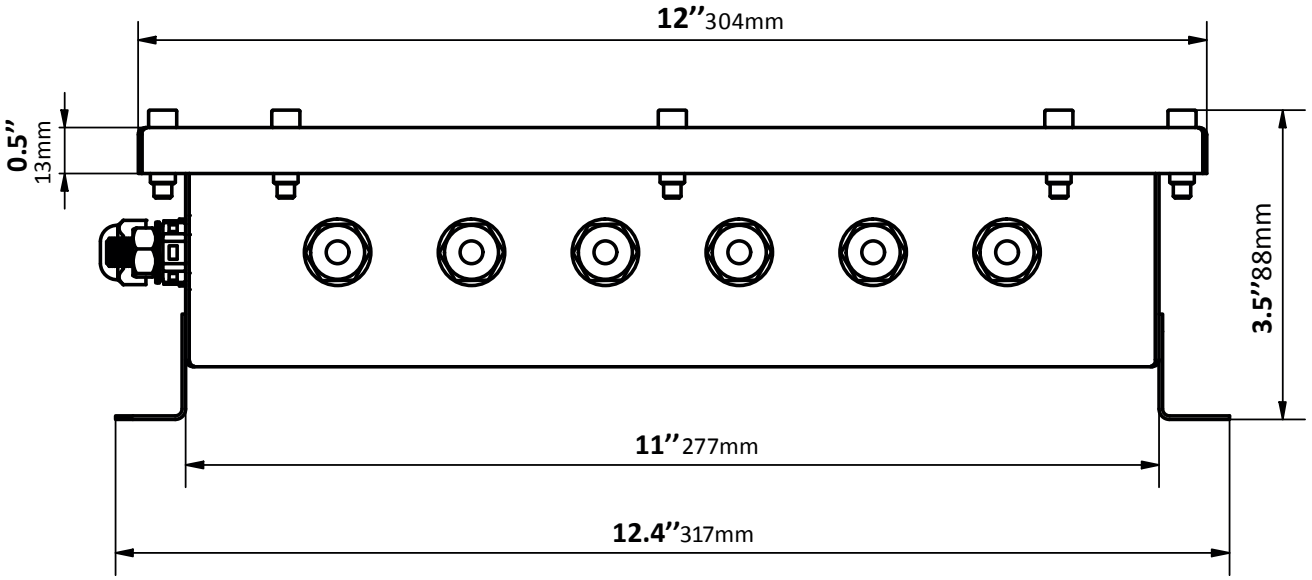
12''304mm
0.5''
13mm
3.5''88mm
11''277mm
12.4''317mm

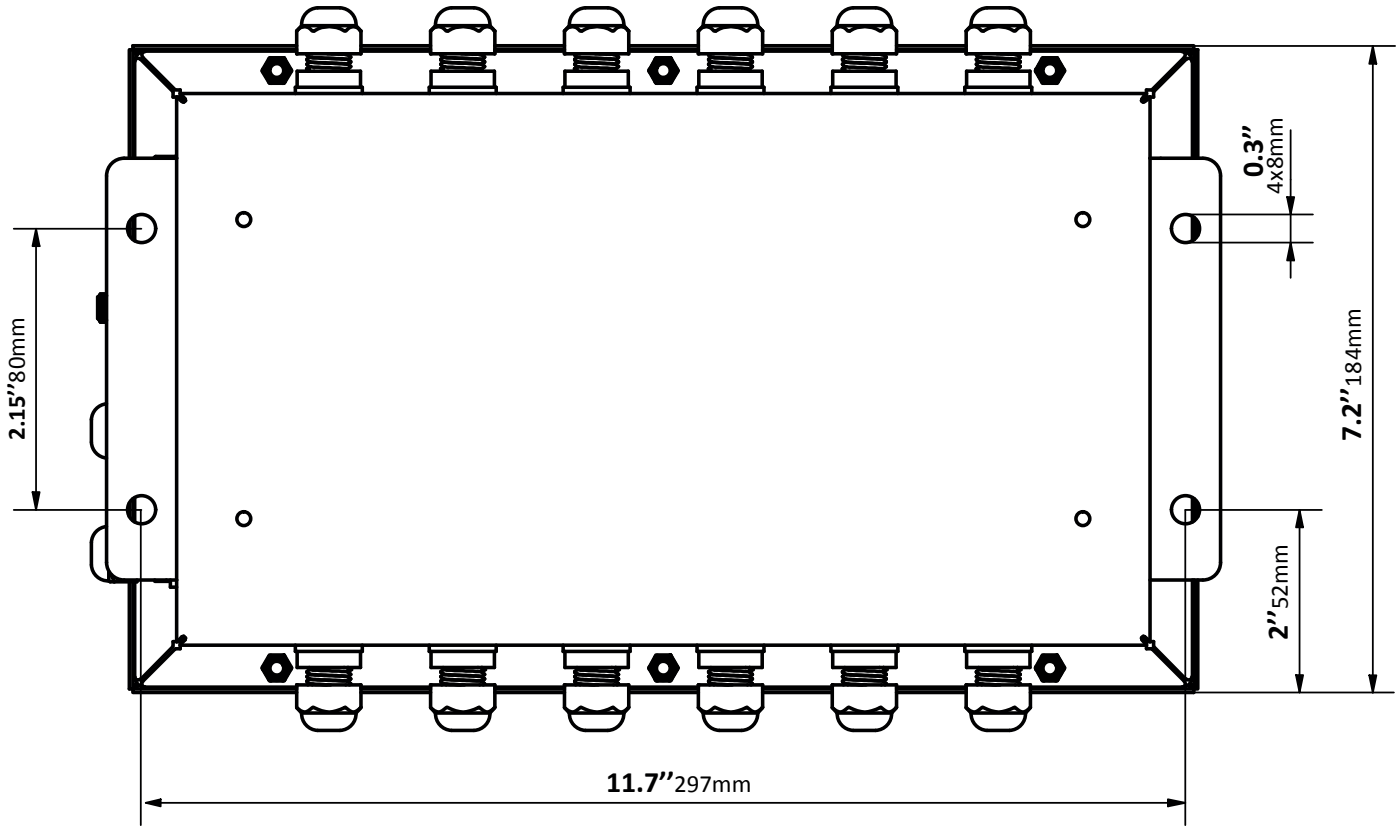
0.3''
4x8mm
2.15''80mm
7.2''184mm
2''52mm
11.7''297mm

PART NUMBER

Products	Codes
Junction Box WTX-12	40061

FIND US

10384 W State road 84 #6 - Davie, FL 33324
sales@weightechusa.com
weightechusa.com
Technical Support: +1 (954) 666-0877x302
Sales: +1 (954) 666-0877x305

MORE INFO

PRODUCT PAGE