GRI PUMPS
A GORMAN-RUPP COMPANY
PRESENTS

# Gear Pumps

The Pump People

## Product Overview

Gear pumps are designed primarily for metering and transfer applications. Their modular design allows a wide variation of flow ranges with a standard parts set. Gear pumps are self-priming and are “constant flow” pumps when RPM and differential pressure are constant. The materials of construction for bodies, gears and seals, provide a wide range of fluid compatibility.

**Pump Specifications:**
**Flow Rates:** Range to 2 liters/min
**Max Pressure:** 30 psi
**Max. Fluid Temperature:** Range to 180°F (82°C)
**Motors:** Thermally protected, continuous duty rated. Available in brush type DC motors.

**Selection Procedure:** Determine the flow and discharge head requirements for your system. The performance curves on this page provide the flow rates for each gear pump series. If the performance curve characteristics of a pump model do not meet the exact requirements of your application, please consult the factory.

For proper selection of the materials of construction (pump body, seals, shafts, hose connectors, gears, O-rings) refer to the Chemical Resistance Section.

**Mesh Size Recommendation:** A minimum 80 mesh screen is generally recommended for gear pumps for filtering such things as shavings, packaging materials, etc., in systems that are generally free of particulate contamination. For systems where sand, silt or other particle contamination is expected, a 400 mesh minimum screen is recommended. It should also be noted that sufficient strainer area be provided in order to prevent pump starving and cavitation. The fluid flow rate and viscosity determine how much strainer area is needed. System design should always include testing with the inlet strainer blocked and with maximum fluid viscosity.

**OEM Options:** GRI specializes in the design and manufacturing of customized pumps for the OEM market. Other gear pumps are available with different flows and pressures. Please contact us to discuss custom OEM options.

**Features:**

- Long life
- High pressure
- Reversible
- Self-priming
- Pump assemblies made with PPS Polymers
- Compact and durable
- Excellent chemical compatibility
- Positive displacement

## 19000-001, 002

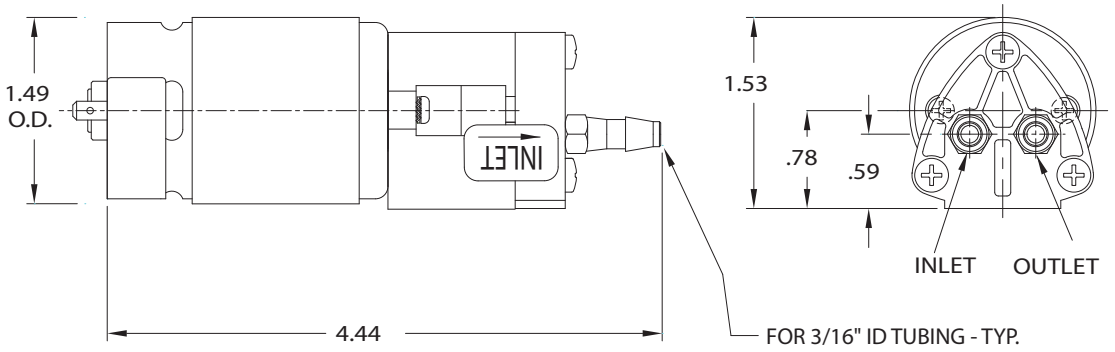


## 19000-003, 004

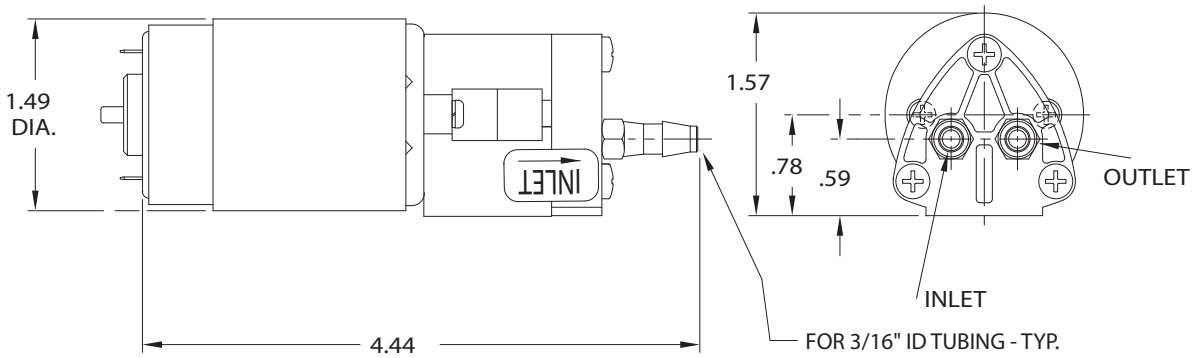


## 19000-005, 006, 008

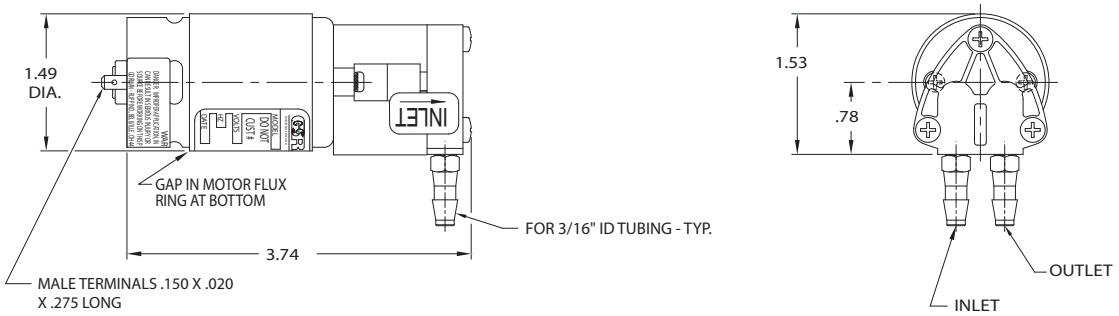


## 19000-007

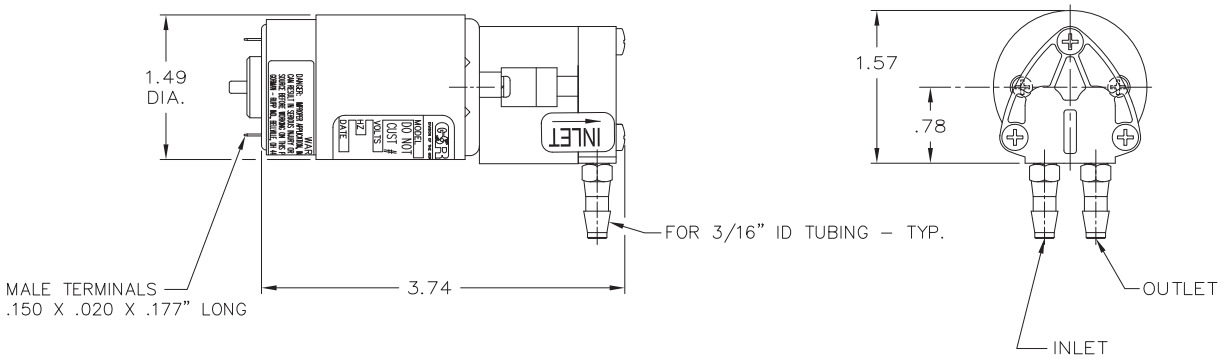



The Pump People

180 Hines Ave. • Bellville, OH 44813 • PH: 419-886-3001 • FAX: 419-886-2338 • www.GRIpumps.com

| Model Number | Motor Voltage | Motor Type | Port Positions | Connection Size (inches) | Approx. Wt. | Max. Flow mL/min |
|---|---|---|---|---|---|---|
| 19000-001 | 24 VDC | Brush | Front | 3/16 | 8 oz. | 2000 |
| 19000-002 | 12 VDC | Brush | Front | 3/16 | 8 oz. | 1875 |
| 19000-003 | 12/24 VDC | Brush | Front | 3/16 | 8 oz. | 975/2125 |
| 19000-004 | 12 VDC | Brush | Front | 3/16 | 8 oz. | 1550 |
| 19000-005 | 24 VDC | Brush | Side | 3/16 | 8 oz. | 2000 |
| 19000-006 | 12 VDC | Brush | Side | 3/16 | 8 oz. | 1875 |
| 19000-007 | 12/24 VDC | Brush | Side | 3/16 | 8 oz. | 975/2125 |
| 19000-008 | 12 VDC | Brush | Side | 3/16 | 8 oz. | 1550 |

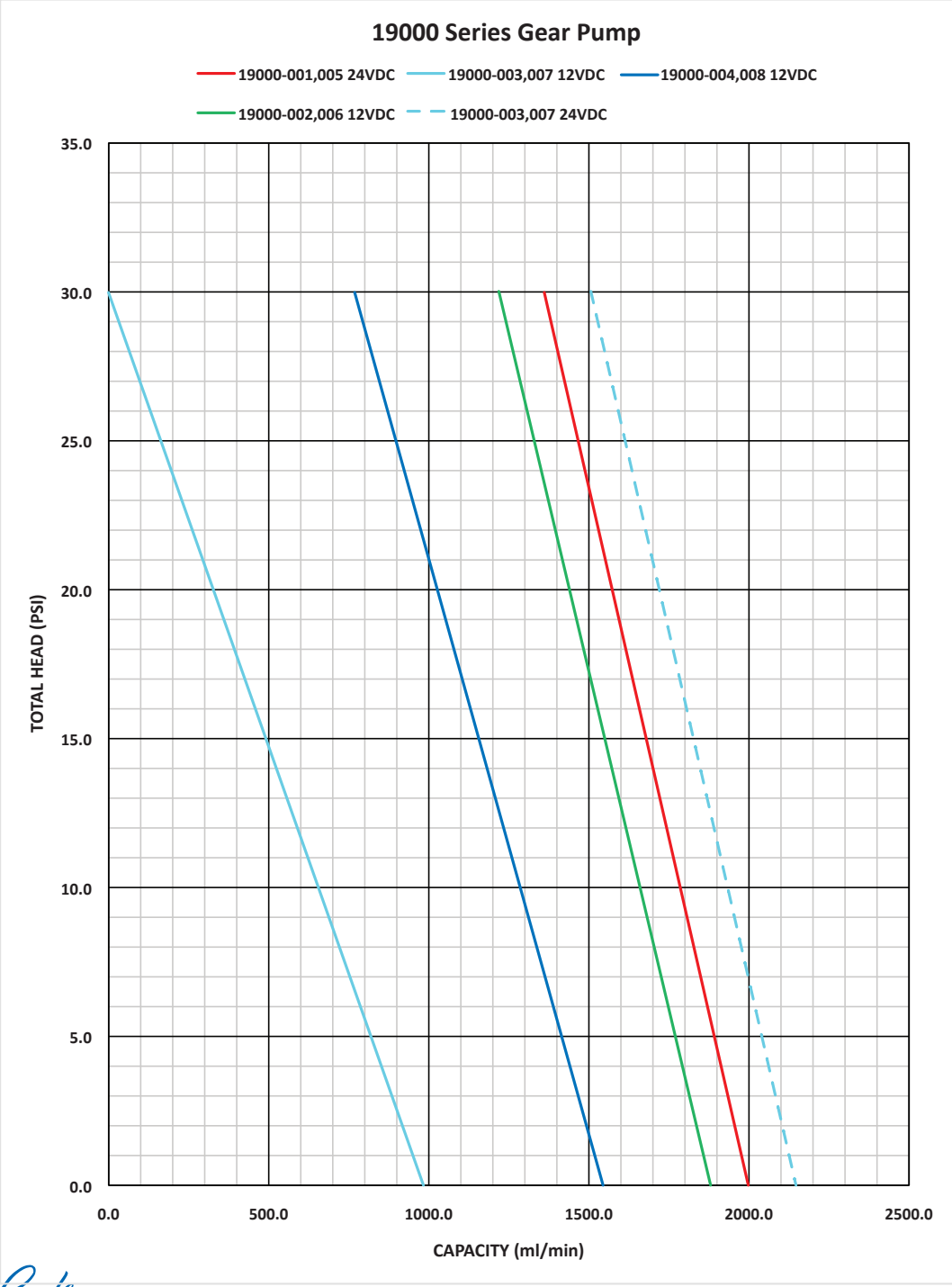


The Pump People

180 Hines Ave. • Bellville, OH 44813 • PH: 419-886-3001 • FAX: 419-886-2338 • www.GRIpumps.com