CALL TOLL FREE 877-742-2878 FOR SALES AND SUPPORT
Return to BurtProcess.com

CRE, CRIE, CRNE

Vertical, multistage centrifugal E-pumps
North America, 60 Hz

be
think
innovate

GRUNDFOS

Table of contents

1. Product introduction 4
Pump Energy Index 4
E-pumps with and without a sensor 5
Components of a Grundfos E-pump 5
When to select an E-pump 5
Performance range 6
Applications 7
Product range, CRE 9
Pump 10
Motor 10
Terminal box positions 13
Ambient temperature 13
Installation altitude 13

2. MLE technical data 14
MLE 1/2 to 2 HP (0.37 to 1.5 kW) permanent-magnet motors 14
MLE 1 to 15 HP (0.75 to 11 kW) permanent-magnet motors 15
MLE 1 1/2 to 7 1/2 HP (1.1 to 5.5 kW) permanent-magnet motors 16
MLE 20 to 30 HP (15 to 22 kW) asynchronous motors 17
MLE motors for CRE-H and CRNE-H 18

3. Control of E-pumps 19
E-pumps in the service of industry 19
E-pumps in commercial building services 19
Control options 20
Control modes for E-pumps 21

4. Advanced use of MLE motors 23
Bearing monitoring 23
Standstill heating 23
Outdoor installation 24
Stop function 24
Temperature sensors 1 and 2 25
Signal relays 26
Analog sensor inputs 1 and 2 26
Limit exceeded 1 and 2 27

5. Application examples of differential pressure in a circulation system31
Proportional differential pressure, parabolic curve 32
Constant differential pressure setpoint range 32
Proportional differential pressure setpoint range 32

6. Construction 33
CRE 1s, 1, 3, 5, 10, 15 and 20 33
CRIE, CRNE 1s, 1, 3, 5, 10, 15 and 20 33
CRE 32, 45 and 64 34
CRNE, CRIE 32, 45 and 64 34
CRE 95, 125 and 155 35
CRNE 95, 125 and 155 36

7. Type keys and codes 37

8. Operating and inlet pressure 39
Maximum operating pressure and temperature range 39
Maximum operating pressure and liquid temperature 40
Operating range of the shaft seal 41
Maximum inlet pressure 42

9. Selection and sizing 43
Selection of pump 43
How to read the curve charts 47
Guidelines to the performance curves 47

10. Performance curves and technical data 48
CRE, CRIE, CRNE 1 48
CRE, CRIE, CRNE 3 52
CRE, CRIE, CRNE 5 56
CRE, CRIE, CRNE 10 60
CRE, CRIE, CRNE 15 64
CRE, CRIE, CRNE 20 68
CRE, CRNE 32 72
CRE, CRNE 45 75
CRE, CRNE 64 78
CRE 95 81
CRNE 95 83
CRE 125 85
CRNE 125 87
CRE 155 89
CRNE 155 91

11. Motor data 93

12. Pumped liquids 94
List of pumped liquids 94

13. Accessories 96
Counterflanges for CRE 96
Counterflanges for CRNE 97
PJE couplings for CRNE 98
FlexiClamp base connections 98
Potentiometer for CRE, CRIE, CRNE 99
LiqTec 100
Pressure sensors 103
Flow transmitters 108
Gauges for CRE, CRIE, CRNE 108
Temperature sensor 109
Remote controls 110
CIU communication interface units 111
CIM communication interface modules 111

14. Variants 112
Motors 112
Connections and other variants 112
Shaft seals 112
Pumps 112

15. Quotation text **114**

16. Grundfos Product Center **115**
Grundfos GO Remote 116

1. Product introduction

TM06 9851 0817

Fig. 1 CRE, CRIE and CRNE pumps

The CRE, CRIE and CRNE pumps are based on the CR, CRI and CRN pumps.

CRE, CRIE and CRNE pumps belong to the so-called E-pump family and are referred to as E-pumps.

The difference between the CR and CRE pump ranges is the motor. CRE, CRIE and CRNE pumps are fitted with an E-motor, that is a motor with built-in variable frequency drive (VFD).

The E-pump motor is a Grundfos MLE motor.

The built-in frequency converter enables continuously variable control of the motor speed. This means that the pump can be set to operate at any duty point. The purpose of continuously variable speed control of the motor speed is to adjust the performance to a given requirement.

CRE, CRIE, CRNE pumps are available with a pressure sensor enabling the control of the pressure on the outlet side of the pump.

In new installations, the E-pumps provide a number of advantages. The integrated variable frequency drive has a built-in motor protection function which protects both motor and electronics against overload. This means that E-pump installations do not require a motor-protective circuit breaker, but only a normal short-circuit protection for the cable.

The pump materials are identical to those of the CR, CRI and CRN pump ranges.

Pump Energy Index

Pump Energy Index (PEI) was established by the U.S. Department of Energy (DOE) and adopted by Canada as the standard metric used to evaluate pump efficiency. The value is the ratio of the pump efficiency rating (PER) divided by the calculated minimally compliant PER (PER_{STD}) for the pump type. This provides a representation of a pump's actual performance compared to the minimal standard performance required by regulation. The lower the PEI value, the more efficient a pump is at the tested operating points.

PER is determined by defined testing parameters required by the DOE. This includes testing a particular pump model at its best efficiency point (BEP).

For PEI values there are two different versions:

- PEI_{CL} (constant load): Applies to a bare-shaft pump and a pump sold with a motor
- PEI_{VL} (variable load): Applies to pumps sold with a motor and controller (such as VFD, VSD)

The DOE has set the maximum PEI value as 1.00. Any pump, pump and motor, or pump, motor and controller that exceeds a PEI value of 1.00 can no longer be manufactured after January 26, 2020.

PEI is a generalized efficiency value. PEI cannot be used to determine the efficiency of a pump in a specific application.

Product type	PEI_{vL}
CRE, CRNE, CRIE 10	See *CRE 10 dimensional data* on page 61
CRE, CRNE, CRIE 15	See *CRE 15 dimensional data* on page 65
CRE, CRNE, CRIE 20	See *CRE 20 dimensional data* on page 69
CRE, CRNE 32	See *CRE 32 dimensional data* on page 73
CRE, CRNE 45	See *CRE 45 dimensional data* on page 76
CRE, CRNE 64	See *CRE 64 dimensional data* on page 79
CRE, CRNE 95	See *CRE 95 dimensional data* on page 82
CRE, CRN 125	See *CRE 125 dimensional data* on page 86
CRE, CRN 155	See *CRE 155 dimensional data* on page 90

Note: The CRE pumps operate at 2-pole speeds.

E-pumps with and without a sensor

CRE, CRIE, CRNE pumps are available with a pressure sensor enabling the control of the pressure on the outlet side of the pump.

The purpose of supplying the E-pumps with a pressure sensor is to make the installation and commissioning simple and quick. All other E-pumps are supplied without a sensor.

E-pumps without a sensor are used when uncontrolled operation (open loop) is required or when there is a wish to fit a sensor at a later stage in order to enable:

- pressure control
- flow control
- level control of liquid in a tank
- temperature control
- differential pressure control
- differential temperature control.

E-pumps without a sensor are also used when a remote analog signal is connected to the setpoint input terminal.

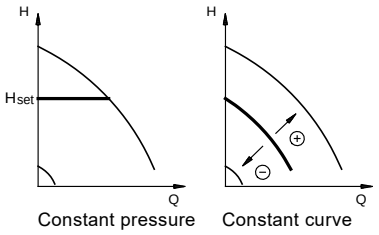

Fig. 2 CRE, CRIE, CRNE with a sensor

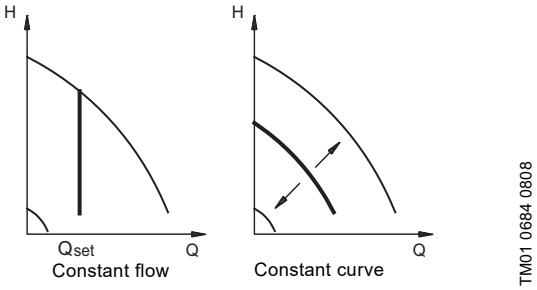

Fig. 3 E-pumps without a sensor

Components of a Grundfos E-pump

An E-pump is not just a pump, but a system which is able to solve application problems or save energy in a variety of pump installations. All that is required is the power supply connection and the fitting of the E-pump in the pipe system, and the pump is ready for operation.

The pump has been tested and pre-configured from the factory. The operator only has to specify the desired setpoint (pressure) and the system is operational.

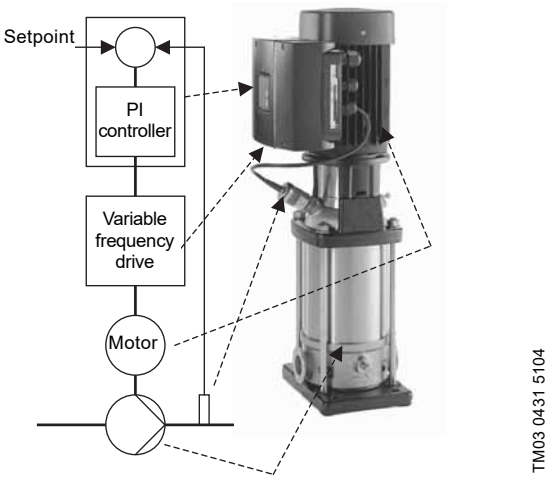

Fig. 4 Components of a Grundfos E-pump

When to select an E-pump

Select an E-pump if the following is required:

- controlled operation, i.e. the consumption fluctuates
- constant pressure
- communication with the pump.

Adaptation of performance through frequency-controlled speed control offers obvious benefits, such as:

- energy savings
- increased comfort
- control and monitoring of the pump performance.

Performance range

CRE, CRIE, CRNE

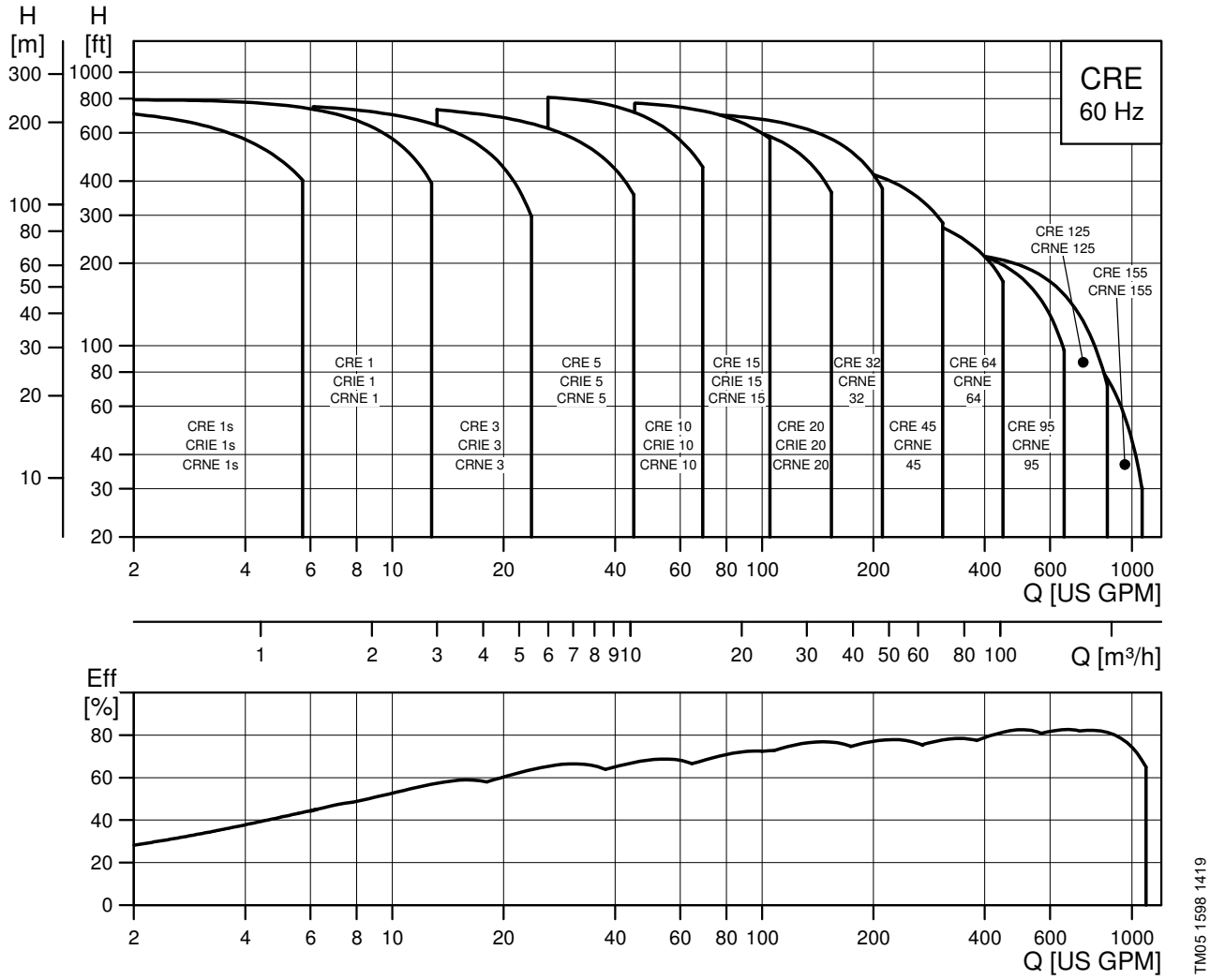

Applications

Application
Water supply
Filtration and transfer at waterworks
Distribution from waterworks
Pressure boosting in mains
Pressure boosting in high-rise buildings, hotels, etc.
Pressure boosting for industrial water supply
Industry
Pressure boosting
Process water systems
Washing and cleaning systems
Vehicle-washing tunnels
Firefighting systems
Liquid transfer
Cooling and air-conditioning systems (refrigerants)
Boiler feed and condensate systems
Machine tools (cooling lubricants)
Aquafarming
Special transfer duties
Oils and alcohols
Acids and alkalis
Glycol and coolants
Water treatment
Ultrafiltration systems
Reverse osmosis systems
Softening, ionizing, demineralizing systems
Distillation systems
Separators
Swimming baths
Irrigation
Field irrigation (flooding)
Sprinkler irrigation
Drip-feed irrigation

For further information about which pump version to choose for a specific application or liquid, see *Pumped liquids* on page 94.

Application examples

As discussed earlier, speed control of pumps is an efficient way of adjusting pump performance to the system.

In this section, we will discuss the possibilities of combining speed-controlled pumps with PI controllers and sensors measuring system parameters, such as pressure, differential pressure and temperature. On the following pages, the different options will be presented through examples.

Constant-pressure control

A pump supplies tap water from a break tank to various taps in a building.

The demand for tap water varies, and so does the system characteristic, according to the required flow rate. To achieve comfort and energy savings, we recommend a constant supply pressure.

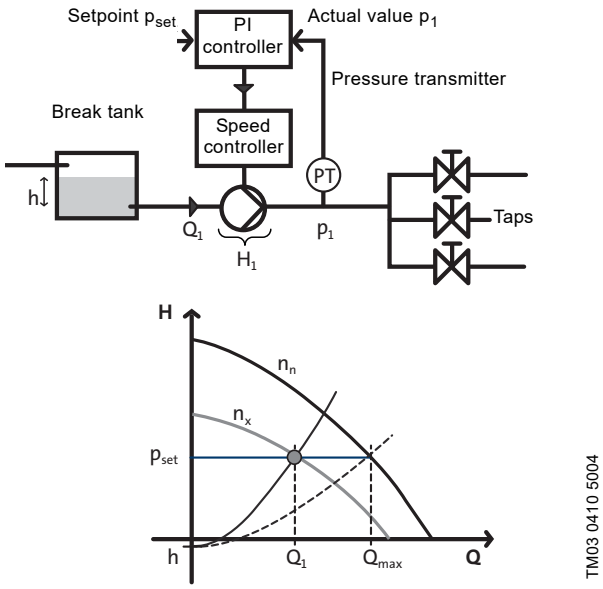

Fig. 5 Constant-pressure control

As appears from fig. 5, the solution is a speed-controlled pump with a PI controller. The PI controller compares the required pressure, p_{set}, with the actual supply pressure, p_1, measured by a pressure transmitter PT.

If the actual pressure is higher than the setpoint, the PI controller reduces the speed and consequently the performance of the pump until p_1 is equal to p_{set}. Figure 5 shows what happens when the flow rate is reduced from $Q_{max.}$ to Q_1.

The controller reduces the speed of the pump from n_n to n_x in order to ensure that the required outlet pressure is identical for p_1 and p_{set}. The pump ensures that the supply pressure is constant in the flow range of 0 to Q_{max}. The supply pressure is independent of the level (h) in the break tank. If h changes, the PI controller adjusts the speed of the pump so that p_1 always corresponds to the setpoint.

Constant-temperature control

Performance adjustment by means of speed control is suitable for a number of industrial applications. Figure 6 shows a system with an injection-molding machine which must be water-cooled to ensure high-quality production.

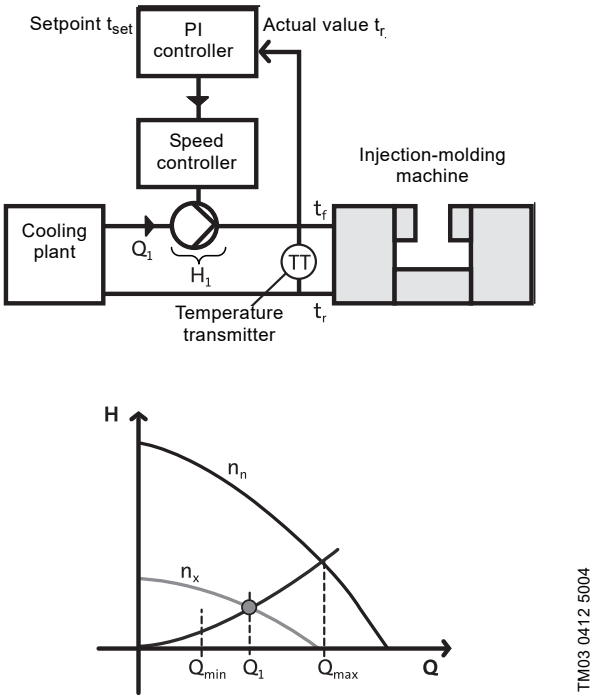

Fig. 6 Constant-temperature control

The pump will be operating at a fixed system characteristic. The controller will ensure that the actual flow rate, Q_1, is sufficient to ensure that t_r is equal to t_{set}.

The machine is cooled with water at 59 °F (15 °C) from a cooling plant. To ensure that the molding machine runs properly and is cooled sufficiently, the return-pipe temperature has to be kept at a constant level, t_r = 68 °F (20 °C). The solution is a speed-controlled pump, controlled by a PI controller. The PI controller compares the required temperature, t_{set}, with the actual return-pipe temperature, t_r, which is measured by a temperature transmitter TT. This system has a fixed system characteristic, and therefore the duty point of the pump is located on the curve between Q_{min} and Q_{max}. The higher the heat loss in the machine, the higher the flow of cooling water needed to ensure that the return-pipe temperature is kept at a constant level of 68 °F (20 °C).

Product range, CRE

Range	CRE 1s	CRE 1	CRE 3	CRE 5	CRE 10	CRE 15	CRE 20
Rated flow rate [US gpm (m^3h)]	4.5 (1.0)	8.5 (1.9)	15 (3.4)	30 (6.8)	55 (12.5)	95 (21.6)	110 (25.0)
Temperature range [°F (°C)]	-4 to +250 (-20 to +121)						
Temperature range [°F (°C)] - on request	-40 to +356 (-40 to +180)						
Maximum working pressure [psi (bar)]	362 (25)						
Maximum pump efficiency [%]	35	49	59	67	70	72	72
Flow range [US gpm (m^3h)]	0 - 5.7 (0 - 1.3)	0 - 12.8 (0 - 2.9)	0 - 23.8 (0 - 5.4)	0-45 (0 - 10.2)	0-70 (0 - 15.9)	0-125 (0 - 28.4)	0-155 (35.2)
Maximum pump pressure (H [ft (m)])	760 (230)	790 (240)	790 (240)	780 (237)	865 (263)	800 (243)	700 (213)
Motor power [HP (kW)]	1/3 to 2 (0.25 to 1.50)	1/3 to 3 (0.25 to 2.20)	1/3 to 5 (0.25 to 4.00)	3/4 to 7.5 (0.55 to 5.50)	3/4 to 15 (0.55 to 11.00)	2 to 25 (1.50 to 18.50)	3 to 25(2.20 to 18.50)
Version							
CRE: Cast iron and stainless steel AISI 304	●	●	●	●	●	●	●
CRIE: Stainless steel AISI 304	●	●	●	●	●	●	●
CRNE: Stainless steel AISI 316	●	●	●	●	●	●	●
CRTE: Titanium	-	-	(CRTE 2)	(CRTE 4)	(CRTE 8)	(CRTE 16)	-

Range	CRE 32	CRE 45	CRE 64	CRE 95	CRE 125	CRE 155
Rated flow rate [US gpm (m^3h)]	140 (32)	220 (50)	340 (77)	500 (114)	660 (150)	821 (186)
Temperature range [°F (°C)]	-22 to +250 (-30 to +121)[1]			-22 to +250 (-30 to +121)[2]		
Temperature range [°F (°C)] - on request	-40 to +356 (-40 to +180)			-	-	-
Maximum working pressure [psi (bar)]	435 (30)			537[3]	566[3]	580[3]
Maximum pump efficiency [%]	76	78	79	80	78	81
Flow range [US gpm (m^3h)]	14-210 (3.2 - 47.7)	22-310 (5.0 - 70.0)	34-450 (7.7 - 102.2)	65-650 (14.7 - 147.6)	86-851 (19.5 -193)	107 - 1070 (24.3 - 243)
Maximum pump pressure (H [ft (m)])	720 (220)	490 (149)	330 (101)	250 (76.2)	234 (71.3)	145 (44.1)
Motor power [HP (Kw)]	5-30 (4 - 22)	7.5-30 (5.5 - 22)	10-30 (7.5 - 22)	15-30 (11 - 22)	20-30 (15 - 22)	25 (18.5)
Version						
CRE: Cast iron and stainless steel AISI 304	●	●	●	●	●	●
CRIE: Stainless steel AISI 304	-	-	-	-	-	-
CRNE: Stainless steel AISI 316	●	●	●	●	●	●
CRTE: Titanium	-	-	-	-	-	-

● Available.

1) CRNE 32 to CRNE 64 with HQQE shaft seal: -4 to +250 °F (-20 to +121 °C).

2) CRNE 95 to 155 with HQQE shaft seal: -40 to +248 °F (-40 to +120 °C)

3) CRE pumps: Maximum operating pressure is 363 psi (25 bar).

Pump

The CRE pumps are non-self-priming, vertical, multistage centrifugal pumps.

The pumps are available with a Grundfos standard motor (CR pumps) or a Grundfos frequency-controlled motor (CRE pumps).

The pump consists of a pump head and a base. The chamber stack and the sleeve are secured between the pump head and the base by means of staybolts. The base has inlet and outlet ports on the same level (in line). All pumps are fitted with a maintenance-free mechanical shaft seal of the cartridge type.

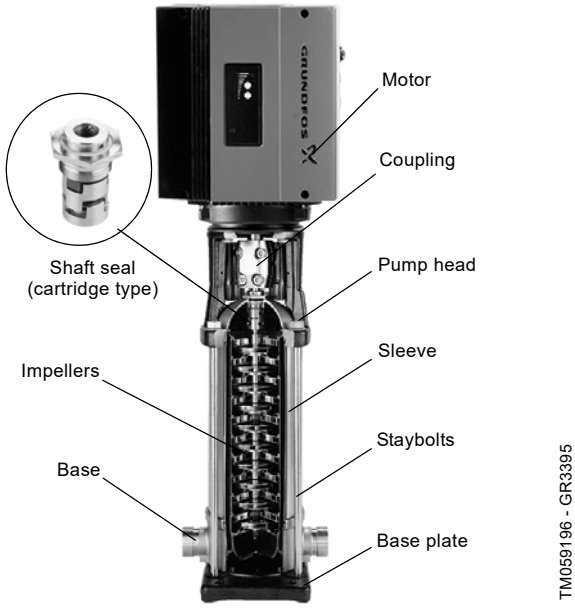

Fig. 7 CR pump

A CRE pump with ANSI/NSF 61 listing is available. See UL file MH26400 or contact Grundfos.

Motor

MLE motors

MLE motors incorporate thermal protection against slow overload and blocking.

CRE, CRIE and CRNE pumps require no external motor protection.

Frequency-controlled MLE motors

CRE, CRIE and CRNE pumps are fitted with a totally enclosed, fan-cooled, frequency-controlled MLE motor.

Permanent-magnet motors

From 1/2 to 2 HP (0.37 to 1.5 kW), Grundfos offers CRE pumps fitted with single-phase MLE motors (1 x 200-240 V).

From 1 to 15 HP (0.75 to 11 kW), Grundfos offers CRE pumps fitted with three-phase MLE motors (3 x 440-480 V).

From 1 1/2 to 7 1/2 HP (1.1 to 5.5 kW), Grundfos offers CRE pumps fitted with three-phase MLE motors (3 x 200-240 V).

Asynchronous motors

From 20 to 30 HP (15 to 22), Grundfos offers CRE pumps fitted with three-phase MLE motors (3 x 460-480 V).

See Grundfos Product Center at www.grundfos.com.

Electrical data

	MLE motor CRE, CRIE, CRNE
Mounting designation	NEMA
Insulation class	F
Efficiency	See *Motor data* on page 93
Enclosure class	TEFC (Totally Enclosed Fan-Cooled)
Supply voltage Tolerance: - 10 %/+ 10 %	1/2 to 2 HP (0.37 to 1.5 kW): 1 x 200-240 V 1 to 15 HP (0.75 to 11 kW): 3 x 440-480 V 20 to 30 HP (15 to 22 kW): 3 x 460-480 V 1 1/2 to 7 1/2 HP (1.1 to 5.5 kW): 3 x 200-240 V

MLE 1/2 to 15 HP (0.37 to 11 kW) permanent-magnet motors

Supply voltage

- 1/2 to 2 HP (0.37 to 1.5 kW) (1 x 200-240 V)
- 1 1/2 to 7 1/2 HP (1.1 to 5.5 kW) (3 x 200-240 V)
- 1 to 15 HP (0.75 to 11 kW) (3 x 440-480 V)

Advanced functional module (FM 300)

The FM 300 is the standard functional module in all MLE motors 1/2 to 15 HP (0.37 to 11 kW).

The module has a number of inputs and outputs enabling the motor to be used in advanced applications where many inputs and outputs are required.

The FM 300 has these connections:

- three analog inputs
- one analog output
- two dedicated digital inputs
- two configurable digital inputs or open-collector outputs
- Grundfos Digital Sensor input and output
- two Pt100/1000 inputs
- two LiqTec sensor inputs
- two signal relay outputs
- GENIbus connection.

Connection terminals

CRE, CRIE, CRNE pumps have a number of inputs and outputs enabling the pumps to be used in advanced applications where many inputs and outputs are required.

Functional module 300 has been selected as standard for CRE, CRIE and CRNE pumps.

See fig. 8.

As a precaution, the wires to be connected to the following connection groups must be separated from each other by reinforced insulation in their entire lengths.

Inputs and outputs

- Start/stop (digital input 1) (terminals 2 and 6)
- pressure sensor (analog input 1) (terminals 4 and 8)
- pressure switch (digital input 3) (terminals 10 and 6)
- external analog signal input (analog input 2) (terminals 7 and 23)
- GENIbus (terminals A, Y and B).

All inputs and outputs are internally separated from the power-conducting parts by reinforced insulation and galvanically separated from other circuits.

All control terminals are supplied by protective extra-low voltage (PELV), thus ensuring protection against electric shock.

Signal relay outputs

– Signal relay 1: LIVE: Power supply voltages up to 250 VAC can be connected to this output. PELV: The output is galvanically separated from other circuits. Therefore, the supply voltage or protective extra-low voltage can be connected to the output as desired.

– Signal relay 2: PELV: The output is galvanically separated from other circuits. Therefore, the supply voltage or protective extra-low voltage can be connected to the output as desired.

Power supply (terminals N, PE, L or L1, L2, L3, PE)

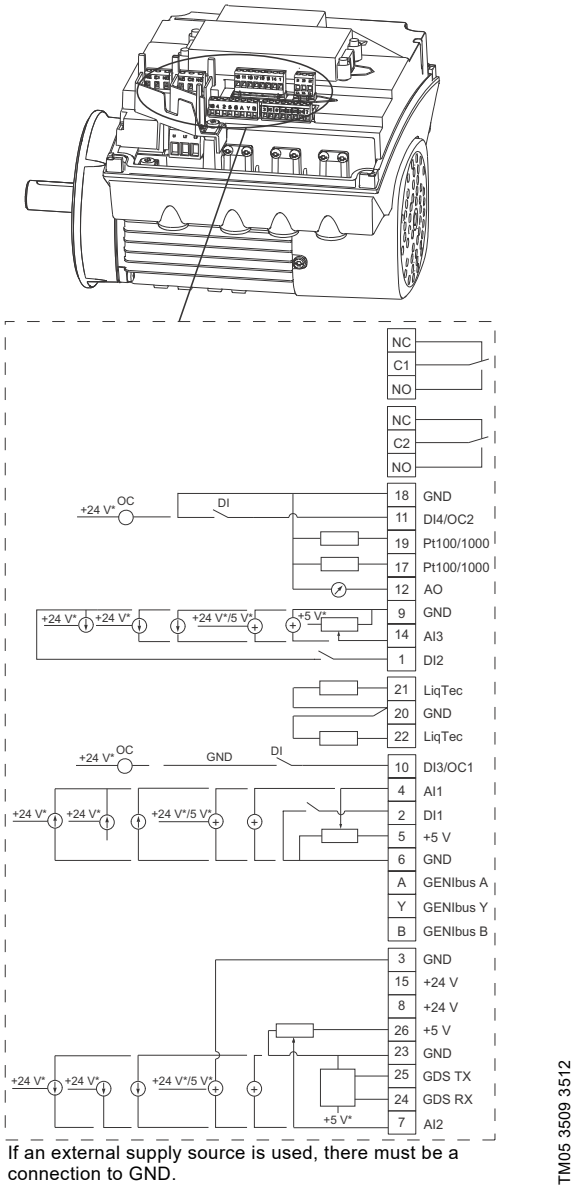

* If an external supply source is used, there must be a connection to GND.

Fig. 8 Connection terminals, FM 300 functional module

MLE 20 to 30 HP (15 to 22 kW) asynchronous motors

Supply voltage

20 to 30 HP (15 to 22 kW) (3 x 460-480 V)

Advanced I/O module

The advanced I/O module is the standard functional module in these MLE motors.

The module has a number of inputs and outputs enabling the motor to be used in advanced applications where many inputs and outputs are required.

The Advanced I/O module has these connections:

- start/stop terminals
- three digital inputs
- one setpoint input
- one sensor input (feedback sensor)
- one sensor 2 input
- one analog output
- two Pt100 inputs
- two signal relay outputs
- GENIbus connection.

Connection terminals

As a precaution, the wires to be connected to the following connection groups must be separated from each other by reinforced insulation in their entire lengths.

Inputs and outputs

- Start/stop (terminals 2 and 3)
- digital inputs (terminals 1 and 9, 10 and 9, 11 and 9)
- sensor input 2 (terminals 14 and 15)
- Pt100 sensor inputs (terminals 17, 18, 19 and 20)
- setpoint input (terminals 4, 5 and 6)
- sensor input (terminals 7 and 8)
- GENIbus (terminals B, Y and A).

All inputs are internally separated from the power-conducting parts by reinforced insulation and galvanically separated from other circuits.

All control terminals are supplied with protective extra-low voltage (PELV), thus ensuring protection against electric shock.

Output (relay signal, terminals NC, C, NO)

The output is galvanically separated from other circuits.

Therefore, the supply voltage or protective extra-low voltage can be connected to the output as desired.

- Analog output (terminal 12 and 13).

Power supply (terminals L1, L2, L3)

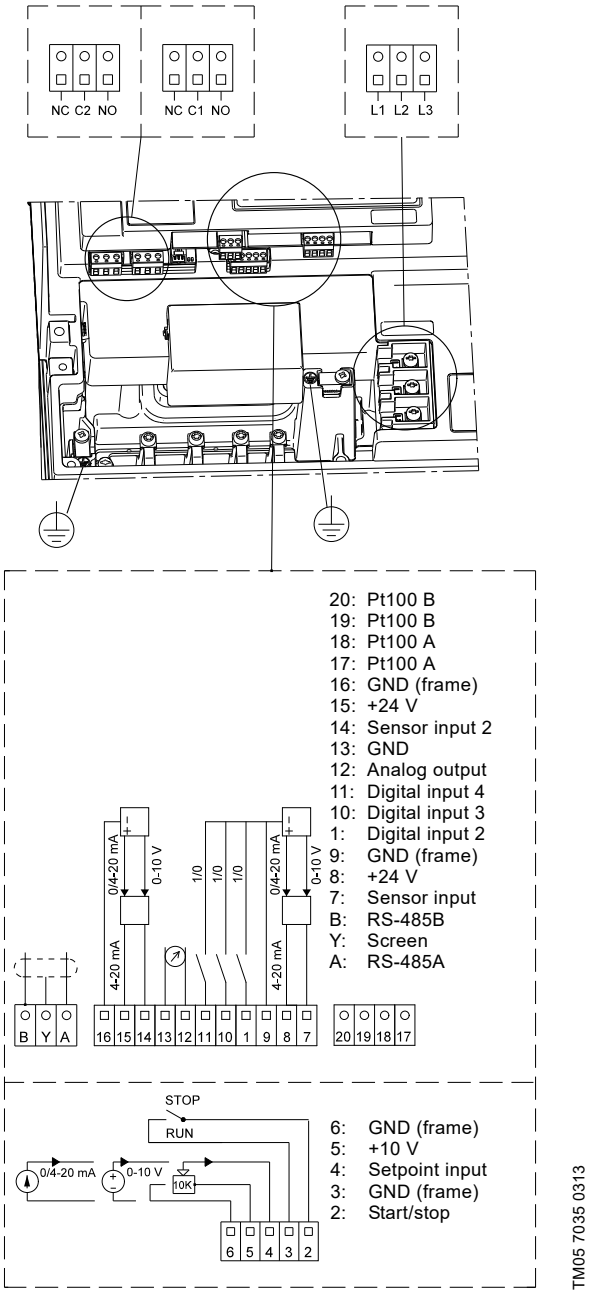

Fig. 9 Connection terminals, Advanced I/O module

Terminal box positions

As standard, the terminal box is fitted on the inlet side of the pump.

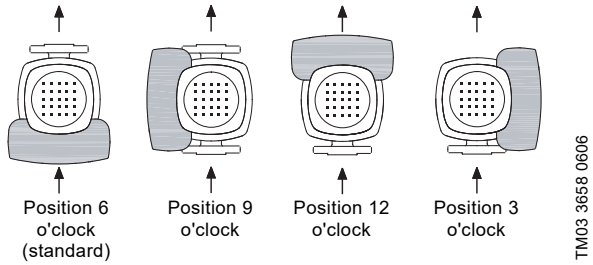

Fig. 10 Terminal box positions

Ambient temperature

MLE motor power [HP (kW)]	Motor make	Voltage [V]	Max. ambient temp. [°F (°C)]	Max. altitude above sea level [ft (m)]
1/2 to 2 (0.37 to 1.5)	MLE	1 x 200-240	122 (50)	3280 (1000)
1 to 15 (0.75 to 1.1)	MLE	3 x 440-480	122 (50)	
1 1/2 to 7 1/2 (1.1 to 5.5)	MLE	3 x 200-240	104 (40)	
20 to 30 (15 to 22)	MLE	3 x 460-480	104 (40)	

If the ambient temperature exceeds the above maximum ambient temperatures or the pump is installed at an altitude exceeding 3280 ft (1000 m), the motor must not be fully loaded due to the risk of overheating. Overheating may result from excessive ambient temperatures or high altitudes.

In such cases, it may be necessary to use a motor with a higher rated output.

Viscosity

The pumping of liquids with densities or kinematic viscosities higher than those of water will cause a considerable pressure drop, a drop in the hydraulic performance and a rise in the power consumption.

In such situations, fit the pump with a larger motor. If in doubt, contact Grundfos.

Installation altitude

Installation altitude is the height above sea level of the installation site. Motors installed up to 3280 ft (1000 m) above sea level can be loaded 100 %.

Motors installed more than 3280 ft (1000 m) above sea level must not be fully loaded due to the low density and consequently low cooling effect of the air.

MLE permanent-magnet motors

- 1/2 to 2 HP (0.37 to 1.5 kW) (1 x 200-240 V)
- 1 1/2 to 7 1/2 HP (1.1 to 5.5 kW) (3 x 200-240 V)
- 1 to 15 HP (0.75 to 11 kW) (3 x 440-480 V)

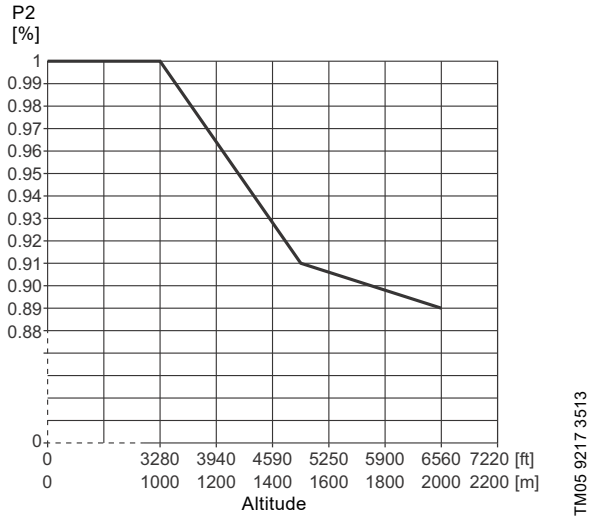

Fig. 11 Derating of motor output (P2) in relation to altitude above sea level

MLE asynchronous motors

- 20 to 30 HP (15 to 22 kW) (3 x 460-480 V)

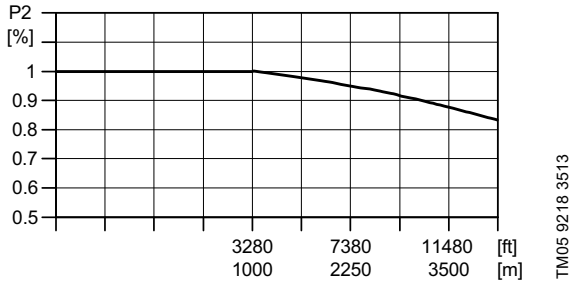

Fig. 12 Derating of motor output (P2) in relation to altitude above sea level

2. MLE technical data

Grundfos MLE motors are equipped with NEMA standard C-face flanges.

Grundfos MLE motors are recognized under the Component Recognition Program of Underwriters Laboratories Inc. for the United States and Canada.

MLE motors are equipped with a reinforced bearing system with locked bearings at the drive end, either a deep-groove ball bearing or an angular-contact bearing depending on the motor model.

This ensures an even uptake of the load in order to maximize the lifetime of the bearings, which are guaranteed for a minimum of 18,000 hours service life. At the non-drive end, the motors are fitted with bearings with axial clearance in order to meet production tolerances while allowing for thermal expansion during motor operation. This ensures trouble-free operation and long life.

MLE 1/2 to 2 HP (0.37 to 1.5 kW) permanent-magnet motors

(2-pole) 1/60/200-240

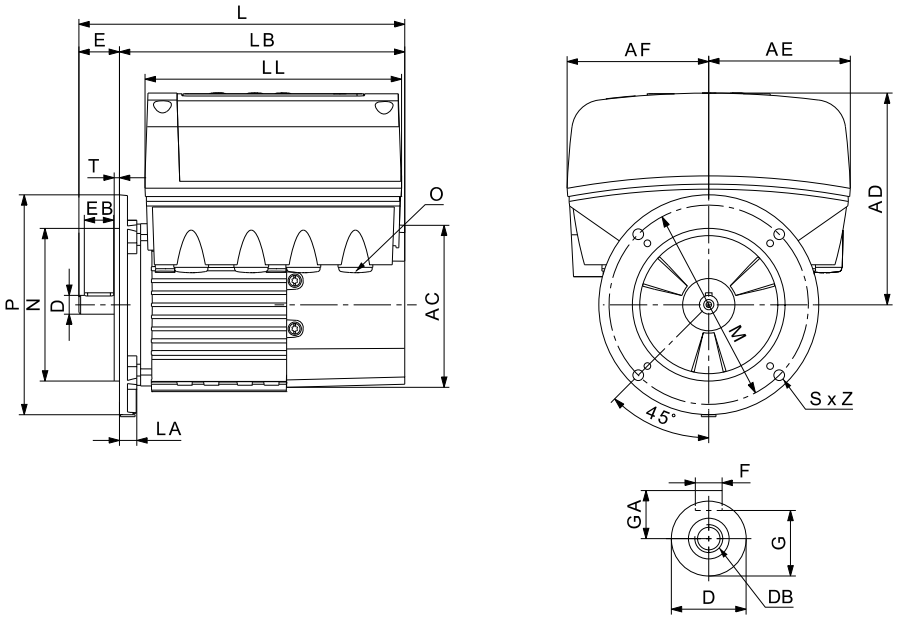

2-pole dimensional data

Power [HP (kW)]	NEMA frame	Stator housing [inches (mm)]							Shaft end [inches (mm)]
		AC	AD	AF	L	LB	LL	D	E
1/2 (0.37)	56C	4.80 (122)	6.22 (158)	4.17 (106)	10.55 (268)	8.46 (215)	7.56 (192)	0.63 (15.9)	2.06 (52.3)
3/4 (0.55)									
1 (0.75)									
1 1/2 (1.1)									
2 (1.5)		4.80 (122)	6.22 (158)	4.17 (106)	11.34 (288)	9.25 (235)	7.56 (192)	0.63 (15.9)	2.06 (52.3)

Power [HP (kW)]	NEMA Frame	Flange [inches (mm)]						Cable entries [mm]
		LA	M	N	P	S	T	O
1/2 (0.37)	56C	0.63 (16)	5.87 (149.2)	4.50 (114.3)	6.50 (165)	3/8"	0.16 (4)	1/2" NPT (4)
3/4 (0.55)								
1 (0.75)								
1 1/2 (1.1)								
2 (1.5)		1.42 (36)	5.87 (149.2)	4.50 (114.3)	6.50 (165)	3/8"	0.16 (4)	1/2" NPT (4)

MLE 1 to 15 HP (0.75 to 11 kW) permanent-magnet motors

(2-pole) 3/60/440-480

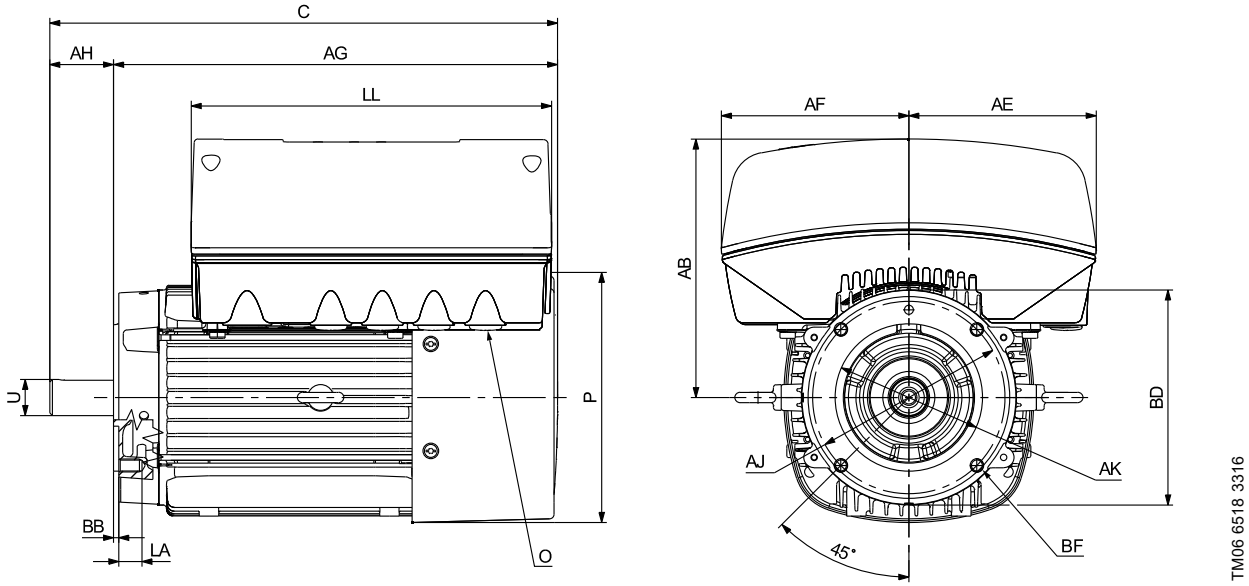

Dimensional data

Power [HP (kW)]	NEMA frame	Stator housing [inches (mm)]							Shaft end [inches (mm)]	
		P	AB	AE	AF	C	AG	LL	U	AH
1 (0.75)	56C	4.80 (122)	6.22 (158)	5.28 (134)	5.28 (134)	12.13 (308)	10.04 (255)	9.13 (232)	0.63 (15.9)	2.06 (52.3)
1 1/2 (1.1)		4.80 (122)	6.22 (158)	5.28 (134)	5.28 (134)	12.13 (308)	10.04 (255)	9.13 (232)	0.63 (15.9)	2.06 (52.3)
2 (1.5)		4.80 (122)	6.22 (158)	5.28 (134)	5.28 (134)	12.91 (328)	10.83 (275)	9.13 (232)	0.63 (15.9)	2.06 (52.3)
3 (2.2)	182TC	4.80 (122)	6.22 (158)	5.28 (134)	5.28 (134)	13.46 (342)	10.83 (275)	9.13 (232)	1.13 (28.6)	2.62 (66.6)
5 (4)		7.53 (191.3)	7.91 (201)	5.73 (145.5)	5.73 (145.5)	15.89 (403.6)	13.15 (334)	11.02 (280)	1.13 (28.6)	2.74 (69.6)
7 1/2 (5.5)	213TC	7.53 (191.3)	7.91 (201)	5.73 (145.5)	5.73 (145.5)	17.75 (450.9)	14.37 (365)	11.02 (280)	1.37 (34.9)	3.38 (85.9)
10 (7.5)		10.04 (254.9)	9.33 (237)	6.81 (173)	6.81 (173)	18.70 (474.9)	15.31 (389)	12.48 (317)	1.37 (34.9)	3.38 (85.9)
15 (11)	254TC	10.04 (254.9)	9.33 (237)	6.81 (173)	6.81 (173)	19.74 (501.3)	15.98 (406)	12.48 (317)	1.63 (41.3)	3.75 (95.3)

Power [HP (kW)]	NEMA frame	Flange [inches (mm)]						Cable entries [mm]
		LA	AJ	AK	BD	BF	BB	O
1 (0.75)	56C	0.63 (16)	5.87 (149.2)	4.50 (114.3)	6.50 (165)	3/8"	0.16 (4)	1/2" NPT (4)
1 1/2 (1.1)		0.63 (16)	5.87 (149.2)	4.50 (114.3)	6.50 (165)	3/8"	0.16 (4)	1/2" NPT (4)
2 (1.5)		1.42 (36)	5.87 (149.2)	4.50 (114.3)	6.50 (165)	3/8"	0.16 (4)	1/2" NPT (4)
3 (2.2)	182TC	0.51 (13)	7.25 (184.2)	-	8.50 (215.9)	1/2"	-	1/2" NPT (4)
5 (4)		0.75 (19)	7.25 (184.5)	8.50 (215.9)	8.50 (215.9)	1/2" - 13	0.25 (6.35)	1/2" NPT (5)
7 1/2 (5.5)	213TC	0.75 (19)	7.25 (184.15)	8.50 (215.9)	8.50 (215.9)	1/2" - 13	0.25 (6.35)	1/2" NPT (5)
10 (7.5)		0.79 (20)	7.25 (184.15)	8.50 (215.9)	8.68 (220.5)	1/2" - 13	0.25 (6.35)	3/4" NPT (1) & 1/2" NPT (5)
15 (11)	254TC	0.79 (20)	7.25 (184.15)	8.50 (215.9)	8.68 (220.5)	1/2" - 13	0.25 (6.35)	3/4" NPT (1) & 1/2" NPT (5)

MLE 1 1/2 to 7 1/2 HP (1.1 to 5.5 kW) permanent-magnet motors

(2-pole) 3/60/200-240

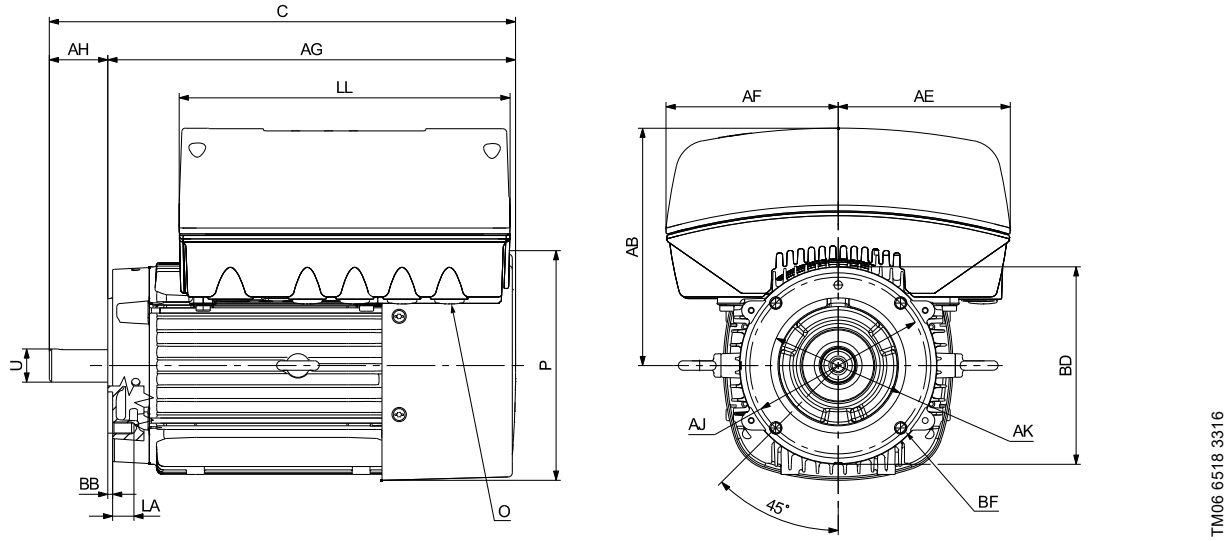

Dimensional data

Power [HP (kW)]	NEMA frame	Stator housing [inches (mm)]							Shaft end [inches (mm)]	
		P	AB	AE	AF	C	AG	LL	U	AH
1 1/2 (1.1) 2 (1.5)	56C	4.80 (122)	6.22 (158)	5.28 (134)	5.28 (134)	12.13 (308) 12.91 (328)	10.04 (255) 10.83 (275)	9.13 (232)	0.63 (15.9)	2.06 (52.3)
3 (2.2)	182TC	7.53 (191.3)	7.91 (201)	5.73 (145.5)	5.73 (145.5)	15.89 (408)	13.15 (334)	11.02 (280)	1.13 (28.6)	2.74 (69.6)
5 (4)	182TC	7.53 (191.3)	7.91 (201)	5.73 (145.5)	5.73 (145.5)	15.89 (464)	13.15 (334)	11.02 (280)	1.13 (28.6)	2.74 (69.6)
7 1/2 (5.5)	213TC	10.04 (254.9)	9.33 (237)	6.81 (173)	6.81 (173)	18.70 (476)	15.31 (389)	12.48 (317)	1.37 (34.9)	3.38 (85.9)

Power [HP (kW)]	NEMA frame	Flange [inches (mm)]						Cable entries [mm]
		LA	AJ	AK	BD	BF	BB	O
1 1/2 (1.1) 2 (1.5)	56C	0.63 (16) 1.42 (36)	5.87 (149.2)	4.5 (114.3)	6.50 (165)	3/8 "	0.16 (4)	1/2" NPT (4)
3 (2.2)	182TC	0.75 (19)	7.25 (184.15)	8.50 (215.9)	8.50 (215.9)	1/2"-13	0.25 (6.35)	1/2" NPT (5)
5 (4)	182TC	0.75 (19)	7.25 (184.15)	8.50 (215.9)	8.50 (215.9)	1/2"-13	0.25 (6.35)	1/2" NPT (5)
7 1/2 (5.5)	213TC	0.79 (20)	7.25 (184.15)	8.50 (215.9)	8.68 (220.5)	1/2"-13	0.25 (6.35)	3/4" NPT (1) & 1/2" NPT (5)

MLE 20 to 30 HP (15 to 22 kW) asynchronous motors

(2-pole) 3/60/460-480

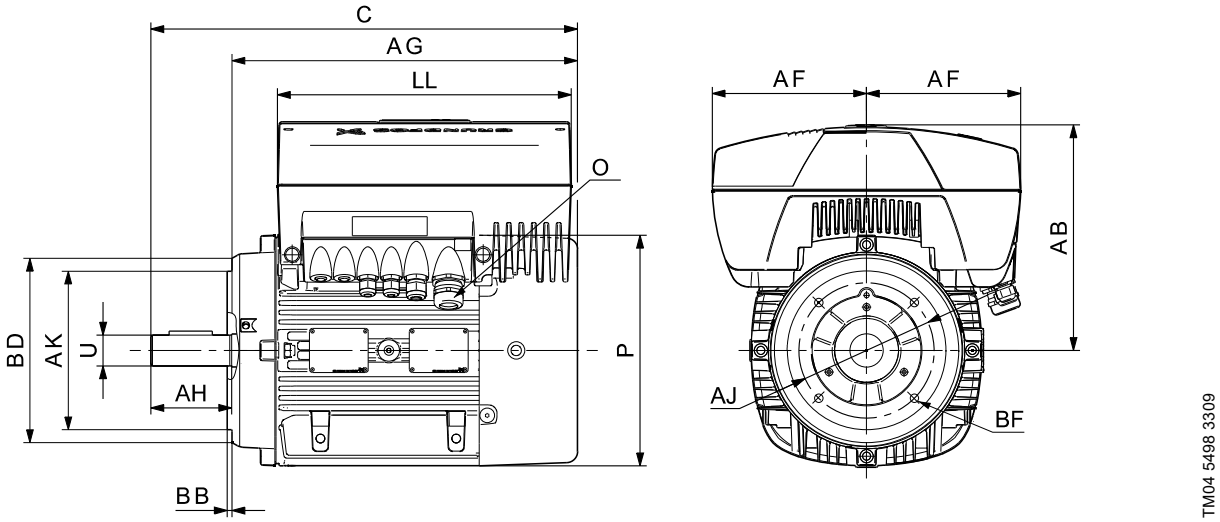

Dimensional data

Power [HP (kW)]	Nema frame	Stator housing [inches (mm)]							Shaft end [inches]	
		P	AB	AF	AF	C	AG	LL	U	AH
20 (15)	256TC	13.54 (344)	12.13 (308)	8.27 (210)	8.27 (210)	22.99 (584)	19.21 (488)	15.75 (400)	1.62 (41)	3.75 (95)
25 (18.5)	284TC	13.54 (344)	12.13 (308)	8.27 (210)	8.27 (210)	24.96 (634)	23.15 (588)	15.75 (400)	1.62 (41)	3.75 (95)
30 (22)	286TC	13.54 (344)	12.13 (308)	8.27 (210)	8.27 (210)	24.96 (634)	23.15 (588)	15.75 (400)	1.62 (41)	3.75 (95)

Power [HP (kW)]	Nema frame	Flange [inches (mm)]					Cable entries [mm]
		AJ	AK	BD	BF	BB	O
20 (15)	256TC	7.25 (184)	8.50 (216)	9.88 (251)	1/2"	0.26 (7)	1 x M40 + 1 x M20 + 2 x M16 + 2 x knock out M16
25 (18.5)	284TC	9.00 (229)	10.50 (267)	10.75 (273)	1/2"	0.32 (8)	1 x M40 + 1 x M20 + 2 x M16 + 2 x knock out M16
30 (22)	286TC	9.00 (229)	10.50 (267)	10.75 (273)	1/2"	0.32 (8)	1 x M40 + 1 x M20 + 2 x M16 + 2 x knock out M16

MLE motors for CRE-H and CRNE-H

(C-Face mounting with foot)

GR9035

Dimensional sketch

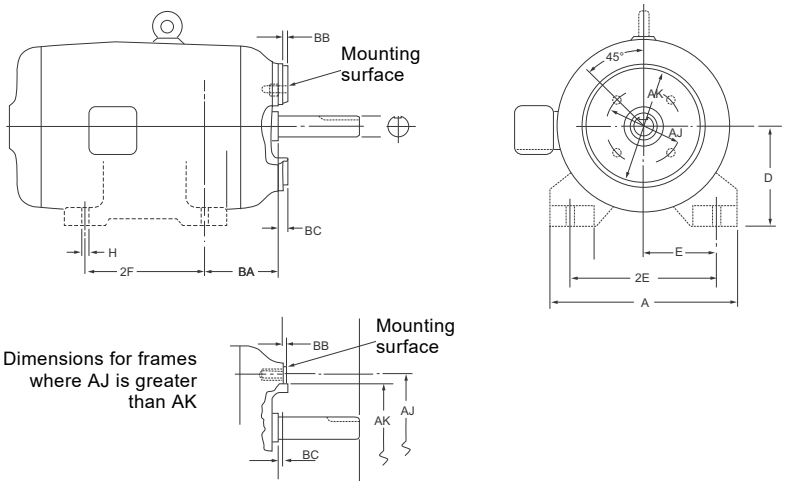

TM05 3012 0812

Dimensional data

Power [HP (kW)]	Phase	NEMA frame size	Foot dimensions [inches (mm)]						
			A	D	E	2E	2F	BA + BC	H
1-phase 2-pole MLE motor with foot									
1/2 (0.37)	1	56C	6.00 (153)	3.50 (89)	2.44 (62)	4.88 (124)	3.00 (76)	2.56 (65)	0.34 (8.6)
3/4 (0.55)	1	56C	6.00 (153)	3.50 (89)	2.44 (62)	4.88 (124)	3.00 (76)	2.56 (65)	0.34 (8.6)
1 (0.75)	1	56C	6.00 (153)	3.50 (89)	2.44 (62)	4.88 (124)	3.00 (76)	2.56 (65)	0.34 (8.6)
1 1/2 (1.1)	1	56C	6.00 (153)	3.50 (89)	2.44 (62)	4.88 (124)	3.00 (76)	2.56 (65)	0.34 (8.6)
2 (1.5)	1	56C	6.00 (153)	3.50 (89)	2.44 (62)	4.88 (124)	3.00 (76)	2.56 (65)	0.34 (8.6)
3-phase 2-pole MLE motor with foot									
1 (0.75)	3	56C	6.00 (153)	3.50 (89)	2.44 (62)	4.88 (124)	3.00 (76)	2.56 (65)	0.34 (8.6)
1 1/2 (1.1)	3	56C	6.00 (153)	3.50 (89)	2.44 (62)	4.88 (124)	3.00 (76)	2.56 (65)	0.34 (8.6)
2 (1.5)	3	56C	6.00 (153)	3.50 (89)	2.44 (62)	4.88 (124)	3.00 (76)	2.56 (65)	0.34 (8.6)
3 (2.2)	3	182TC	8.90 (226)	4.50 (114)	3.75 (95)	7.50 (191)	4.50 (114)	2.87 (73)	0.41 (10)
5 (4)	3	184TC	8.90 (226)	4.50 (114)	3.75 (95)	7.50 (191)	5.50 (140)	2.87 (73)	0.41 (10)
7 1/2 (5.5)	3	215TC	9.96 (253)	5.25 (133)	4.25 (108)	8.50 (216)	7.00 (178)	3.75 (95)	0.41 (10)
10 (7.5)	3	215TC	9.60 (244)	5.25 (133)	4.25 (108)	8.50 (216)	7.00 (178)	3.75 (95)	0.41 (10)
15 (11)	3	254TC	11.30 (287)	6.25 (159)	5.00 (127)	10.00 (254)	8.25 (210)	4.50 (114)	0.53 (13)
20 (15)	3	256TC	11.30 (287)	6.25 (159)	5.00 (127)	10.00 (254)	10.00 (254)	4.50 (114)	0.53 (13)
25 (18.5)	3	284TSC	12.30 (312)	7.00 (178)	5.50 (140)	11.00 (279)	9.50 (241)	5.00 (127)	0.53 (13)
30 (22)	3	286TSC	12.30 (312)	7.00 (178)	5.50 (140)	11.00 (279)	11.00 (279)	5.00 (127)	0.53 (13)

3. Control of E-pumps

CRE, CRIE and CRNE pumps are the ideal choice for a number of applications characterized by a demand for variable flow at constant pressure. The pumps are suited for water supply systems and pressure boosting as well as for industrial applications.

Depending on the application, the pumps offer energy savings, increased comfort and improved processing.

E-pumps in the service of industry

The industry uses a large number of pumps in many different applications. Demands on pumps in terms of pump performance and mode of operation make speed control a must in many applications.

E-pumps are ideal for and often used in the situations listed below.

Constant pressure

- Water supply
- washing and cleaning systems
- distribution from waterworks
- humidifying systems
- water treatment systems
- process boosting systems, etc.

Example: Within industrial water supply, E-pumps with an integrated pressure sensor are used to ensure a constant pressure in the pipe system. From the sensor, the E-pump receives inputs about changes of pressure as a result of changes in the consumption. The E-pump responds to the input by adjusting the speed until the pressure is equalized. The constant pressure is stabilized once more on the basis of the preset setpoint.

Constant temperature

- Air-conditioning systems in industrial plants
- industrial cooling systems
- industrial freezing systems
- casting and molding tools, etc.

Example: In industrial freezing systems, E-pumps with a temperature sensor increase comfort and lower operating costs compared with pumps without a temperature sensor.

An E-pump continuously adapts its performance to the changing demands reflected in the differences in temperature of the liquid circulating in the freezing system. Thus, the lower the demand for cooling, the smaller the quantity of liquid circulated in the system and vice versa.

Constant level

- Boiler feed systems
- condensate systems
- sprinkler irrigation systems
- chemical industry, etc.

Example: In a steam boiler, it is important to be able to monitor and control pump operation to maintain a constant level of water in the boiler.

By using an E-pump with a level sensor in the boiler, it is possible to maintain a constant water level.

A constant water level ensures optimum and cost-efficient operation as a result of a stable steam production.

Dosing applications

- Chemical industry, that is control of pH values
- petrochemical industry
- paint industry
- degreasing systems
- bleaching systems, etc.

Example: In the petrochemical industry, E-pumps with a pressure sensor are used as dosing pumps.

The E-pumps help to ensure that the correct mixture ratio is achieved when more liquids are combined.

E-pumps functioning as dosing pumps improve processing and offer energy savings.

E-pumps in commercial building services

Commercial building services use E-pumps to maintain a constant pressure or a constant temperature based on a variable flow rate.

Constant pressure

Water supply in high-rise buildings, such as office buildings and hotels.

Example: E-pumps with a pressure sensor are used for water supply in high-rise buildings to ensure a constant pressure even at the highest draw-off point.

As the consumption pattern and thus the pressure changes during the day, the E-pump continuously adapts its performance until the pressure is equalized.

Constant temperature

- Air-conditioning systems in hotels, schools, etc.
- building cooling systems, etc.

Example: E-pumps are an excellent choice for buildings where a constant temperature is essential. E-pumps keep the temperature constant in air-conditioned, high-rise glass buildings, irrespective of the seasonal fluctuations of the outdoor temperature and various heat impacts inside the building.

Control options

It is possible to communicate with CRE, CRIE, CRNE pumps via the following platforms:

- the operating panel on the pump
- Grundfos GO Remote
- a central management system.

The purpose of controlling an E-pump is to monitor and control the pressure, temperature, flow rate and liquid level of the system.

Operating panel on the pump

The operating panel on the E-pump terminal box makes it possible to change the setpoint settings manually.

MLE permanent-magnet motors

- 1/2 to 2 HP (0.37 to 1.5 kW) (1 x 200-240 V) 1 1/2 to 7 1/2 HP (1.1 to 5.5 kW) (3 x 200-240 V)
- 1 to 15 HP (0.75 to 11 kW) (3 x 440-480 V)

The operating condition of the pump is indicated by the Grundfos Eye on the operating panel. See fig. 13.

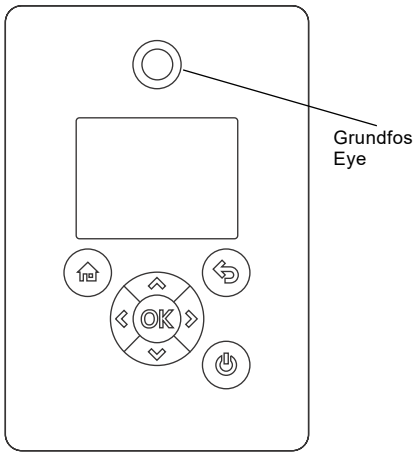

Fig. 13 Operating panel on CRE pump

MLE asynchronous motors

- 20 to 30 HP (15 to 22 kW) (3 x 460-480 V)

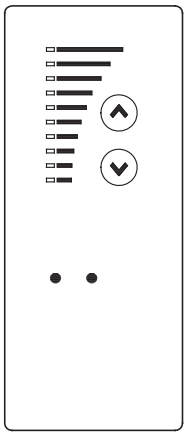

Fig. 14 Operating panel on CRE pump

Grundfos GO Remote

The pump is designed for wireless radio or infrared communication with Grundfos GO Remote.

Grundfos GO Remote enables the setting of functions and gives access to status overviews, technical product information and actual operating parameters.

Grundfos GO Remote offers three different mobile interfaces (MI).

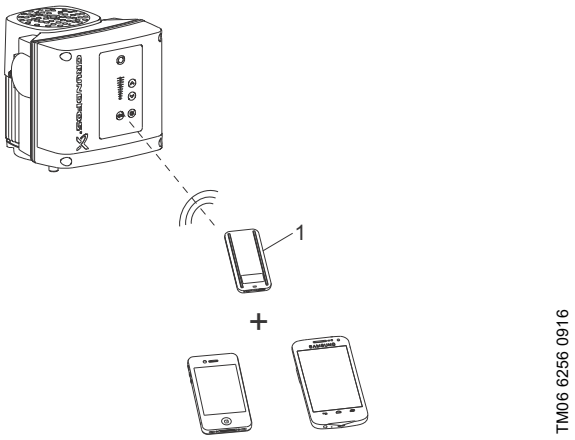

Fig. 15 Grundfos GO Remote communicating with the pump via radio or infrared connection (IR)

Pos.	Description
1	Grundfos MI 204: Add-on module enabling radio or infrared communication. You can use MI 204 in conjunction with an Apple iPhone or iPod with Lightning connector, e.g., fifth generation or later iPhone or iPod. MI 204 is also available together with an Apple iPod touch and a cover.
2	Grundfos MI 301: Separate module enabling radio or infrared communication. You can use MI 301 in conjunction with an Android or an iOS-based smart device with Bluetooth connection.

Central management system

Communication with the E-pump is possible even if the operator is not present near the E-pump. Communication is enabled by connecting the E-pump to a central management system. This allows the operator to monitor the pump and to change control modes and setpoint settings.

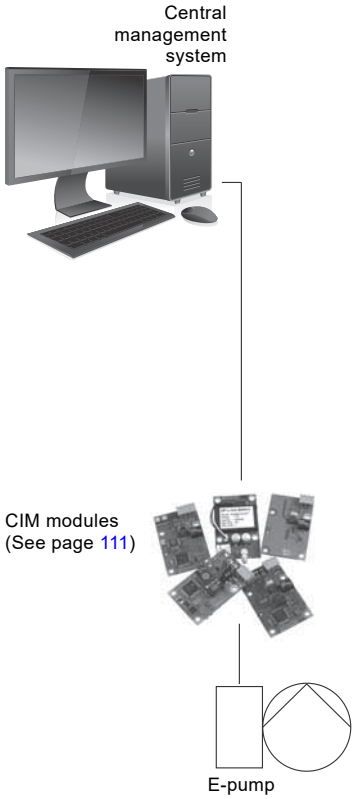

TM06 7627 3716

Fig. 16 Structure of a central management system

Control modes for E-pumps

Grundfos CRE, CRIE and CRNE pumps are available in two variants:

- CRE, CRIE and CRNE with an integrated pressure sensor
- CRE, CRIE and CRNE without a sensor.

CRE, CRIE and CRNE with an integrated pressure sensor

Use CRE, CRIE and CRNE pumps with an integrated pressure sensor in applications where you want to control the pressure after the pump, irrespective of the flow rate. For further information, see *Control of E-pumps* on page 19.

Signals of pressure changes in the pipe system are transmitted continuously from the sensor to the pump. The pump responds to the signals by adjusting its performance up or down to compensate for the pressure difference between the actual and the desired pressure. As this adjustment is a continuous process, a constant pressure is maintained in the pipe system.

TM06 9851 0817

Fig. 17 CRE, CRIE and CRNE pumps

A CRE, CRIE or CRNE pump with an integrated pressure sensor facilitates installation and commissioning.

CRE, CRIE and CRNE pumps with an integrated pressure sensor can be set to either of these control modes:

- constant pressure (factory setting)
- constant curve.

In constant-pressure mode, the pump maintains a preset pressure after the pump, irrespective of the flow rate. See fig. 18.

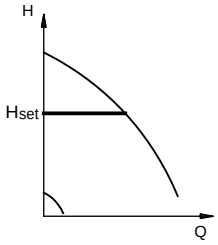

Fig. 18 Constant-pressure mode

In constant-curve mode, the pump is not controlled. It can be set to pump according to a preset pump characteristic curve within the range from minimum curve to maximum curve. See fig. 19.

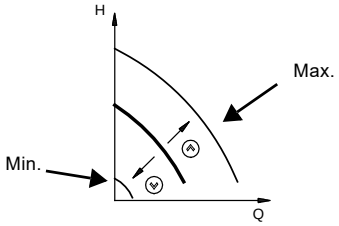

Fig. 19 Constant-curve mode

CRE, CRIE and CRNE without a sensor

CRE, CRIE and CRNE pumps without a sensor are suitable in these situations:

- Uncontrolled operation is required.
- The sensor has been retrofitted in order to control the flow rate, temperature, differential temperature, liquid level, pH value, etc. at some arbitrary point in the system.

MLE permanent-magnet motors

- 1/2 to 2 HP (0.37 to 1.5 kW) (1 x 200-240 V)
- 1 1/2 to 7 1/2 HP (1.1 to 5.5 kW) (3 x 200-240 V)
- 1 to 15 HP (0.75 to 11 kW) (3 x 440-480 V)

These CRE, CRIE and CRNE pumps without a sensor can be set to either of these control modes:

- constant pressure
- constant differential pressure
- constant temperature
- constant differential temperature
- constant flow rate
- constant level
- constant curve
- constant other value.

MLE asynchronous motors

- 20 to 30 HP (15 to 22 kW) (3 x 460-480 V)

These CRE, CRIE and CRNE pumps without a sensor can be set to either of these control modes:

- controlled operation
- uncontrolled operation (factory setting).

In controlled operating mode, the pump adjusts its performance to the desired setpoint. See fig. 20.

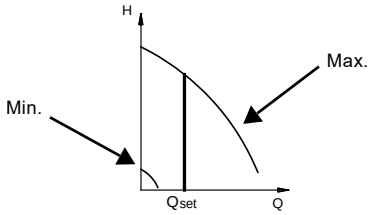

Fig. 20 Constant-flow mode

In uncontrolled operating mode, the pump operates according to a preset pump characteristic curve. See fig. 19.

4. Advanced use of MLE motors

Grundfos MLE motors have many features for the advanced user.

Grundfos three-phase MLE motors have features such as bearing monitoring, standstill heating, stop function, signal relays, analog sensors and limit exceeded. These features give a unique opportunity to customize the E-pumps.

PC Tool E-products gives access to most of the settings available in the products, as well as the possibility of logging and viewing data.

All of these features are described below.

Bearing monitoring

Bearing monitoring is a built-in function indicating the time to relubricate or replace the bearings of the MLE motor. The relubrication feature is only available for three-phase pumps of 15-30 HP (11-22 kW).

Purpose and benefits

The purpose of this function is to give an indication to the user when it is time to relubricate or replace the motor bearings. This is important information for maintenance planning.

Bearing monitoring provides these benefits:

- The bearing can be relubricated at the right time according to the manufacturer's recommendations.
- Maximum life of the motor bearings is obtained.
- Maintenance intervals are based on the operating conditions of the bearings.
- No worn-down or damaged bearings, and consequently no costly down-time, due to overseen maintenance.

Description

When the bearing monitoring function determines that it is time to relubricate the bearings, the user will receive a warning via PC Tool E-products, a bus or a relay.

When the bearings have been relubricated, a certain number of times, the warning function will inform the user to replace the bearings.

The number of relubrications before bearing replacement is set by Grundfos.

Technical description

The bearing monitoring function is available on two levels for calculating the relubrication interval, basic and advanced:

Bearing monitoring function	
	Basic level
	Calculation of relubrication intervals based on motor revolutions The basic level is a standard feature of the 15-30 HP (11-22 kW) basic controller and no special functional module is required.
	Advanced level [only 15-30 HP (11-22 kW)]
	Calculation of relubrication intervals based on motor revolutions and bearing temperature **Note:** The advanced-level function requires the following: • The extended functional module must be fitted in the MLE motor. • Temperature sensors must be fitted at the drive end and at the non-drive end of the motor.

Standstill heating

Standstill heating is a feature ensuring that even during standstill periods the motor windings have a certain minimum temperature.

Purpose and benefits

The purpose of this function is to make the MLE motor more suitable for outdoor installation. During standstill periods, there is a need to keep the motor temperature higher than the ambient temperature to avoid condensation in and on the motor.

Traditionally, this issue has been solved by using an anti-condensation heater on the stator coil heads. Now Grundfos provides this feature by means of a special function within the MLE motor and terminal box.

The MLE motor has standstill heating included. An external heater on the stator coil is not necessary.

Applications

This function is especially suitable in outdoor applications and at installation sites with fluctuating temperatures.

Description

The working principle is that AC voltage is applied to the motor windings. The applied AC voltage will ensure that sufficient heat is generated to avoid condensation in the motor. The terminal box is kept warm and dry by the heat generated via the power supply. However, it is a condition that the terminal box is not exposed to open air. It must be provided with a suitable cover to protect it from rain.

Outdoor installation

According to UL 778 and C22.2 No 108-14, pumps that are intended for outdoor use must be marked enclosure type 3, and the product must be tested at a rated surface temperature down to -31 °F (-35 °C). The MLE enclosure is approved for type 3 or 4 and a rated surface temperature down to 32 °F (0 °C), and thus only for indoor use in UL 778 and C22.2 No 108-14 pump applications. See the installation and operating instructions for additional details.

Stop function

The stop function ensures that the pump is stopped at low or no flow. The function is also called low-flow stop function.

Purpose and benefits

The purpose of the stop function is to stop the pump when low flow is detected.

The stop function provides these benefits:

- The energy consumption is optimized and the system efficiency is improved.
- Unnecessary heating of the pumped liquid which damages pumps is avoided.
- Wear of the shaft seals is reduced.
- Noise from operation is reduced.

Applications

The stop function is used in systems with periodically low or no consumption thus preventing the pump from running against a closed valve.

Operating conditions for the stop function

A pressure sensor, a check valve, and a diaphragm tank are required for the stop function to operate properly.

Note: The check valve must always be installed before the pressure sensor. See fig. 21 and fig. 22.

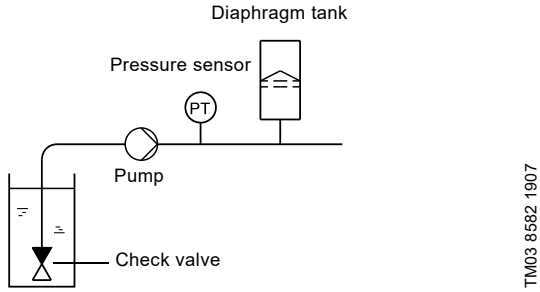

Fig. 21 Position of the check valve and pressure sensor in system with suction lift operation

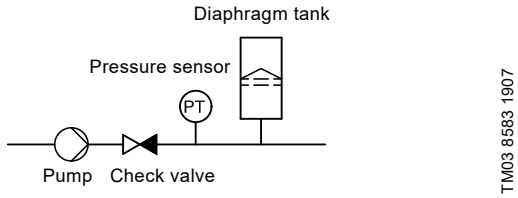

Fig. 22 Position of the check valve and pressure sensor in system with positive inlet pressure

When low flow is detected, the pump is in start/stop operation. If there is flow, the pump will continue operating according to the setpoint. See fig. 23.

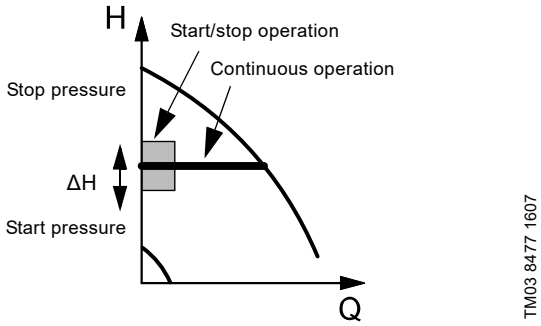

Fig. 23 Constant pressure with stop function. Difference between start and stop pressures (ΔH)

Diaphragm tank

The stop function requires a diaphragm tank of a certain minimum size. The tank must be installed near the pump outlet, and the precharge air pressure must be 0.7 x setpoint.

Recommended diaphragm tank size:

Rated flow rate of pump [gpm (m^3h)]	CRE pump	Typical diaphragm tank size [gal (liter)]
0-26 (0 - 5.9)	1s, 1, 3	2 (7.6)
27-105 (6.1 - 23.8)	5, 10, 15	4.4 (16.7)
106-176 (24.2 - 40)	20, 32	14 (53.0)
177-308 (40.2 - 70.0)	45	34 (128.7)
309-500 (70.2 - 113)	64, 95	62 (234.7)
501-821 (114-186)	125, 155	86 (325.5)

If a diaphragm tank of the above size is installed in the system, additional adjustment is unnecessary. If the tank installed is too small, the pump will start and stop often. The tank size will influence at which flow rate the system will go into start/stop operation.

Description

The low-flow stop function can operate in two different ways:

- by means of an integrated low-flow detection function
- by means of an external flow switch connected to the digital input.

Low-flow detection function

- The low-flow detection function will check the flow rate regularly by reducing the speed for a short time. A small change in pressure or no change in pressure means that there is low flow.

Low-flow detection with flow switch

- When a flow switch detects low flow, the digital input will be activated.

Contact Grundfos for further information.

Dry-running protection

This function protects the pump against dry running. When lack of inlet pressure or water shortage is detected, the pump will be stopped before being damaged.

Lack of inlet pressure or water shortage can be detected with a switch connected to a digital input configured to dry-running protection.

The use of a digital input requires an accessory, such as:

- a Grundfos Liqtec® dry-running switch (for more information on LiqTec, see *Counterflanges for CRE* on page 96)
- a pressure switch installed on the inlet side of the pump
- a float switch installed on the inlet side of the pump.

The pump cannot restart as long as the digital input is activated.

Temperature sensors 1 and 2

One or two Pt100 temperatures sensors may be connected to the input terminals 17, 18, 19, and 20.

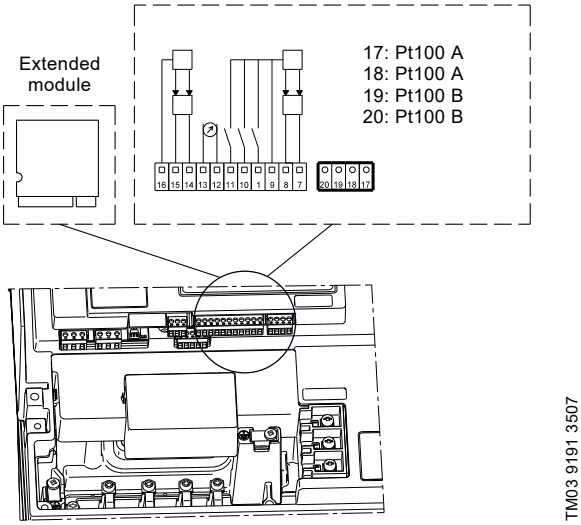

Fig. 24 Temperature sensor connections in the extended functional module

Purpose and benefits

The temperature sensor inputs 1 and 2 provide these benefits:

- The temperature sensor inputs can be used as input to the limit-exceeded functions 1 and 2.
- In combination with the bearing monitoring function, the temperature sensors provide optimum monitoring of the motor bearings.
- A bearing warning or a bearing alarm can be indicated as the motor bearing temperature is measured.
- Status readings of the measured temperatures are available via Grundfos GO Remote, PC Tool E-products and a bus.
- The function has a built-in signal fault detection if the temperature sensors fail or a conductor is broken.

Applications

The temperature inputs can be used in all applications where temperatures in the system or in the motor need to be monitored.

Note that the temperature sensor inputs are available on all MLE motors.

Description

The temperature sensor inputs enable several functions.

- The temperature sensor inputs 1 and 2 can be used as input to the limit-exceeded functions 1 and 2. If a limit is exceeded, this will be indicated. The indication will be in the form of outputs (relay) or alarms/warnings set or defined in the limit-exceeded functions 1 and 2.
- The temperature sensor inputs 1 and 2 can be set to measure bearing temperature. The measured values of temperature sensor 1 and 2 are used in the calculation of relubrication intervals. Additionally, the measured value can activate the indication of a bearing warning or a bearing alarm. In case of high bearing temperature, a warning or an alarm can be logged and force the pump to stop.

Signal relays

Signal relays are used to give an output indication of the current operational status of the MLE. The signal relay is a potential free contact (also called a dry contact). The output signals are typically transmitted to external control systems.

Purpose and benefits

The signal relays offer these features:

- The signal relays can be remotely (via bus) or internally controlled.
- The signal relays can be set to indicate several types of operational status.
- A relay delay can be defined to avoid activating the relay in case of periodic failures.

Applications

Signal relays can be used in all applications involving a need to read out the operational status to e.g. a control room or to a superior control system.

Description

The signal relays can be set with these three parameters:

- relay control
- relay setup
- relay delay.

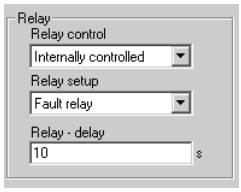

Fig. 25 Signal relay parameters for 1/2 to 10 HP (0.37 to 7.5 KW) pumps

Fig. 26 Signal relay parameters for 15 to 30 HP (11 to 22 KW) pumps

Relay control

The relay time is 0 seconds and the signal relay is internally controlled.

The advanced relay control can only be set via PC Tool E-products.

Relay control has these two setting options:

- Internally controlled
  The relay is internally controlled by the variable frequency drive software according to the setup of the relay [Ready, Fault, Operation].
- Remotely controlled
  The relay is controlled via commands from the GENIbus.

Analog sensor inputs 1 and 2

The analog sensor inputs 1 and 2 are standardized inputs for measuring all types of analog parameters.

Sensor input 1 is the only sensor input set for closed-loop operation. The input will be used as the sensor feedback input.

Sensor input 2 is referred to as the secondary sensor.

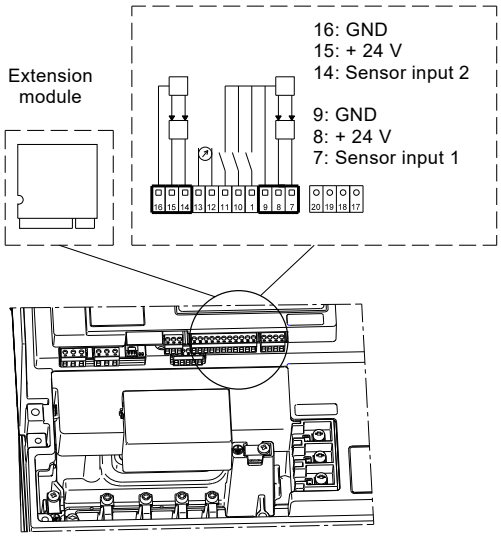

Fig. 27 Sensor inputs 1 and 2 connections

Purpose and benefits

The analog sensor inputs 1 and 2 provide these benefits:

- Sensor input 1 can be feedback input for the built-in PI controller.
- It is possible to monitor secondary parameters in the process, such as flow rate or liquid temperature.
- The secondary sensor can be set as a redundant sensor.
- The sensors can give input to the limit-exceeded functions 1 and 2.
- Status readings of the inputs are available via Grundfos GO Remote and PC Tool E-products.

Applications

Analog sensor inputs 1 and 2 can be used in applications with a need for monitoring essential parameters.

Description

The analog sensors 1 and 2 enable several functions.

- When the secondary sensor is set as an input to the limit-exceeded functions 1 and 2, defined outputs or warnings or alarms can be given when system parameters are outside defined system limits.
- Connecting a flow sensor. When sensor input 2 is set with a flow sensor, the measured value can be used as an input to the proportional-pressure function. The flow rate displayed in Grundfos GO Remote will be the measured flow rate instead of the estimated flow rate. The flow rate measurement can also be used in the low-flow stop function to detect low flow instead of estimating the flow rate by lowering the speed of the pump.
- Sensor reading via Grundfos GO Remote and PC Tool E-products. When sensors are set, the user can get a status reading via Grundfos GO Remote and PC Tool E-products.

Analog output

Analog output

The analog output (0-10 mA) can be set via PC Tool E-products to one of these indications:

- feedback value
- speed
- frequency
- motor current
- external setpoint input
- limit exceeded.

The analog output is default set to not active.

Feedback value

The output signal is a function of the actual feedback sensor.

Speed

The output signal is a function of the actual pump speed.

Frequency

The output signal is a function of the actual frequency.

Motor current

The output signal is a function of the actual motor current.

External setpoint input

The output signal is a function of the external setpoint input.

Limit exceeded

The output signal indicates whether the limit is exceeded:

- Minimum output = limit is not exceeded.
- Maximum output = limit is exceeded.

Limit exceeded 1 and 2

Limit exceeded is a monitoring function monitoring one or two values or inputs. The function enables different inputs to activate various outputs and alarms/warnings when the signal input has exceeded pre-determined limits.

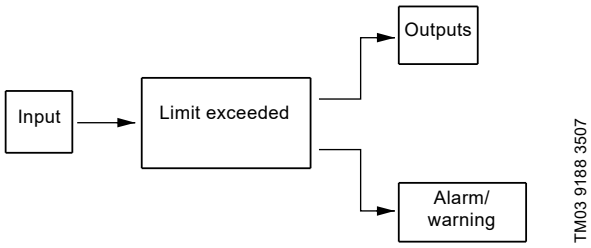

Fig. 28 Example of a limit-exceeded sequence

Purpose and benefits

The purpose of this function is to monitor parameters which are central for the application. This will enable the controller to react to possible, abnormal operating conditions. This makes the E-pump a more important and integrated part of a system, and it can thus replace other existing monitoring units.

The liquid temperature can be monitored, and thus the E-pump can ensure that the system temperature does not exceed a maximum permissible level.

The minimum inlet pressure can be monitored, and thus the E-pump can prevent damage caused by a cavitation or dry run.

Applications

The limit-exceeded function is typically used for monitoring secondary parameters in the systems.

Description

The figures below show two examples of setpoint monitoring by means of the limit-exceeded function.

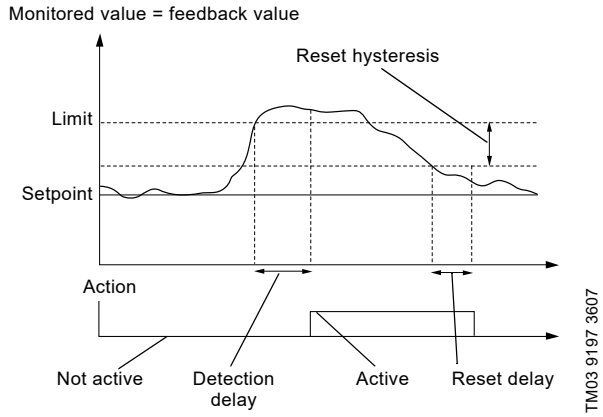

Fig. 29 Limit-exceeded sequence with the limit type "max. limit", for example monitoring of bearing temperature

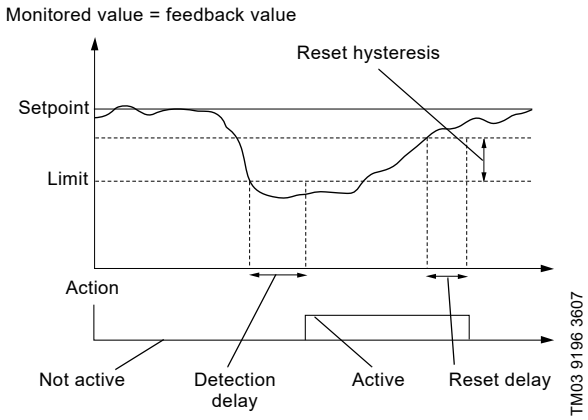

Fig. 30 Limit-exceeded sequence with the limit type "min. limit"

When the limit is exceeded, the signal input crosses the limit as an increasing or decreasing value, and the function can be set to cover both situations.

Pump operating at power limit

When a pump is operating at the power limit, the MLE motor will deliver an output corresponding to the maximum load stated on the nameplate. The maximum load will never be exceeded. See fig. 31.

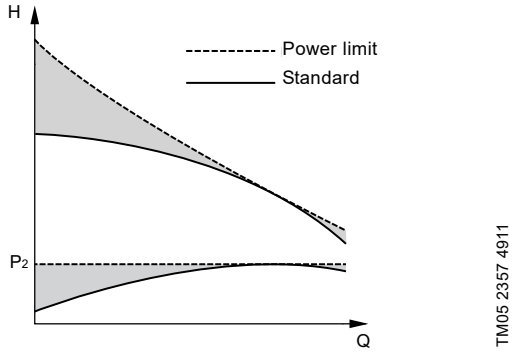

Fig. 31 Curves of a standard E-pump and a pump operating at power limit

Purpose and benefits

When using a standard pump at a low flow rate, the power consumption will drop and the motor will have excess power available.

By setting the CRE pump to operate at a higher speed, the excess power can be used to provide a higher pressure. The power limit function will make sure that the motor load never exceeds its maximum by decreasing the speed until the motor is at its power limit.

In cases where an undersized motor is used with standard speed, the power limit function will still reduce the speed and protect the motor against overload at a high flow rate. The solution offers the following benefits:

- reduced motor size
- reduced pump size.

Figure 32 shows that a pump operating at low flow rates and relatively high pressures (1) can be fitted with an undersize motor with a rated power that matches this operating range. At higher flow rates and relatively lower pressures (2), the motor will reduce its speed when the power limit is exceeded and follow a steeper curve corresponding to the power available.

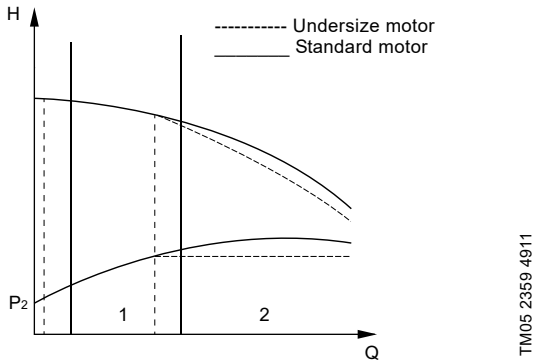

Fig. 32 Standard performance curve compared to a curve for a pump fitted with an undersize MLE motor.

The MLE motor can be set to a higher speed than a standard motor, enabling the pump to deliver more pressure. The pump will operate at this higher speed until the pump reaches the flow rate where the motor is loaded to its full rated power. If the flow rate is increased further, the motor will reduce its speed so as not to exceed its rated power.

Using this function can, in some instances, enable the use of a smaller pump to reach the desired duty point compared to a pump running with standard maximum speed. See fig. 33.

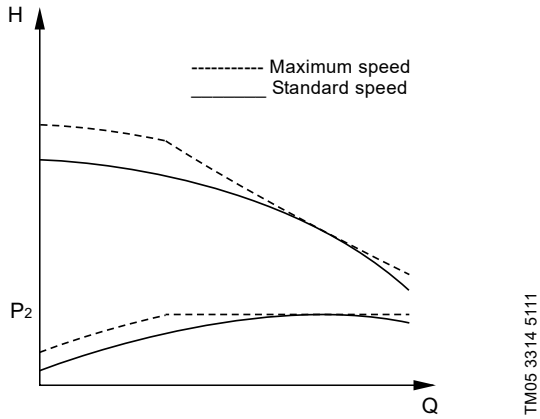

Fig. 33 Standard performance curve (60 Hz) compared to a performance curve for a pump running at maximum speed.

Applications

The power limit function is primarily used in applications where the motor size is dimensioned to be as small as possible to reduce size or cost. It is also used in applications demanding a high maximum speed to achieve a high pressure at a low flow rate. In both cases, the motor is protected by the power limit function at a higher flow rate where a lower speed is needed to prevent the motor from overloading.

Examples of applications:

- Washing and cleaning
- Boiler feed.

Setup

The power limit is always active in CRE pumps to protect the motor against overload. Pumps with undersize motor and pumps with higher maximum speed are available as factory-configured products.

Note that running the pump at over-synchronous speed will affect the NPSH value, thus requiring a sufficient inlet pressure to avoid cavitation.

The sound pressure level emitted from the pump and motor may increase at higher speeds.

Furthermore, the differential pressure over the chambers must be taken into consideration.

Stabilizing unstable pump curves

When the pump curve has a shape where it intersects the system curve in two points (A and B) with identical pressure but at different flow rates, the pump curve is defined as unstable. See fig. 34. This is especially problematic in systems with a flat system characteristic as it prevents the pump from being controlled to a flow rate which is lower than the flow rate at point B.

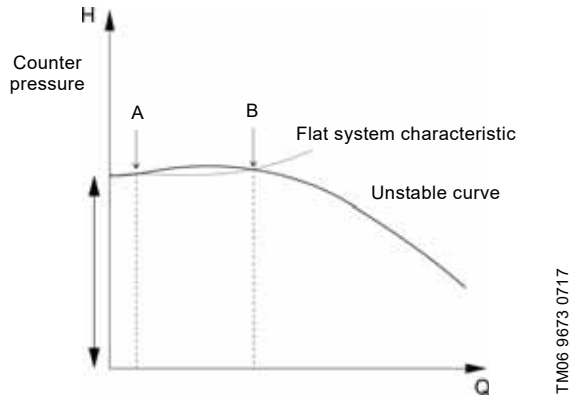

Fig. 34 Unstable pump curve

The E-motor can stabilize an unstable pump curve in the low-flow area by changing to a higher speed. Figure 35 illustrates how the pump curve is straightened out in this area. As the flow rate increases, the E-motor gradually reduces the speed to normal speed and the pump performance will follow the standard pump curve.

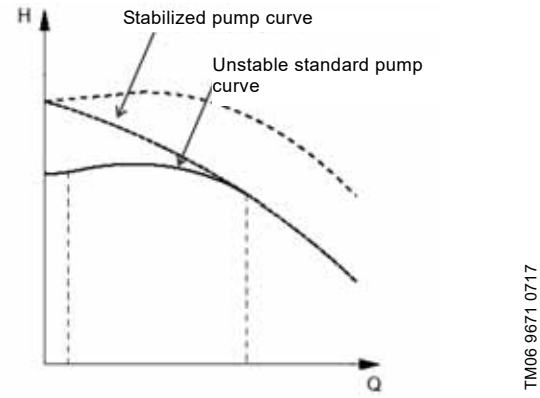

Fig. 35 Pump curve with a stabilized operating range

Purpose and benefits

The purpose of stabilizing an unstable pump is to enable normal control throughout the entire operating range. Thus fully stable operation is achieved, even in the low-flow range. This enables the use of modern high-efficiency pumps in applications where this would otherwise not be possible.

Applications

As mentioned, unstable operation may occur in applications with a high counter pressure and a flat system characteristic.

Examples of applications:

- pumping of water to a water tower
- boiler feed.

Note: The sound pressure level emitted from the pump and motor may increase at higher speeds.

Setup

This function is available in factory-configured products.

5. Application examples of differential pressure in a circulation system

Circulation systems (closed systems) are well-suited for speed-controlled pump solutions.

It is an advantage that circulation systems with variable system characteristic are fitted with a differential-pressure-controlled circulator pump. See fig. 36.

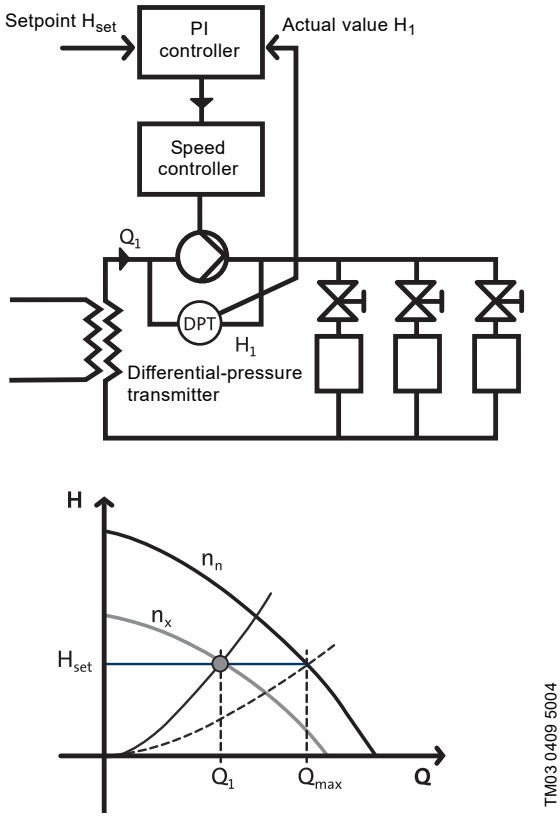

Fig. 36 Constant differential-pressure control

Figure 36 shows a heating system consisting of a heat exchanger where the circulated water is heated and delivered to three radiators by a speed-controlled pump. A control valve is connected in series at each radiator to control the flow rate according to the heat requirement.

The pump is controlled according to a constant differential pressure measured across the pump. This means that the pump system offers constant differential pressure in the Q range of 0 to $Q_{max.}$, represented by the horizontal line in fig. 36.

Constant differential pressure

The differential pressure of the pump is kept constant, independently of the flow rate. See fig. 37.

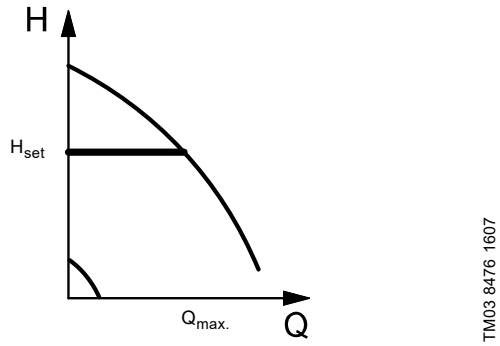

Fig. 37 Constant differential pressure, pump

The pump is controlled according to a constant differential pressure measured across the pump. This means that the pump system offers constant differential pressure in the Q-range of 0 to $Q_{max.}$, represented by the horizontal line in the QH diagram.

Proportional differential pressure

The differential pressure of the pump is reduced at falling flow rate and increased at rising flow rate. See fig. 38.

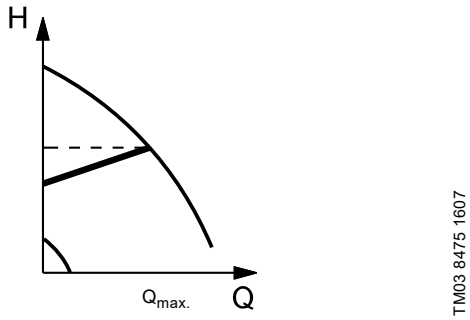

Fig. 38 Proportional differential pressure

The pump is controlled according to a differential pressure measured across the pump. This means that the pump system offers a proportional differential pressure in the Q-range of 0 to $Q_{max.}$, represented by the sloping line in the QH diagram.

Proportional differential pressure, parabolic curve

Available on CRE-DP (differential pressure) only

Setting via PC Tool.

The proportional differential pressure can be selected with one of these flow dependencies:

- linear (setting via PC Tool).
- parabolic (setting via PC Tool).

When the flow dependency is selected as parabolic, the differential pressure of the pump will be reduced with a parabolic curve at falling flow rate and increased at rising flow rate. See fig. 39.

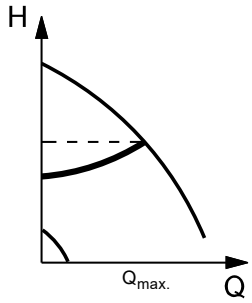

TM04 1695 0908

Fig. 39 Proportional differential pressure, parabolic curve

The pump is controlled according to a differential pressure measured across the pump. This means that the pump system offers a flow-compensated differential pressure in the Q-range of 0 to $Q_{max.}$, represented by the parabolic curve in the QH diagram.

Constant differential pressure setpoint range

The setpoint range is between 12.5 % and 100 % of maximum head.

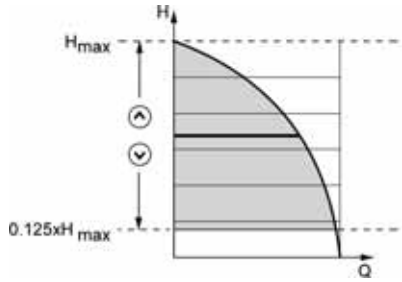

TM06 2408 1014

Fig. 40 Constant differential pressure

Proportional differential pressure setpoint range

The setpoint range is between 25 % and 90 % of maximum head.

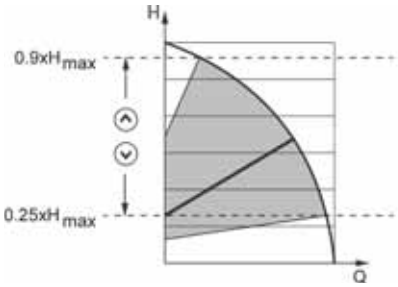

TM06 2479 1014

Fig. 41 Proportional differential pressure

To compensate for this excessive system pressure, the proportional-pressure function automatically adapts the setpoint to the actual flow rate.

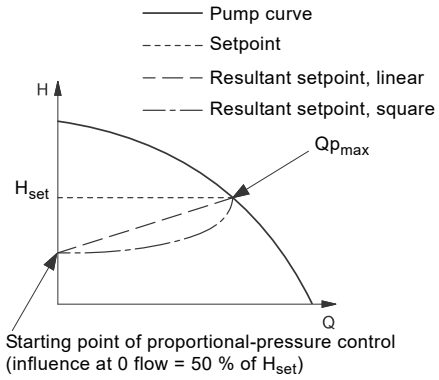

TM03 8524 2212

Fig. 42 Proportional-pressure control

The factory-fitted differential-pressure sensor is a variant. Contact Grundfos for additional details.

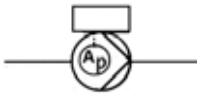

TM06 2478 1014

Fig. 43 Proportional pressure

6. Construction

CRE 1s, 1, 3, 5, 10, 15 and 20

TM05 9425 3813

Sectional drawing

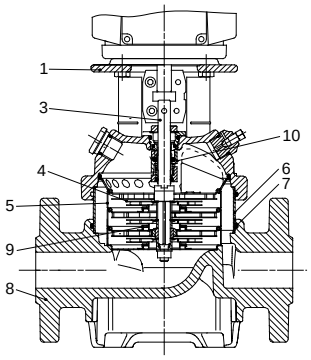

TM02 1194 1403

Materials: CRE

Pos.	Designation	Materials	AISI/ASTM
1	Pump head	Cast iron	A 48-30 B
3	Shaft	Stainless steel	AISI 316[1)] AISI 431[2)]
4	Impeller	Stainless steel	AISI 304
5	Chamber	Stainless steel	AISI 304
6	Outer sleeve	Stainless steel	AISI 304
7	O-ring for outer sleeve	EPDM or FKM	
8	Base	Cast iron	A 48-30 B
9	Neck ring	PTFE	
10	Shaft seal	Cartridge type	
	Bearing rings	Silicon carbide	
	Rubber parts	EPDM or FKM	
	FJG flange	Cast iron	A 48-30 B

1) CRE 1s, 1, 3, 5
2) CRE 10, 15, 20
3) Stainless steel available on request.
4) CF 8M is cast equivalent of AISI 316 stainless steel.
5) CRIE/CRNE 1s, 1, 3, 5
6) CRNE 10, 15, 20
7) CRIE 10, 15, 20

CRIE, CRNE 1s, 1, 3, 5, 10, 15 and 20

TM02 7399 2004

Sectional drawing

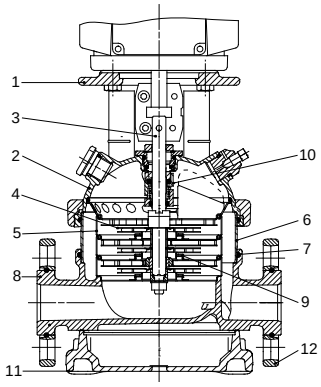

TM03 2156 3805

Materials: CRIE, CRNE

Pos.	Designation	Materials	AISI/ASTM
1	Pump head	Cast iron[3)]	A 48-30 B
2	Pump head cover	Stainless steel	CF 8M[4)]
3	Shaft	Stainless steel	AISI 316[5)] AISI 329[6)] AISI 431[7)]
8	Base	Stainless steel	CF 8M[4)]
9	Neck ring	PTFE	
10	Shaft seal	Cartridge type	
11	Base plate	Cast iron[3)]	A 48-30 B
	Bearing rings	Silicon carbide	
	Rubber parts	EPDM or FKM	
	CRIE		
4	Impeller	Stainless steel	AISI 304
5	Chamber	Stainless steel	AISI 304
6	Outer sleeve	Stainless steel	AISI 304
7	O-ring for outer sleeve	EPDM or FKM	
12	FGJ flange ring	Ductile iron[3)]	A 65-45-12
	Oval flange	Stainless steel	AISI 316
	CRNE		
4	Impeller	Stainless steel	AISI 316
5	Chamber	Stainless steel	AISI 316
6	Outer sleeve	Stainless steel	AISI 316
7	O-ring for outer sleeve	EPDM or FKM	
12	FGJ flange ring	Ductile iron[3)]	A 65-45-12

CRE 32, 45 and 64

TM05 9425 3813

Sectional drawing

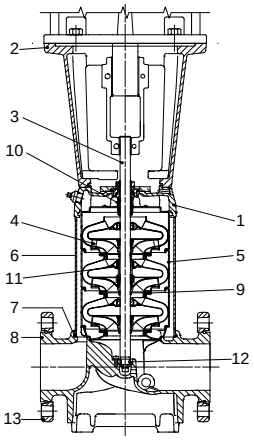

TM03 2157 3805

Materials: CRE

Pos.	Designation	Materials	AISI/ASTM
1	Pump head	Ductile iron	A 65-45-12
2	Motor stool	Cast iron	A 48-30 B
3	Shaft	Stainless steel	AISI 431
4	Impeller	Stainless steel	AISI 304
5	Chamber	Stainless steel	AISI 304
6	Outer sleeve	Stainless steel	AISI 304
7	O-ring for outer sleeve	EPDM or FKM	
8	Base	Ductile iron	A 65-45-12
9	Neck ring	Acoflon 215	
10	Shaft seal	Cartridge type	
11	Bearing ring	Bronze	
12	Bottom bearing ring	Tungsten carbide/ Tungsten carbide	
13	Flange ring	Ductile iron[2)]	A 65-45-12
	Rubber parts	EPDM or FKM	

CRNE, CRIE 32, 45 and 64

TM02 7399 3403

Sectional drawing

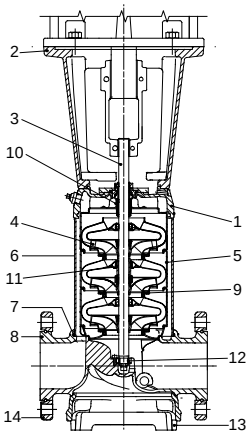

TM03 2158 3805

Materials: CRNE

Pos.	Designation	Materials	AISI/ASTM
1	Pump head	Stainless steel	CF 8M[1)]
2	Motor stool	Cast iron	A 48-30 B
3	Shaft	Stainless steel	SAF 2205
4	Impeller	Stainless steel	AISI 316
5	Chamber	Stainless steel	AISI 316
6	Outer sleeve	Stainless steel	AISI 316
7	O-ring for outer sleeve	EPDM or FKM	
8	Base	Stainless steel	CF 8M[1)]
9	Neck ring	Acoflon 215	
10	Shaft seal	Cartridge type	
11	Bearing ring	Carbon-graphite filled PTFE	
12	Bottom bearing ring	Tungsten carbide/ Tungsten carbide	
13	Base plate	Ductile iron[2)]	A 65-45-12
14	Flange ring	Ductile iron[2)]	A 65-45-12
	Rubber parts	EPDM or FKM	

1) CF 8M is cast equivalent of AISI 316 stainless steel.
2) Stainless steel available on request.

CRE 95, 125 and 155

ANSI flange

TM07 4472 1419

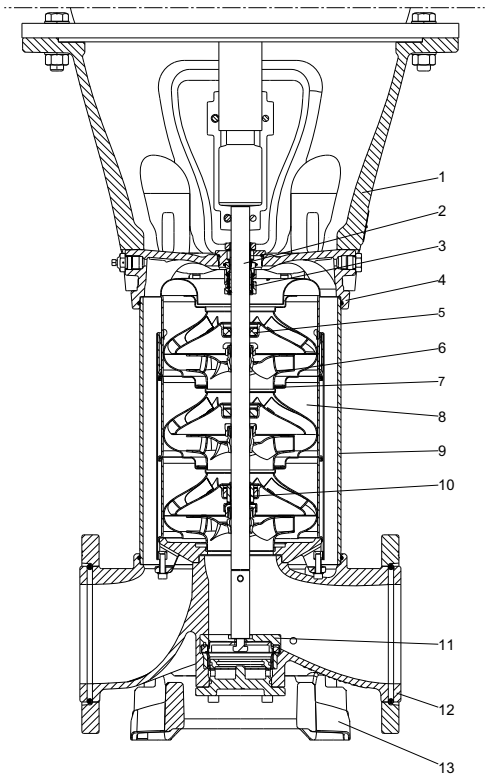

TM06 5161 1917

Materials, CRE

Pos.	Designation	Materials	DIN/EN	≈ AISI/ASTM
1	Motor stool	Ductile cast iron	EN-GJS-500-7	ASTM A536-84 70-50-05
2	Shaft	Stainless steel	EN10088 1.4057[1)] EN10088 1.4462[2)]	EN10088 1.4057 = 431 EN10088 1.4462 = 318 LN
3	Shaft seal (seal faces)	Silicon carbide/Silicon carbide	-	-
4	Pump head	Ductile cast iron	EN-GJS-500-7	ASTM A536-84 70-50-05
5	Support bearing (bush)	Carbon-graphite filled PTFE		
6	Impeller	Stainless steel	EN10088 1.4301	AISI 304
7	Neck ring	PEEK	-	-
8	Chamber	Stainless steel	EN10088 1.4301	AISI 304
9	Sleeve	Stainless steel	EN10088 1.4301[1)] EN10088 1.4404[2)]	AISI 304[1)] AISI 316 L[2)]
10	Bearing ring	Tungsten carbide/Tungsten carbide	-	-
11	Thrust handling device[3)]	Stainless steel	EN10088 1.4401 EN10283 1.4408	AISI 316/CF 8M
		Silicon carbide/Tungsten carbide	-	-
12	Base	Ductile cast iron	EN-GJS-500-7	ASTM A536-84 70-50-05
13	Base plate	Ductile cast iron	EN-GJS-500-7	ASTM A536-84 70-50-05
	Rubber parts	EPDM or FKM	-	-

1) Applies to CRE 95.
2) Applies to CRE 125 and CRE 155.
3) Only fitted on pumps with 100 HP (75 kW) motors or larger.

CRNE 95, 125 and 155

ANSI flange

PJE (Victaulic type)

TM07 4486 1419

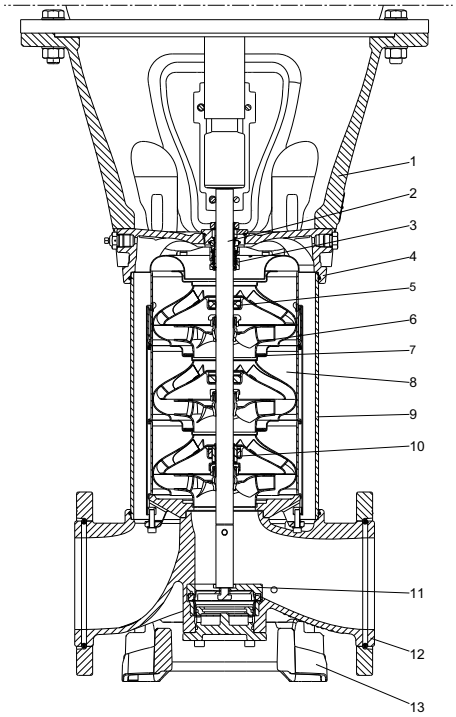

TM06 5161 1917

Materials, CRNE

Pos.	Designation	Materials	DIN/EN	≈ AISI/ASTM
1	Motor stool	Ductile cast iron	EN-GJS-500-7	ASTM A536-84 70-50-05
2	Shaft	Stainless steel	EN10088 1.4462	318 LN
3	Shaft seal (seal faces)	Silicon carbide/Silicon carbide	-	-
4	Pump head	Stainless steel	EN10283 1.4408	CF 8M
5	Support bearing (bush)	Carbon-graphite filled PTFE	-	-
6	Impeller	Stainless steel	EN10088 1.4401	AISI 316
7	Neck ring	PEEK	-	-
8	Chamber	Stainless steel	EN10088 1.4401	AISI 316
9	Sleeve	Stainless steel	EN10088 1.4404	AISI 316 L
10	Bearing ring	Tungsten carbide/Tungsten carbide	-	-
11	Thrust handling device[1)]	Stainless steel	EN10088 1.4401 EN10283 1.4408	AISI 316/CF 8M
		Silicon carbide/Tungsten carbide	-	-
12	Base	Stainless steel	EN10283 1.4408	CF 8M
13	Base plate	Ductile cast iron	EN-GJS-500-7	ASTM A536-84 70-50-05
	Rubber parts	EPDM or FKM	-	-

[1)] Only fitted on pumps with 100 HP (75 kW) motors or larger.

7. Type keys and codes

Type key

CRE, CRIE, CRNE

Example	CR	E	32	-4	-2	-A	-G	-A	-E	-HQQE	O	C	B
Type range: CRE, CRIE, CRNE													
Pump with integrated frequency converter													
Rated flow rate [gpm (m^3/h)]													
Number of impellers													
Number of reduced-diameter impellers CRE, CRIE, CRNE, 32, 45, 64, 95, 125, and 155)													
Code for pump version													
Code for pipe connection													
Code for materials													
Code for rubber parts													
Code for shaft seal													
Code for motors [HP (kW)]													
Code for phase and voltage (V)													
Code for speed variant (rpm)													

Key to codes

Example	A	-G	-A	-E	-H	QQ	E
Pump version							
A Basic version[1)]							
B Oversize motor							
E Certificate/approval							
F CR pump for high temperatures (air-cooled top assembly)							
H Horizontal version							
HS High-pressure pump with high speed MLE motor							
I Different pressure rating							
J Pump with different maximum speed							
K Pump with low NPSH							
M Magnetic drive							
N Fitted with sensor							
P Undersize motor							
R Horizontal version with bearing bracket							
SF High pressure pump							
T Oversize motor (two flange sizes bigger)							
U NEMA version[1)]							
X Special version							

1) In August 2003, the NEMA version pump code was discontinued for all material numbers created by Grundfos manufacturing companies in North America. The NEMA version pump code will still remain in effect for existing material numbers. NEMA version pumps built in North America after this change will have either an A or U as the pump version code depending on the date the material number was created.

Example	A	-G	-A	-E	-H	QQ	E

Pipe connection

A	Oval flange Rp thread
B	Oval flange NPT thread
CA	FlexiClamp (CRIE, CRNE 1, 3, 5, 10, 15, 20)
CX	Triclamp (CRIE, CRNE 1, 3, 5, 10, 15, 20)
F	DIN flange
G	ANSI flange
J	JIS flange
N	Different port diameters
P	PJE coupling
X	Special version

Materials

A	Basic version
D	Carbon-graphite filled PTFE (bearings)
G	Wetted parts AISI 316
GI	All parts of stainless steel, wetted parts of AISI 316
I	Wetted parts of AISI 304
II	All parts of stainless steel, wetted parts of AISI 304
K	Bronze (bearings)
S	SiC bearings + PTFE neck rings
X	Special version

Code for rubber parts

E	EPDM
F	FXM
K	FFKM
V	FKM

Shaft seal

A	O-ring seal with fixed driver
B	Rubber bellows seal
E	Cartridge seal with O-ring
H	Balanced cartridge seal with O-ring
K	Metal bellows cartridge seal
O	Double seal, back-to-back
P	Double seal, tandem
X	Special version

B	Carbon, synthetic resin-impregnated
H	Cemented tungsten carbide, embedded (hybrid)
Q	Silicon carbide
U	Cemented tungsten carbide
X	Other ceramics

E	EPDM
F	FXM
K	FFKM
V	FKM

Example	O	C	B

Code for motors [HP (kW)]

C	0.33 (0.25)
D	0.5 (0.37)
E	0.75 (0.55)
F	1 (0.75)
G	1.5 (1.1)
H	2 (1.5)
I	3 (2.2)
K	5 (4)
L	7.5 (5.5)
M	10 (7.5)
N	15 (11)
O	20 (15)
P	25 (18.5)
Q	30 (22)

Code for phase and voltage (V)

A	1 x 200-240 V
B	3 x 200-240 V
C	3 x 440-480 V
D	3 x 380-500 V
X	Not defined

Code for speed variant (rpm)

A	1450-2000
B	2900-4000
C	4000-5900
2	2-pole
4	4-pole

8. Operating and inlet pressure

Maximum operating pressure and temperature range

	Oval flange		ANSI, Clamp, PJE	
	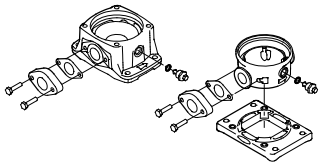 TM02 1379 1101		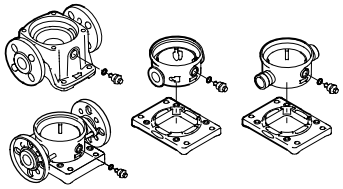 TM02 8835 0904	
	Max. permissible operating pressure [psi]	**Liquid temperature range [°F]**	**Max. permissible operating pressure [psi]**	**Liquid temperature range [°F]**
CRE, CRIE, CRNE 1	232	-4 to +248	362	-4 to +248
CRE, CRIE, CRNE 3	232	-4 to +248	362	-4 to +248
CRE, CRIE, CRNE 5	232	-4 to +248	362	-4 to +248
CRE 10-1 → CRE 10-6	145	-4 to +248	-	-
CRIE, CRNE 10-1 → CRIE, CRNE 10-10	232	-4 to +248	-	-
CRE, CRIE 10-1 → CRE, CRIE 10-10	-	-	232	-4 to +248
CRE, CRIE 10-12 → CRE, CRIE 10-17	-	-	362	-4 to +248
CRNE 10	-	-	362	-4 to +248
CRE 15-1 → CRE 15-5	145	-4 to +248	-	-
CRIE, CRNE 15-1 → CRIE, CRNE 15-8	232	-4 to +248	-	-
CRE, CRIE 15-1 → CRE, CRIE 15-8	-	-	232	-4 to +248
CRE, CRIE 15-9 → CRE, CRIE 15-12	-	-	362	-4 to +248
CRNE 15	-	-	362	-4 to +248
CRE 20-1 → CRE 20-5	145	-4 to +248	-	-
CRIE, CRNE 20-1 → CRIE, CRNE 20-7	232	-4 to +248	-	-
CRE, CRIE 20-1 → CRE, CRIE 20-7	-	-	232	-4 to +248
CRE, CRIE 20-8 → CRE, CRIE 20-10	-	-	362	-4 to +248
CRNE 20	-	-	362	-4 to +248
CRE, CRNE 32-1-1 → CRE, CRNE 32-5	-	-	232	-22 to +248
CR, CRN 32-6-2 → CR, CRN 32-11-2	-	-	435	-22 to +248
CRE, CRNE 45-1-1 → CRE, CRNE 45-4-2	-	-	232	-22 to +248
CRE, CRNE 45-4-1 → CR, CRN 45-8-1	-	-	435	-22 to +248
CRE, CRNE 64-1-1 → CRE, CRNE 64-3	-	-	232	-22 to +248
CRE, CRNE 64-4-2 → CRE, CRNE 64-5-2	-	-	435	-22 to +248

Maximum operating pressure and liquid temperature

Pump type			ANSI, PJE (Victaulic type)	
			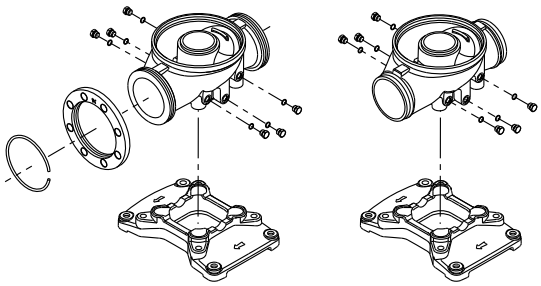 TM06 9402 2417	
		Pressure class	Maximum permissible operating pressure in standard configuration [psi (bar)]	Liquid temperature [°F (°C)]
CRE 95-1-1	→	CRE 95-2-1	363 (25)	-22 to 248 (-30 to 120)
CRE 125-1-1	→	CRE 125-2-2		
CRE 155-1-1				
CRNE 95-1-1	→	CRNE 95-2-1	Note: CRN models may be configured for up to 580 psi (40 bar) (depending on model). Please contact Grundfos.	-40 to 248 (-40 to 120)*
CRNE 125-1-1	→	CRNE 125-2-2		
CRNE 155-1-1				

150

* For operating pressures above 435 psi (30 bar), the liquid temperature limits are -40 to 176 °F (-40 to 80 °C).

Operating range of the shaft seal

The operating range of the shaft seal depends on operating pressure, pump type, type of shaft seal and liquid temperature. The following curves apply to clean water and water with anti-freeze liquids. For selecting the right shaft seal. See *Pumped liquids* on page 94.

CRE 1s - CRE 20

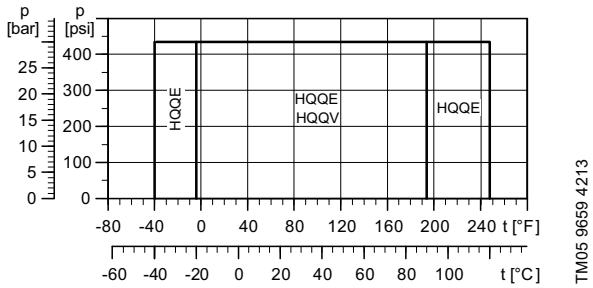

Fig. 44 Operating range of standard shaft seals for CRE 1s - CRE 20

CRE 32 - CRE 64 [3 to 30 HP (2.2 to 22 kW)]

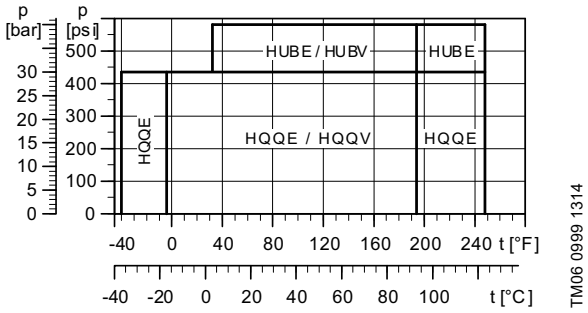

Fig. 45 Operating range of standard shaft seals for CRE 32 - CRE 64 [3 to 30 HP (2.2 to 22 kW)]

Shaft seal	Description	Max. temp. range [°F (°C)]
HQQE	O-ring (cartridge) (balanced seal), SiC/SiC, EPDM	-40 °F to +248 °F (-40 °C to +120 °C)
HQQV	O-ring (cartridge) (balanced seal), SiC/SiC, FKM	-4 °F to +194 °F (-20 °C to +90 °C)
HUBE	O-ring (cartridge) (balanced seal), TC/carbon, EPDM	+32 °F to +248 °F (0 °C to +120 °C)
HUBV	O-ring (cartridge) (balanced seal), TC/carbon, FKM	+32 °F to +194 °F (0 °C to +90 °C)

Note that TC stands for tungsten carbide

See section *Lists of variants on request* on page 112, in case of extreme temperatures:

- low temperatures down to -40 °F (-40 °C) or
- high temperatures up to +356 °F (+180 °C).

CRE, CRNE 95-155

Shaft seals for ∅22 mm shafts [15 to 30 HP (11 to 22 kW)]

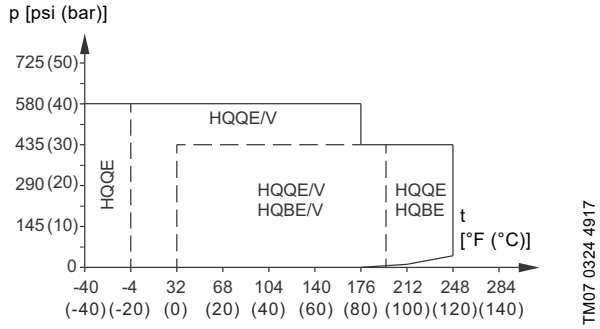

Fig. 46 Operating range of standard shaft seals for CRE, CRNE 95-155

Standard shaft seal	Motor size [HP (kW)]	Description	Liquid temperature [°F (°C)]
HQQE	15-30 (11-22)	O-ring (cartridge) (balanced seal), Silicon carbide/Silicon carbide, EPDM	-40 - +248 (-40 - +120)
HQQV		O-ring (cartridge) (balanced seal), Silicon carbide/Silicon carbide, FKM	-4 - +194 (-20 - +90)
HQBE		O-ring (cartridge) (balanced seal), Silicon carbide/ carbon, EPDM	32 - +248 (0 - +120)
HQBV		O-ring (cartridge) (balanced seal), Silicon carbide/ carbon, FKM	32 - +194 (0 - +90)

Maximum inlet pressure

The following table shows the maximum permissible inlet pressure. However, the actual inlet pressure plus the pressure against a closed valve must always be lower than the maximum permissible operating pressure.

If the maximum permissible operating pressure is exceeded, the conical bearing in the motor may be damaged and the life of the shaft seal reduced.

Pump type	Maximum inlet pressure [psi (bar)]
CRE, CRIE, CRNE 1	
1-2 → 1-25 1-27	145 (10) 218 (15)
CRE, CRIE, CRNE 3	
3-2 → 3-17 3-19 → 3-25	145 (10) 218 (15)
CRE, CRIE, CRNE 5	
5-2 → 5-9 5-10 → 5-24	145 (10) 218 (15)
CRE, CRIE, CRNE 10	
10-1 → 10-5 10-6 → 10-17	116 (8) 145 (10)
CRE, CRIE, CRNE 15	
15-1 → 15-2 15-3 → 15-12	116 (8) 145 (10)
CRE, CRIE, CRNE 20	
20-1 20-2 → 20-10	116 (8) 145 (10)
CRE, CRNE 32	
32-1-1 → 32-2 32-3-2 → 32-6 32-7	58 (4) 145 (10) 218 (15)
CRE, CRNE 45	
45-1-1 → 45-1 45-2-2 → 45-3 45-4-2 →	58 (4) 145 (10) 218 (15)
CRE, CRNE 64	
64-1-1 64-1 → 64-2-1 64-2 → 64-3-2	58 (4) 145 (10) 218 (15)
CRE, CRNE 95	
95-1-1 → 95-2-2 95-2-1	145 (10) 218 (15)
CRE, CRNE 125	
125-1-1 → 125-1 125-2-2	145 (10) 218 (15)
CRE, CRNE 155	
155-1-1	145 (10)

Examples of operating and inlet pressures

The values for operating and inlet pressures shown in the table must not be considered individually but must always be compared. See the following examples.

Example 1:

Pump (see page 52):	CRE 3-10 A-A-A
Maximum operating pressure:	232 psi (16 bar)
Maximum inlet pressure:	145 psi (10 bar)
Outlet pressure against a closed valve:	139.2 psi (9.5 bar)

This pump must not start at an inlet pressure of 145 psi, but at an inlet pressure of 232.0 - 139.2 = 92.8 psi (6.39 bar).

Example 2:

Pump (see page 60):	CRE 10-2 A-GJ-A
Maximum operating pressure:	232 psi (16 bar)
Maximum inlet pressure:	116 psi (8 bar)
Outlet pressure against a closed valve:	42 psi (3 bar), (97 ft (30 m))

This pump may start at an inlet pressure of 116 psi (8 bar), as the outlet pressure is only 42 psi, which results in an operating pressure of 116 + 42 = 158 psi (11 bar). On the contrary, the maximum operating pressure of this pump is limited to 158 psi (11 bar), as a higher operating pressure will require an inlet pressure of more than 116 psi (8 bar).

In case the inlet or operating pressure exceeds the pressure permitted, see *Lists of variants on request* on page 112.

9. Selection and sizing

Selection of pump

Base the selection of pump on these parameters:

- Duty point of the pump. See page 43.
- Sizing data such as pressure loss as a result of height differences, friction loss in the pipes, pump efficiency. See page 43.
- Pump materials. See page 45.
- Pump connections. See page 45.
- Shaft seal. See page 45.

Duty point of the pump

From a duty point, you can select a pump on the basis of the curve charts in the section *Performance curves and technical data* on page 48. Ideally, the duty point should match the best efficiency on the pump curve. See example in fig. 48.

Sizing data

When sizing a pump, take these parameters into account:

- Required flow and pressure at the draw-off point.
- Pressure loss as a result of height differences (H_{geo}).
- Friction loss in the pipes (H_f)
  It may be necessary to account for pressure loss in connection with long pipes, bends, valves, or similar.
- Best efficiency at the estimated duty point.
- NPSH value.
  For calculation of the NPSH value, see *Minimum inlet pressure - NPSHA* on page 46.

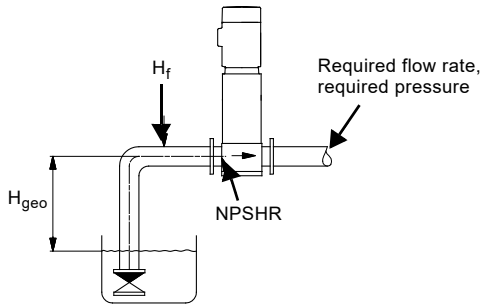

TM02 6711 1403

Fig. 47 Sizing data

Pump efficiency

Before determining the best efficiency point, identify the operating pattern of the pump. If the pump is expected to always operate at the same duty point, then select a pump which is operating at a duty point corresponding to the best efficiency of the pump.

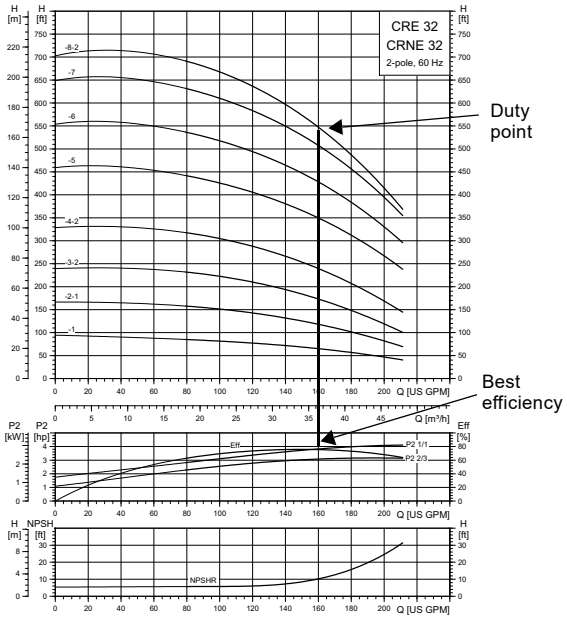

TM05 9418 4619

Fig. 48 Example of a CRE pump's duty point

As the pump is sized on the basis of the highest possible flow rate, it is important to always have the duty point to the right of the best efficiency point on the efficiency curve (Eff). This must be considered in order to keep efficiency high when the flow rate drops.

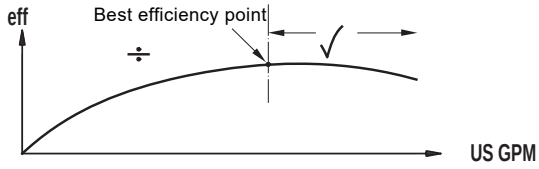

TM02 8579 0504

Fig. 49 Best efficiency

Normally, E-pumps are used in applications characterized by a variable flow rate. Consequently, it is not possible to select a pump that is constantly operating at its best efficiency.

In order to achieve optimum operating economy, select the pump on the basis of the following criteria:

- The maximum required duty point must be as close as possible to the QH curve of the pump.
- The required duty point must be positioned so that P2 is close to the maximum point of the 100 % curve.

Between the minimum and maximum performance curve E-pumps have an infinite number of performance curves each representing a specific speed. Therefore it may not be possible to select a duty point close to the 100 % curve.

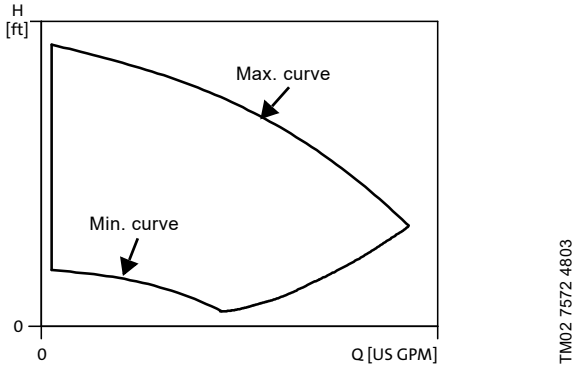

Fig. 50 Minimum and maximum performance curves

In situations where it is not possible to select a duty point close to the 100 % curve, the affinity equations to the right can be used. The head (H), the flow rate (Q) and the input power (P) are all the appropriate variables for determining the motor speed (n). See fig. 51.

Note:

The approximated formulas apply on the condition that the system characteristic remains unchanged for nn and nx and that it is based on the formula H = k x Q2, where k is a constant.

The power equation implies that the pump efficiency is unchanged at the two speeds. In practice this is **not** quite correct.

To obtain a precise calculation of the power savings resulting from a reduction of pump speed, take into account the efficiencies of the frequency converter and the motor.

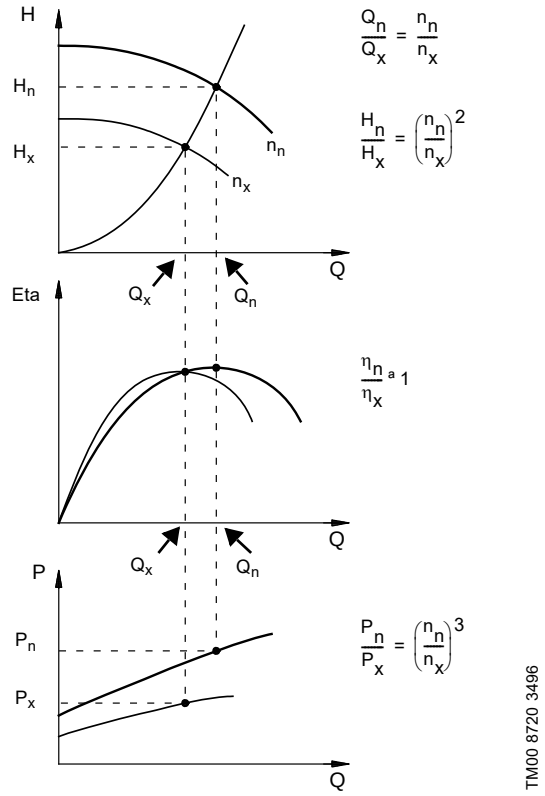

Fig. 51 Affinity equations

Legend

H_n	Rated head in feet
H_x	Current head in feet
Q_n	Rated flow rate in US gpm
Q_x	Current flow rate in US gpm
n_n	Rated motor speed in min^{-1} (n_n = 3500 min^{-1})
n_x	Current motor speed in min^{-1}
η_n	Rated efficiency in %
η_x	Current efficiency in %

Grundfos Product Center

We recommend that you size your pump in Grundfos Product Center, which is a selection program offered by Grundfos. For further information, see *Grundfos Product Center* on page 115.

Grundfos Product Center features a user-friendly and easy-to-use virtual guide which leads you through the selection of the pump for the application in question.

Pump material

Select the material variant on the basis of the liquid to be pumped. The product range covers these basic types:

- CRE, CRIE
  Use CRE, CRIE pumps for clean, non-aggressive liquids such as potable water and oils.
- CRNE
  Use CRNE pumps for industrial liquids and acids. See *List of pumped liquids* on page 94 or contact Grundfos.

For saline or chloride-containing liquids such as sea water, CRTE pumps of titanium are available.

Pump connection

Selection of a pump connection depends on the rated pressure and the pipes. To meet any requirement, the CRE, CRIE and CRNE pumps offer a wide range of flexible connections such as:

- oval flange (NPT), fig. 53
- ANSI flange, fig. 53
- PJE coupling, fig. 53
- clamp coupling
- union (NPT[M])
- other connections on request.

Shaft seal

As standard, the CRE range is fitted with a Grundfos shaft seal of the cartridge type which is suitable for the most common applications. See fig. 54.

The following key parameters must be taken into account, when selecting the shaft seal:

- type of pumped liquid
- liquid temperature
- maximum pressure.

Grundfos offers a wide range of shaft seal variants to meet specific demands. See *List of pumped liquids* on page 94.

Inlet pressure and operating pressure

Do **not** exceed the limit values stated on page 42 and page 39 as regards these pressures:

- maximum inlet pressure and
- maximum operating pressure.

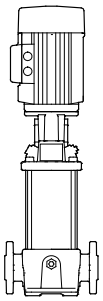

TM03 2155 3805

Fig. 52 CR pump

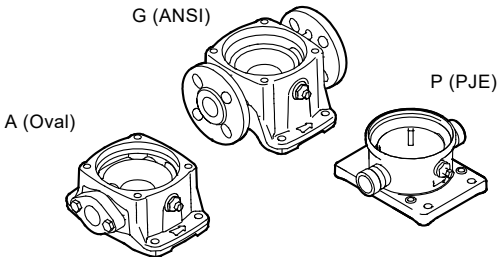

TM02 1201 0601

Fig. 53 Pump connections

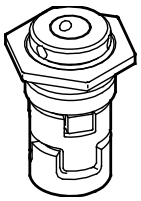

TM02 0538 4800

Fig. 54 Shaft seal (cartridge type)

Minimum inlet pressure - NPSHA

We recommend that you calculate the inlet pressure "H" in these situations:

- The liquid temperature is high.
- The flow rate is significantly higher than the rated flow rate.
- Water is drawn from depths.
- Water is drawn through long pipes.
- Inlet conditions are poor.

To avoid cavitation, make sure that there is a minimum pressure on the inlet side of the pump.

Calculate the maximum suction lift "H" in feet of head as follows:

$H = p_b \times 2.31 - NPSHR - H_f - H_v$

P_b = Barometric pressure in psi.
P_b can be set to 14.7 psi at sea level.
In closed systems, p_b indicates system pressure in feet.

NPSHR = Net Positive Suction Head Required in feet head.
To be read from the NPSHR curve at the highest flow rate the pump will be delivering.

H_f = Friction loss in the inlet pipe in feet of head at the highest flow rate the pump will be delivering.

H_v = Vapor pressure in feet of head.
To be read from the vapor pressure scale.
H_v depends on the liquid temperature T_m.

If the "H" calculated is positive, the pump can operate at a suction lift of maximum "H" feet.

If the "H" calculated is negative, an inlet pressure of minimum "H" feet is required.

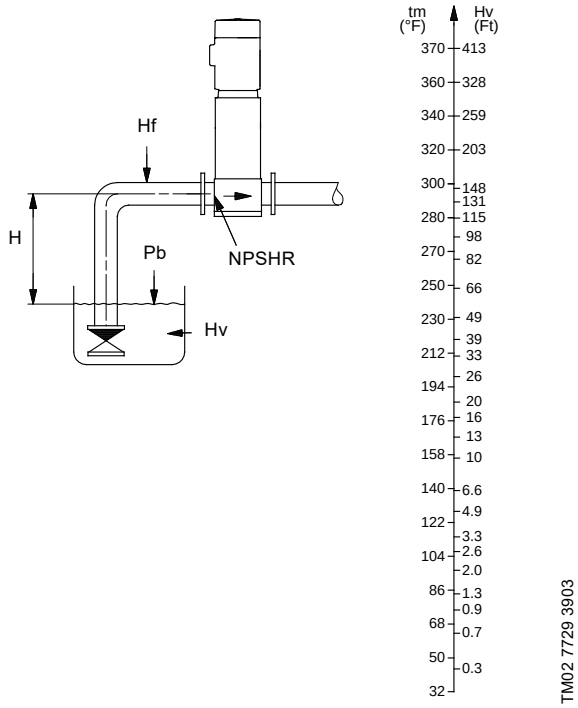

Fig. 55 Minimum inlet pressure - NPSHR

Note:

To avoid cavitation, never select a pump with a duty point too far to the right on the NPSHR curve.

Always check the NPSHR value of the pump at the highest possible flow rate.

In case a lower NPSHR value is required, see *Lists of variants on request* on page 112.

How to read the curve charts

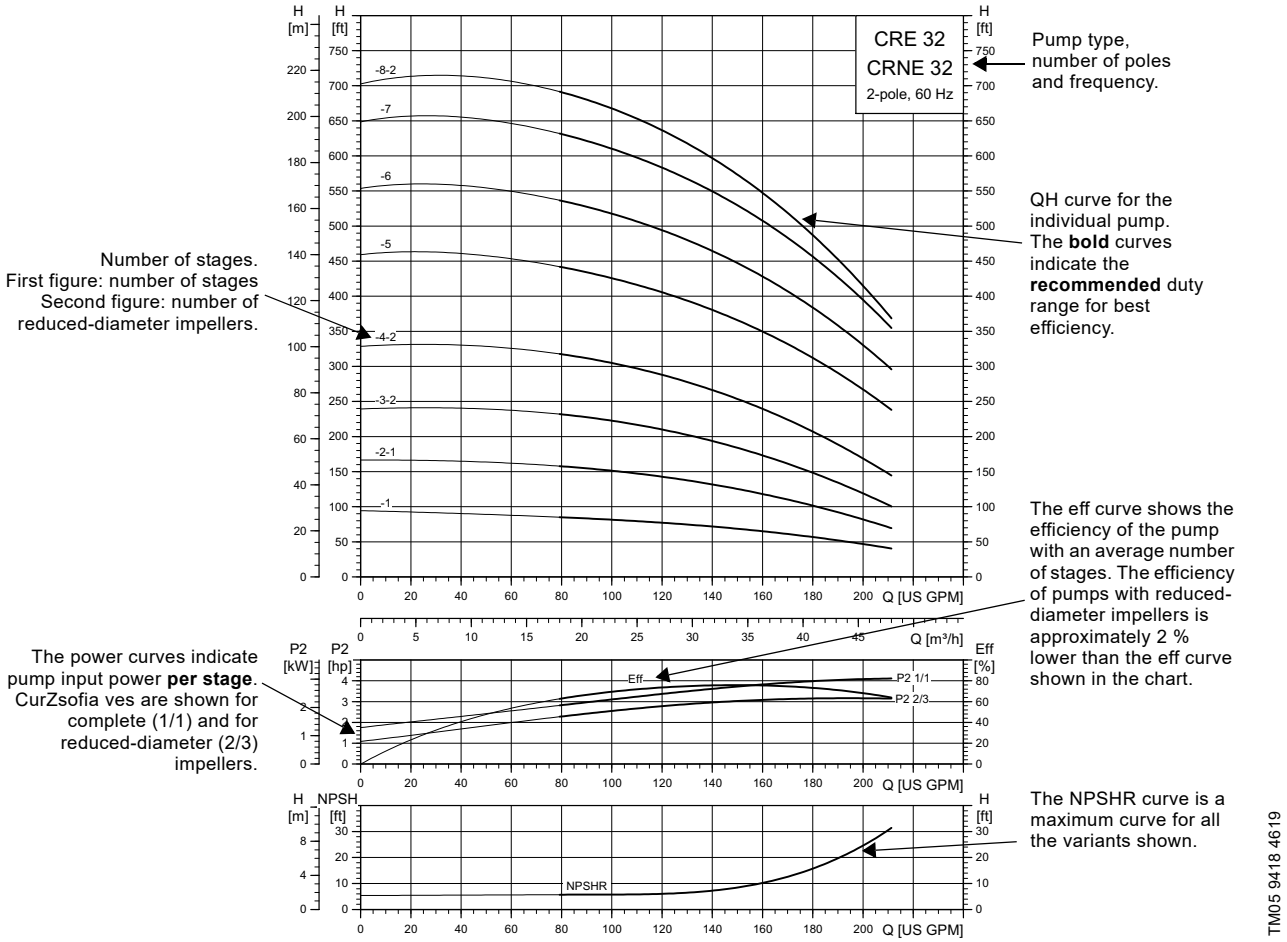

Fig. 56 How to read the curve charts

Guidelines to the performance curves

The guidelines below apply to the curves shown on the following pages:

- Tolerances to ANSI or ISO standards, if indicated on the curve chart.
- The motors used for the measurements are standard motors (ODP, TEFC or MLE).
- Measurements have been made with airless water at a temperature of 68 °F (20 °C).
- The curves apply to the following kinematic viscosity: υ = 1 mm^2/s (1 cSt).
- Due to the risk of overheating, the pumps must not be used at a flow rate below the minimum flow rate.
- The QH curves apply to actual speed with the motor types mentioned at 60 Hz.

The curve below shows the minimum flow rate as a percentage of the rated flow rate in relation to the liquid temperature. The dotted line shows a CRE pump fitted with an air-cooled top assembly.

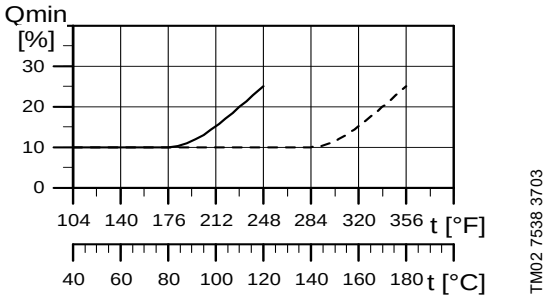

Fig. 57 Minimum flow rate

10. Performance curves and technical data

CRE, CRIE, CRNE 1

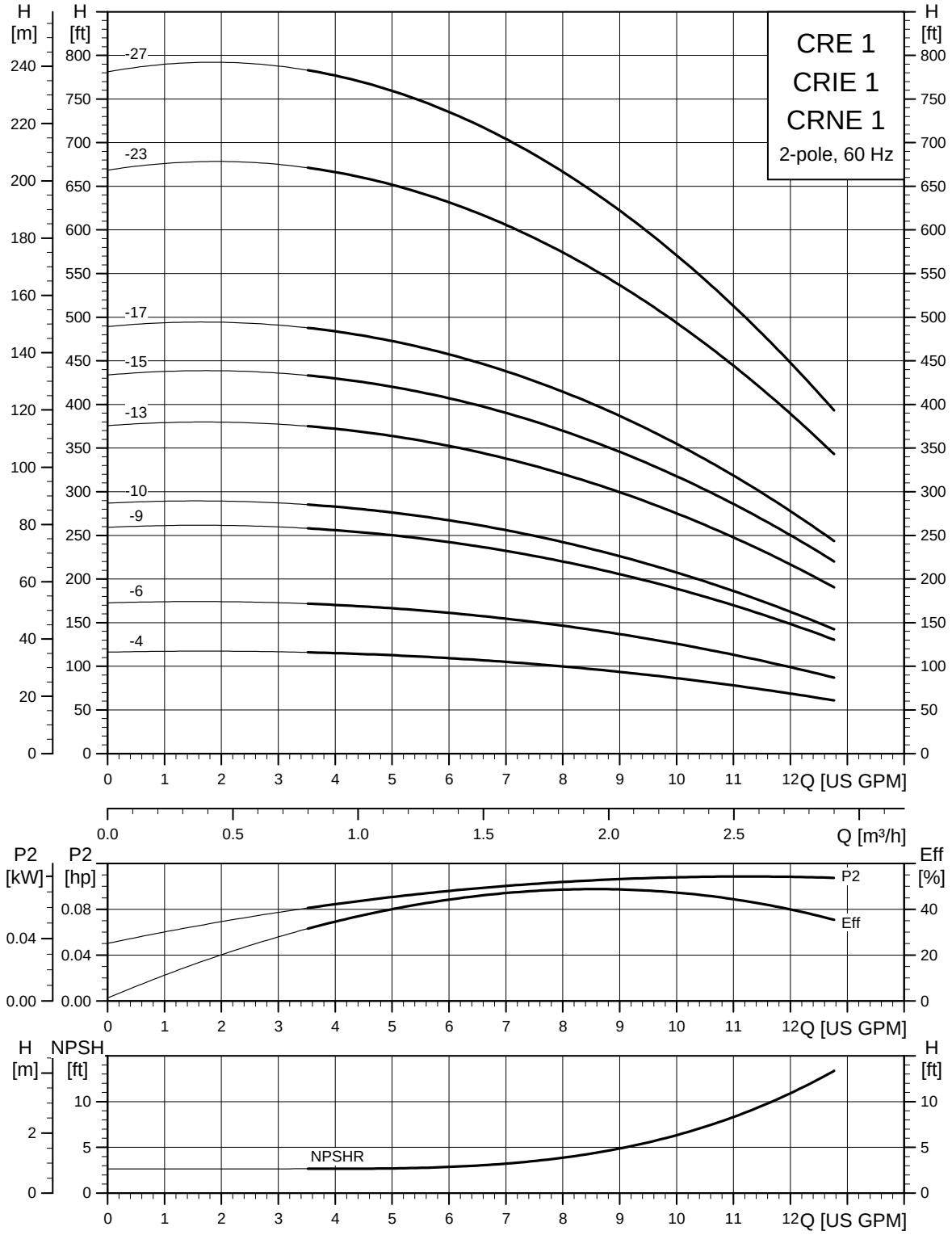

CRE 1 dimensional data

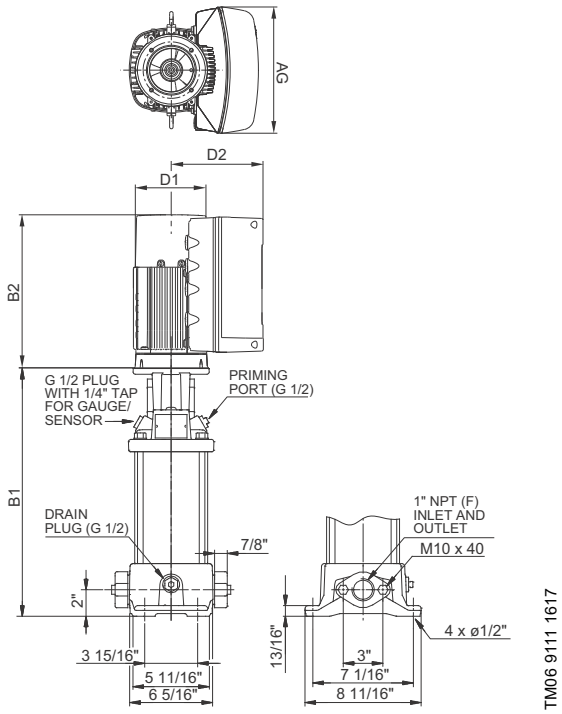

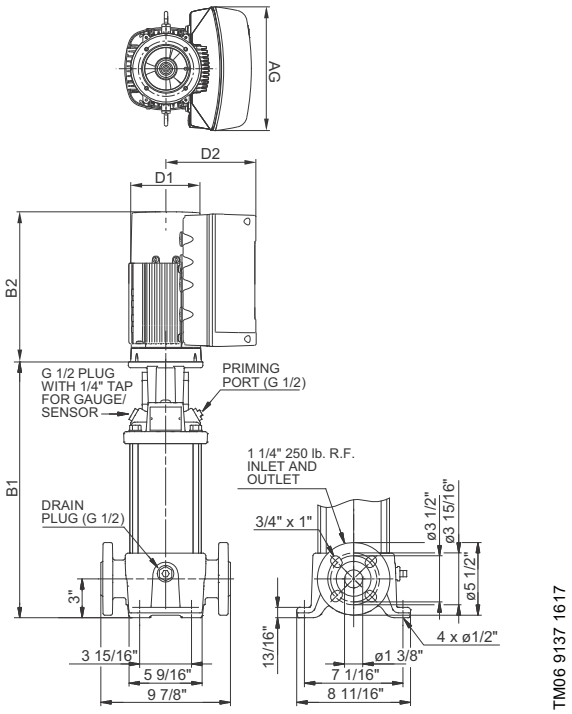

Pump type	[HP (kW)]	PH	Voltage [V]	NEMA frame size	Oval[1]	ANSI B1 [in (mm)]	MLE D1 [in (mm)]	MLE D2 [in (mm)]	AG [in (mm)]	ANSI MLE B1+B2 [in (mm)]	ANSI ship wt. [lbs (kg)]
CRE 1-4	0.5 (0.37)	1	200-240	56C	*	12.68 (322.07)	4.80 (121.92)	6.22 (157.99)	8.34 (212)	21.14 (536.96)	74 (33)
CRE 1-6	0.75 (0.55)	1	200-240	56C	*	14.09 (357.89)	4.80 (121.92)	6.22 (157.99)	8.34 (212)	22.55 (572.77)	76 (34)
CRE 1-9	1 (0.75)	1	200-240	56C	*	16.22 (411.99)	4.80 (121.92)	6.22 (157.99)	8.34 (212)	24.68 (626.87)	79 (36)
		3	440-480	56C	*	16.22 (411.99)	4.80 (121.92)	6.22 (157.99)	10.56 (268)	26.26 (667)	83 (38)
CRE 1-10	1.5 (2)	3	200-240	56C	*	16.93 (430.02)	4.80 (121.92)	6.22 (157.99)	10.56 (268)	26.97 (685.04)	85 (39)
CRE 1-13	1.5 (2)	1	200-240	56C	*	19.06 (484.12)	4.80 (121.92)	6.22 (157.99)	8.34 (212)	27.52 (699.01)	88 (40)
		3	200-240	56C	*	19.06 (484.12)	4.80 (121.92)	6.22 (157.99)	10.56 (268)	29.10 (739.14)	91 (41)
		3	440-480	56C	*	19.06 (484.12)	4.80 (121.92)	6.22 (157.99)	10.56 (268)	29.10 (739.14)	92 (42)
CRE 1-15	2 (1.5)	3	200-240	56C	*	20.47 (519.94)	4.80 (121.92)	6.22 (157.99)	10.56 (268)	31.30 (795.02)	97 (44)
		3	440-480	56C	*	20.47 (519.94)	4.80 (121.92)	6.22 (157.99)	10.56 (268)	31.30 (795.02)	97 (44)
CRE 1-17	2 (1.5)	1	200-240	56C	*	21.89 (556.01)	4.80 (121.92)	6.22 (157.99)	8.34 (212)	31.14 (790.96)	95 (43)
		3	200-240	56C	*	21.89 (556.01)	4.80 (121.92)	6.22 (157.99)	10.56 (268)	32.72 (831.09)	99 (45)
		3	440-480	56C	*	21.89 (556.01)	4.80 (121.92)	6.22 (157.99)	10.56 (268)	32.72 (831.09)	99 (45)
CRE 1-23	3 (2.2)	3	200-240	182TC	-	27.24 (691.90)	7.53 (191.26)	7.91 (200.91)	11.46 (291)	40.39 (1025.91)	128 (58)
		3	440-480	182TC	-	27.24 (691.90)	4.80 (121.92)	6.22 (157.99)	10.56 (268)	38.07 (966.98)	120 (54)
CRE 1-27	3 (2.2)	3	200-240	182TC	-	30.08 (764.03)	7.53 (191.26)	7.91 (200.91)	11.46 (291)	48.23 (1225.04)	131 (59)
		3	440-480	182TC	-	30.08 (764.03)	4.80 (121.92)	6.22 (157.99)	10.56 (268)	43.23 (1098.04)	123 (56)

All dimensions in inches unless otherwise noted.

1 For oval flanged pumps, the B1 and B1+B2 dimensions are one inch less than for ANSI flanged pumps, and the weight is approximately 9 lb (4 kg) less.

* Available.

CRIE 1 dimensional data

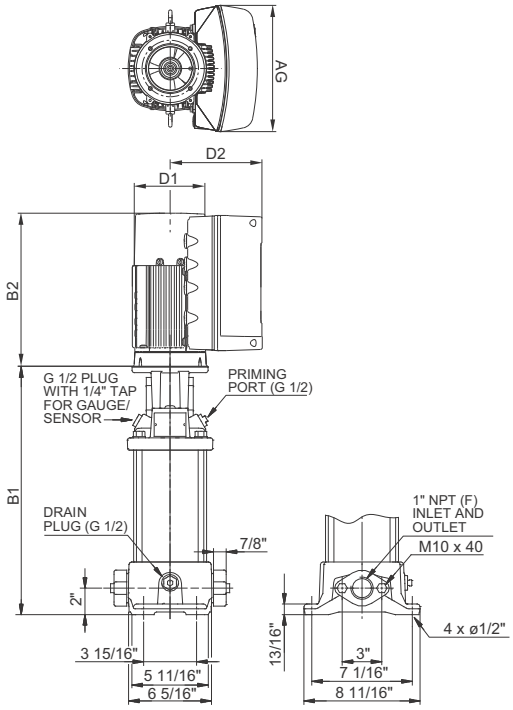

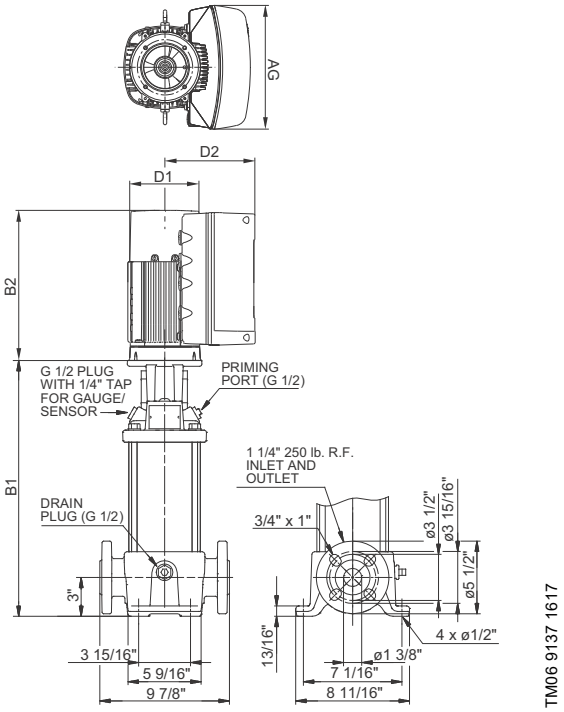

Pump type	[HP (kW)]	PH	Voltage [V]	NEMA frame size	Oval[1]	ANSI B1 [in (mm)]	MLE D1 [in (mm)]	MLE D2 [in (mm)]	AG [in (mm)]	ANSI MLE B1+B2 [in (mm)]	ANSI ship wt. [lbs (kg)]
CRIE 1-4	0.5 (0.37)	1	200-240	56C	*	12.80 (325)	4.80 (122)	6.22 (158)	8.34 (212)	21.26 (540)	69 (31)
CRIE 1-6	0.75 (0.55)	1	200-240	56C	*	14.21 (361)	4.80 (122)	6.22 (158)	8.34 (212)	22.67 (576)	71 (32)
CRIE 1-9	1 (0.75)	1	200-240	56C	*	16.34 (415)	4.80 (122)	6.22 (158)	8.34 (212)	24.80 (630)	74 (34)
		3	440-480	56C	*	16.34 (415)	4.80 (122)	6.22 (158)	10.56 (268)	26.38 (670)	78 (35)
CRIE 1-10	1.5 (1.1)	3	200-240	56C	*	17.05 (433)	4.80 (122)	6.22 (158)	10.56 (268)	27.09 (688)	80 (36)
CRIE 1-13	1.5 (1.1)	1	200-240	56C	*	19.17 (487)	4.80 (122)	6.22 (158)	8.34 (212)	27.63 (702)	83 (38)
		3	200-240	56C	*	19.17 (487)	4.80 (122)	6.22 (158)	10.56 (268)	29.21 (742)	86 (39)
		3	440-480	56C	*	19.17 (487)	4.80 (122)	6.22 (158)	10.56 (268)	29.21 (742)	86 (39)
CRIE 1-15	2 (1.5)	3	200-240	56C	*	20.59 (523)	4.80 (122)	6.22 (158)	10.56 (268)	31.42 (798)	92 (42)
		3	440-480	56C	*	20.59 (523)	4.80 (122)	6.22 (158)	10.56 (268)	31.42 (798)	92 (42)
CRIE 1-17	2 (1.5)	1	200-240	56C	*	22.01 (559)	4.80 (122)	6.22 (158)	8.34 (212)	31.26 (794)	90 (41)
		3	200-240	56C	*	22.01 (559)	4.80 (122)	6.22 (158)	10.56 (268)	32.84 (834)	944 (428)
		3	440-480	56C	*	22.01 (559)	4.80 (122)	6.22 (158)	10.56 (268)	32.84 (834)	94 (43)
CRIE 1-23	3 (2.2)	3	200-240	182TC	-	27.36 (695)	7.53 (191)	7.91 (201)	11.46 (291)	40.51 (1029)	121 (55)
		3	440-480	182TC	-	27.36 (695)	4.80 (122)	6.22 (158)	10.56 (268)	38.19 (970)	113 (51)
CRIE 1-27	3 (2.2)	3	200-240	182TC	-	30.20 (767)	7.53 (191)	7.91 (201)	11.46 (291)	43.35 (1101)	124 (56)
		3	440-480	182TC	-	30.20 (767)	4.80 (122)	6.22 (158)	10.56 (268)	41.03 (1042)	116 (53)

All dimensions in inches unless otherwise noted.

1 For oval flanged pumps, the B1 and B1+B2 dimensions are one inch less than for ANSI flanged pumps, and the weight is approximately 7 lb (3 kg) less.

* Available.

CRNE 1 dimensional data

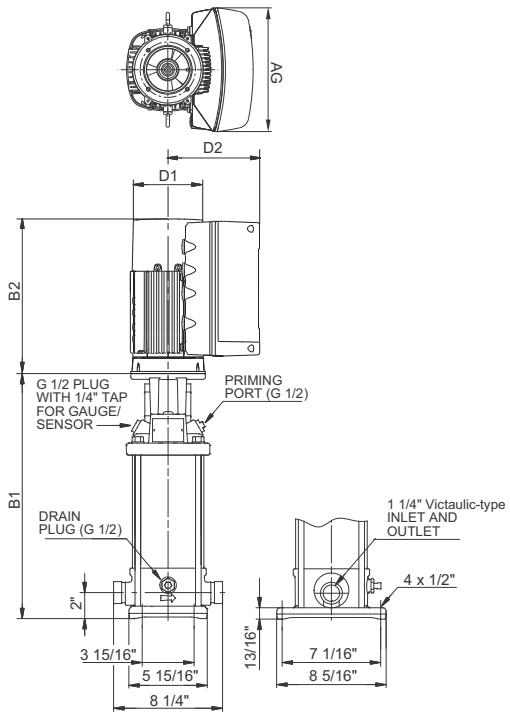

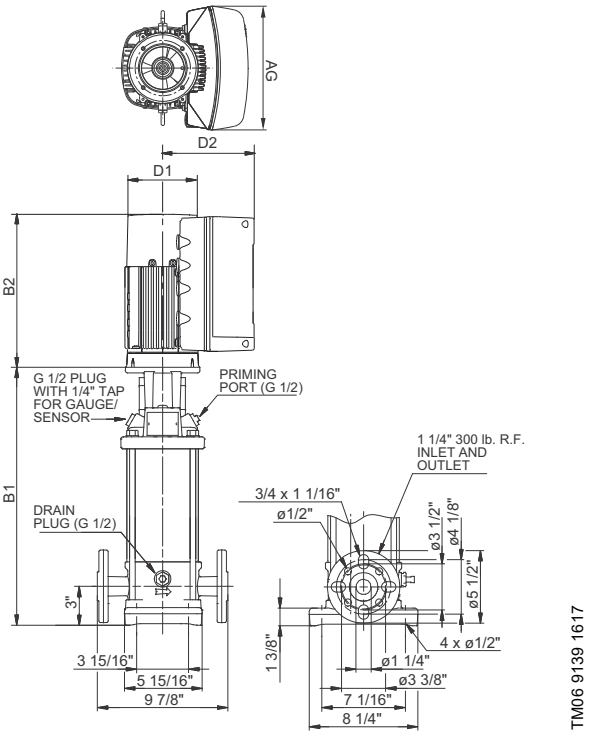

Pump type	[HP (kW)]	PH	Voltage [V]	NEMA frame size	PJE[1]	ANSI B1 [in **(mm)**]	MLE D1 [in **(mm)**]	MLE D2 [in **(mm)**]	AG [in **(mm)**]	ANSI MLE B1+B2 [in **(mm)**]	ANSI ship wt. [lbs **(kg)**]
CRNE 1-4	0.5 (0.37)	1	200-240	56C	*	12.80 (325.12)	4.80 (121.92)	6.22 (157.99)	8.34 (211.84)	21.26 (540.00)	69 (31)
CRNE 1-6	0.75 (0.55)	1	200-240	56C	*	14.21 (360.93)	4.80 (121.92)	6.22 (157.99)	8.34 (211.84)	22.67 (575.82)	71 (32)
CRNE 1-9	1 (0.75)	1	200-240	56C	*	16.34 (415.04)	4.80 (121.92)	6.22 (157.99)	8.34 (211.84)	24.80 (629.92)	74 (34)
		3	440-480	56C	*	16.34 (415.04)	4.80 (121.92)	6.22 (157.99)	10.56 (268.22)	26.38 (670.05)	77 (35)
CRNE 1-10	1.5 (1.1)	3	200-240	56C	*	17.05 (433.07)	4.80 (121.92)	6.22 (157.99)	10.56 (268.22)	27.09 (688.09)	80 (36)
CRNE 1-13	1.5 (1.1)	1	200-240	56C	*	19.17 (486.92)	4.80 (121.92)	6.22 (157.99)	8.34 (211.84)	27.63 (701.80)	82 (37)
		3	200-240	56C	*	19.17 (486.92)	4.80 (121.92)	6.22 (157.99)	10.56 (268.22)	29.21 (741.93)	86 (39)
		3	440-480	56C	*	19.17 (486.92)	4.80 (121.92)	6.22 (157.99)	10.56 (268.22)	29.21 (741.93)	86 (39)
CRNE 1-15	2 (1.5)	3	200-240	56C	*	20.59 (522.99)	4.80 (121.92)	6.22 (157.99)	10.56 (268.22)	31.42 (798.07)	91 (41.2)
		3	440-480	56C	*	20.59 (522.99)	4.80 (121.92)	6.22 (157.99)	10.56 (268.22)	31.42 (798.07)	92 (41.7)
CRNE 1-17	2 (1.5)	1	200-240	56C	*	22.01 (559.05)	4.80 (121.92)	6.22 (157.99)	8.34 (211.84)	31.26 (794.00)	90 (40)
		3	200-240	56C	*	22.01 (559.05)	4.80 (121.92)	6.22 (157.99)	10.56 (268.22)	32.84 (834.14)	93 (42)
		3	440-480	56C	*	22.01 (559.05)	4.80 (121.92)	6.22 (157.99)	10.56 (268.22)	32.84 (834.14)	94 (43)
CRNE 1-23	3 (2.2)	3	200-240	182TC	*	27.36 (694.94)	7.53 (10.09)	7.91 (200.91)	11.46 (291.08)	40.51 (1028.95)	120 (54)
		3	440-480	182TC	*	27.36 (694.94)	4.80 (121.92)	6.22 (157.99)	10.56 (268.22)	38.19 (970.03)	112 (51)
CRNE 1-27	3 (2.2)	3	200-240	182TC	*	30.20 (767.08)	7.53 (10.09)	7.91 (200.91)	11.46 (291.08)	43.35 (1101.09)	124 (56)
		3	440-480	182TC	*	30.20 (767.08)	4.80 (121.92)	6.22 (157.99)	10.56 (268.22)	41.03 (1042.16)	116 (53)

All dimensions in inches unless otherwise noted.

1 For oval flanged pumps, the B1 and B1+B2 dimensions are one inch less than for ANSI flanged pumps, and the weight is approximately 9 lb (4 kg) less.

* Available.

CRE, CRIE, CRNE 3

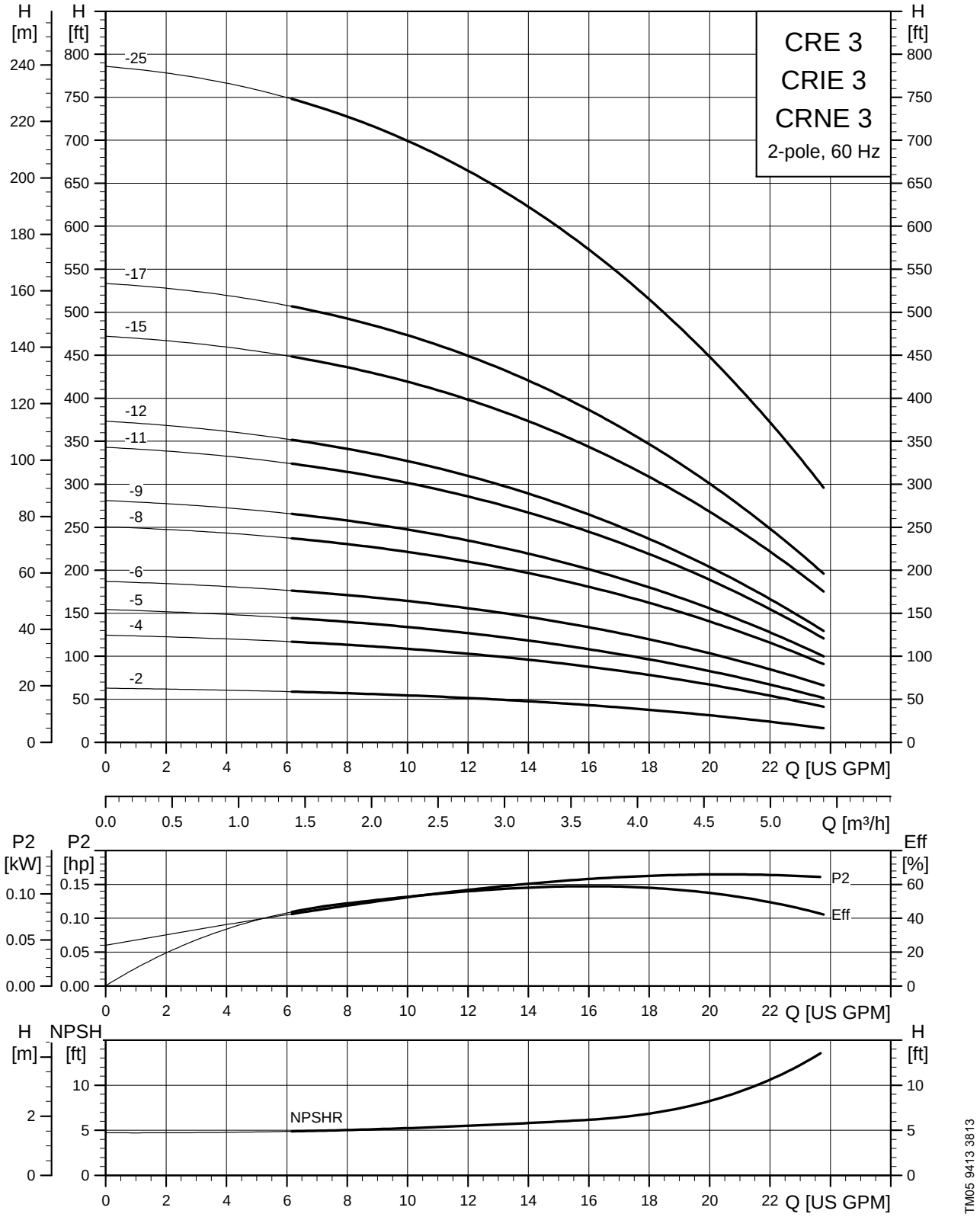

CRE 3 dimensional data

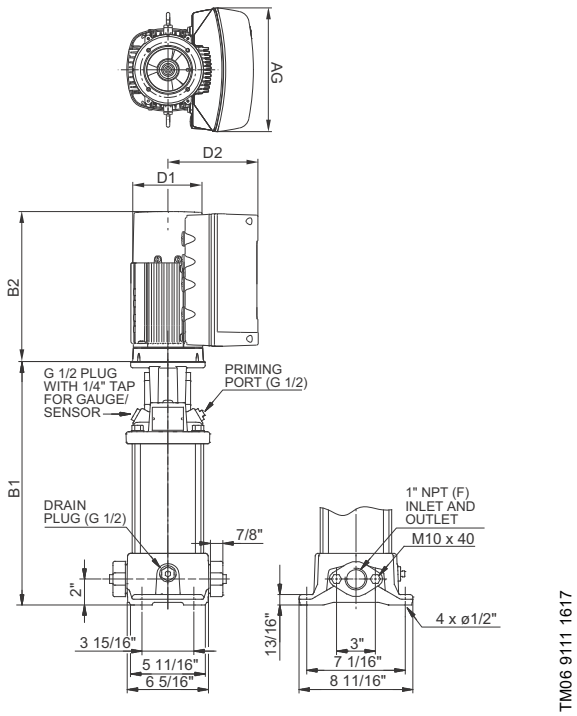

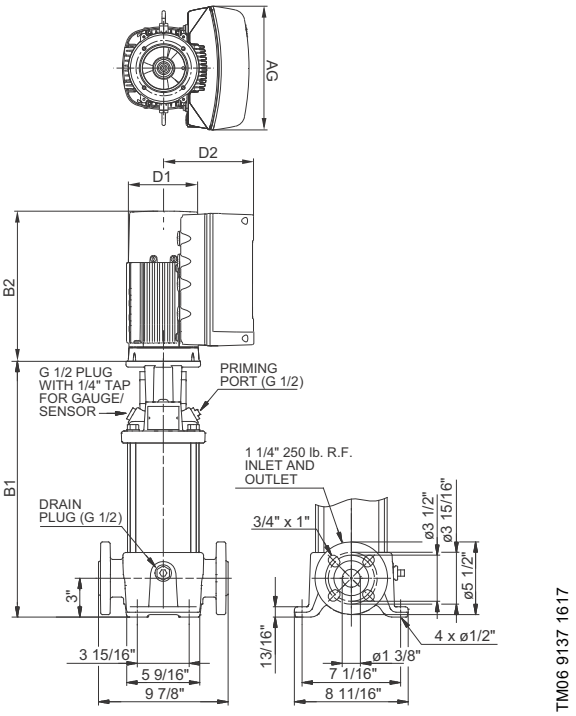

Pump type	[HP (kW)]	PH	Voltage [V]	NEMA frame size	Oval[1]	ANSI B1 [in (mm)]	MLE D1 [in (mm)]	MLE D2 [in (mm)]	AG [in (mm)]	ANSI MLE B1+B2 [in (mm)]	ANSI ship wt. [lbs (kg)]
CRE 3-2	0.5 (0.37)	1	200-240	56C	*	11.97 (304.04)	4.80 (121.92)	6.22 (157.99)	8.34 (211.84)	20.43 (518.92)	73 (33.1)
CRE 3-4	0.75 (0.55)	1	200-240	56C	*	12.68 (322.07)	4.80 (121.92)	6.22 (157.99)	8.34 (211.84)	21.14 (536.96)	74 (33)
CRE 3-5	1 (0.75)	1	200-240	56C	*	13.39 (340.11)	4.80 (121.92)	6.22 (157.99)	8.34 (211.84)	21.85 (554.99)	75 (34)
CRE 3-6	1.5 (1.1)	3	200-240	56C	*	14.09 (357.89)	4.80 (121.92)	6.22 (157.99)	10.56 (268.22)	24.13 (612.90)	82 (37)
	1 (0.75)	3	440-480	56C	*	14.09 (357.89)	4.80 (121.92)	6.22 (157.99)	10.56 (268.22)	24.13 (612.90)	80 (36)
CRE 3-8	1.5 (1.1)	1	200-240	56C	*	15.51 (393.95)	4.80 (121.92)	6.22 (157.99)	8.34 (211.84)	23.97 (608.84)	80 (36)
CRE 3-9	1.5 (1.1)	3	200-240	56C	*	16.22 (411.99)	4.80 (121.92)	6.22 (157.99)	10.56 (268.22)	26.26 (667)	84 (38)
		3	440-480	56C	*	16.22 (411.99)	4.80 (121.92)	6.22 (157.99)	10.56 (268.22)	26.26 (667)	85 (39)
CRE 3-11	2 (1.5)	1	200-240	56C	*	17.64 (448.06)	4.80 (121.92)	6.22 (157.99)	8.34 (211.84)	26.89 (683.01)	90 (41)
CRE 3-12	2 (1.5)	3	200-240	56C	*	18.35 (466.09)	4.80 (121.92)	6.22 (157.99)	10.56 (268.22)	29.18 (741.17)	94 (42)
		3	440-480	56C	*	18.35 (466.09)	4.80 (121.92)	6.22 (157.99)	10.56 (268.22)	29.18 (741.17)	95 (43)
CRE 3-15	3 (2.2)	3	200-240	182TC	*	21.57 (547.88)	7.53 (191.26)	7.91 (200.91)	11.46 (291.08)	34.72 (881.89)	117 (53)
		3	440-480	182TC	*	21.57 (547.88)	4.80 (121.92)	6.22 (157.99)	10.56 (268.22)	32.40 (822.96)	109 (49)
CRE 3-17	3 (2.2)	3	200-240	182TC	*	22.99 (583.95)	7.53 (191.26)	7.91 (200.91)	11.46 (291.08)	36.14 (917.96)	119 (54)
		3	440-480	182TC	*	22.99 (583.95)	4.80 (121.92)	6.22 (157.99)	10.56 (268.22)	33.82 (859.03)	111 (50)
CRE 3-25	5 (4)	3	200-240	182TC	-	28.66 (727.96)	7.53 (191.26)	7.91 (200.91)	11.46 (291.08)	41.81 (1061.97)	136 (62)
		3	440-480	182TC	-	28.66 (727.96)	7.53 (191.26)	7.91 (200.91)	11.46 (291.08)	41.81 (1061.97)	147 (67)

All dimensions in inches unless otherwise noted.

1 For oval flanged pumps, the B1 and B1+B2 dimensions are one inch less than for ANSI flanged pumps, and the weight is approximately 9 lb (4 kg) less.

* Available.

CRIE 3 dimensional data

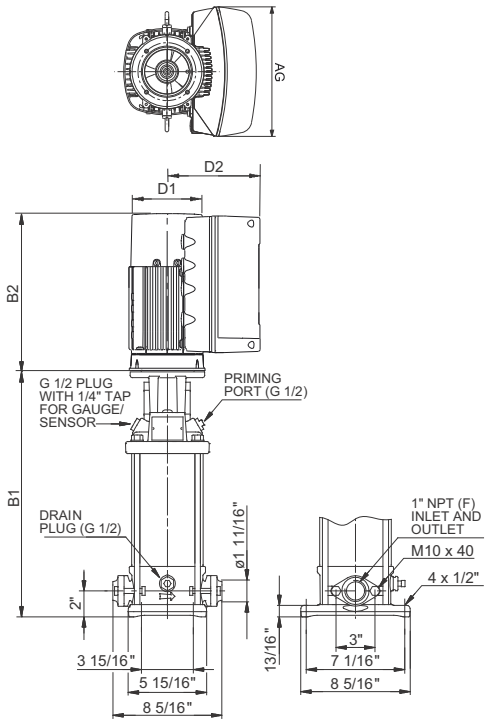

TM06 9140 1617

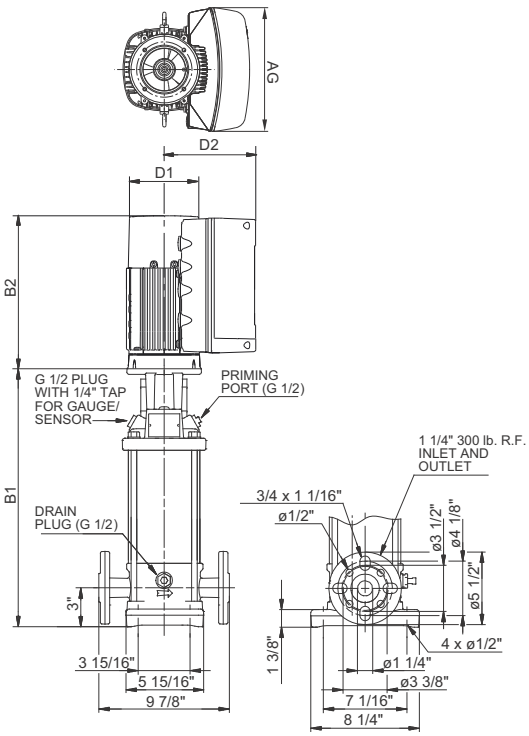

TM06 9139 1617

Pump type	[HP (kW)]	PH	Voltage [V]	NEMA frame size	Oval[1]	ANSI B1 [in (mm)]	MLE D1 [in (mm)]	MLE D2 [in (mm)]	AG [in (mm)]	ANSI MLE B1+B2 [in (mm)]	ANSI ship wt. [lbs (kg)]
CRIE 3-2	0.5 (0.37)	1	200-240	56C	*	12.09 (307)	4.80 (122)	6.22 (158)	8.34 (212)	20.55 (522)	68 (30)
CRIE 3-4	0.75 (0.55)	1	200-240	56C	*	12.80 (325)	4.80 (122)	6.22 (158)	8.34 (212)	21.26 (540)	69 (31)
CRIE 3-5	1 (0.75)	1	200-240	56C	*	13.50 (343)	4.80 (122)	6.22 (158)	8.34 (212)	21.96 (558)	70 (32)
CRIE 3-6	1.5 (1.1)	3	200-240	56C	*	14.21 (361)	4.80 (122)	6.22 (158)	10.56 (268)	24.25 (616)	76 (34.4)
	1 (0.75)	3	440-480	56C	*	14.21 (361)	4.80 (122)	6.22 (158)	10.56 (268)	24.25 (616)	75 (34)
CRIE 3-8	1.5 (1.1)	1	200-240	56C	*	15.63 (397)	4.80 (122)	6.22 (158)	8.34 (212)	24.09 (612)	75 (34)
CRIE 3-9	1.5 (1.1)	3	200-240	56C	*	16.34 (415)	4.80 (122)	6.22 (158)	10.56 (268)	26.38 (670)	79 (36)
		3	440-480	56C	*	16.34 (415)	4.80 (122)	6.22 (158)	10.56 (268)	26.38 (670)	79 (36)
CRIE 3-11	2 (1.5)	1	200-240	56C	*	17.76 (451)	4.80 (122)	6.22 (158)	8.34 (212)	27.01 (686)	84 (38)
CRIE 3-12	2 (1.5)	3	200-240	56C	*	18.46 (469)	4.80 (122)	6.22 (158)	10.56 (268)	29.29 (744)	89 (40)
		3	440-480	56C	*	18.46 (469)	4.80 (122)	6.22 (158)	10.56 (268)	29.29 (744)	89 (40)
CRIE 3-15	3 (2.2)	3	200-240	182TC	*	21.69 (551)	7.53 (191)	7.91 (201)	11.46 (291)	34.84 (885)	110 (50)
		3	440-480	182TC	*	21.69 (551)	4.80 (122)	6.22 (158)	10.56 (268)	32.52 (826)	102 (46)
CRIE 3-17	3 (2.2)	3	200-240	182TC	*	23.11 (587)	7.53 (191)	7.91 (201)	11.46 (291)	36.26 (921)	112 (51)
		3	440-480	182TC	*	23.11 (587)	4.80 (122)	6.22 (158)	10.56 (268)	33.94 (862)	104 (47)
CRIE 3-25	5 (4)	3	200-240	182TC	-	28.78 (731)	7.53 (191)	7.91 (201)	11.46 (291)	41.93 (1065)	129 (59)
		3	440-480	182TC	-	28.78 (731)	7.53 (191)	7.91 (201)	11.46 (291)	41.93 (1065)	140 (64)

All dimensions in inches unless otherwise noted.

1 For oval flanged pumps, the B1 and B1+B2 dimensions are one inch less than for ANSI flanged pumps, and the weight is approximately 9 lb (4 kg) less.

* Available.

CRNE 3 dimensional data

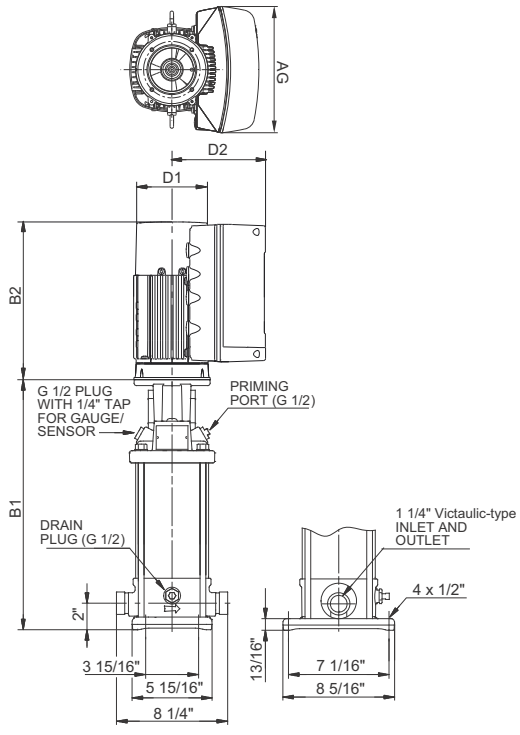

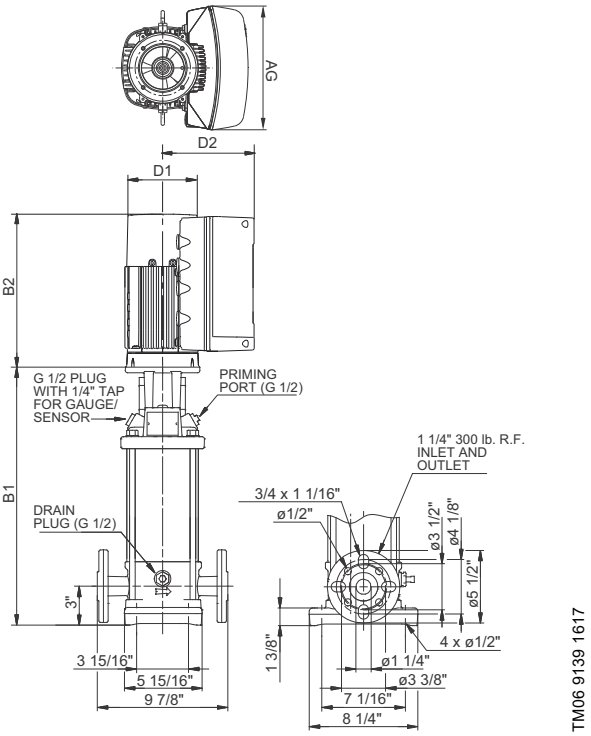

Pump type	[HP (kW)]	PH	Voltage [V]	NEMA frame Size	PJE[1]	ANSI B1 [in (mm)]	MLE D1 [in (mm)]	MLE D2 [in (mm)]	AG [in (mm)]	ANSI MLE B1+B2 [in (mm)]	ANSI ship wt.[lbs (kg)]
CRNE 3-2	0.5 (0.37)	1	200-240	56C	*	12.09 (307.09)	4.80 (121.92)	6.22 (157.99)	8.34 (211.84)	20.55 (521.97)	68 (30)
CRNE 3-4	0.75 (0.55)	1	200-240	56C	*	12.80 (325.12)	4.80 (121.92)	6.22 (157.99)	8.34 (211.84)	21.26 (540)	69 (31)
CRNE 3-5	1 (0.75)	1	200-240	56C	*	13.50 (342.90)	4.80 (121.92)	6.22 (157.99)	8.34 (211.84)	21.96 (557.78)	70 (32)
CRNE 3-6	1.5 (1.1)	3	200-240	56C	*	14.21 (360.93)	4.80 (121.92)	6.22 (157.99)	10.56 (268.22)	24.25 (615.95)	76 (34.4)
	1 (0.75)	3	440-480	56C	*	14.21 (360.93)	4.80 (121.92)	6.22 (157.99)	10.56 (268.22)	24.25 (615.95)	75 (34)
CRNE 3-8	1.5 (1.1)	1	200-240	56C	*	15.63 (397)	4.80 (121.92)	6.22 (157.99)	8.34 (211.84)	24.09 (611.89)	74 (33)
CRNE 3-9	1.5 (1.1)	3	200-240	56C	*	16.34 (415.04)	4.80 (121.92)	6.22 (157.99)	10.56 (268.22)	26.38 (670.05)	79 (36)
		3	440-480	56C	*	16.34 (415.04)	4.80 (121.92)	6.22 (157.99)	10.56 (268.22)	26.38 (670.05)	79 (36)
CRNE 3-11	2 (1.5)	1	200-240	56C	*	17.76 (451.10)	4.80 (121.92)	6.22 (157.99)	8.34 (211.84)	27.01 (686.05)	84 (38)
CRNE 3-12	2 (1.5)	3	200-240	56C	*	18.46 (468.88)	4.80 (121.92)	6.22 (157.99)	10.56 (268.22)	29.29 (743.97)	899 (408)
		3	440-480	56C	*	18.46 (468.88)	4.80 (121.92)	6.22 (157.99)	10.56 (268.22)	29.29 (743.97)	89 (40)
CRNE 3-15	3 (2.2)	3	200-240	182TC	*	21.69 (550.93)	7.53 (191.26)	7.91 (200.91)	11.46 (291.08)	34.84 (884.94)	110 (50)
		3	440-480	182TC	*	21.69 (550.93)	4.80 (121.92)	6.22 (157.99)	10.56 (268.22)	32.52 (826.01)	102 (46)
CRNE 3-17	3 (2.2)	3	200-240	182TC	*	23.11 (586.99)	7.53 (191.26)	7.91 (200.91)	11.46 (291.08)	36.26 (921)	112 (51)
		3	440-480	182TC	*	23.11 (586.99)	4.80 (121.92)	6.22 (157.99)	10.56 (268.22)	33.94 (862.08)	103 (47)
CRNE 3-25	5 (4)	3	200-240	182TC	*	28.78 (731.01)	7.53 (191.26)	7.91 (200.91)	11.46 (291.08)	41.93 (1065.02)	129 (58)
		3	440-480	182TC	*	28.78 (731.01)	7.53 (191.26)	7.91 (200.91)	11.46 (291.08)	41.93 (1065.02)	140 (64)

All dimensions in inches unless otherwise noted.

1 For oval flanged pumps, the B1 and B1+B2 dimensions are one inch less than for ANSI flanged pumps, and the weight is approximately 9 lb (4 kg) less.

* Available.

CRE, CRIE, CRNE 5

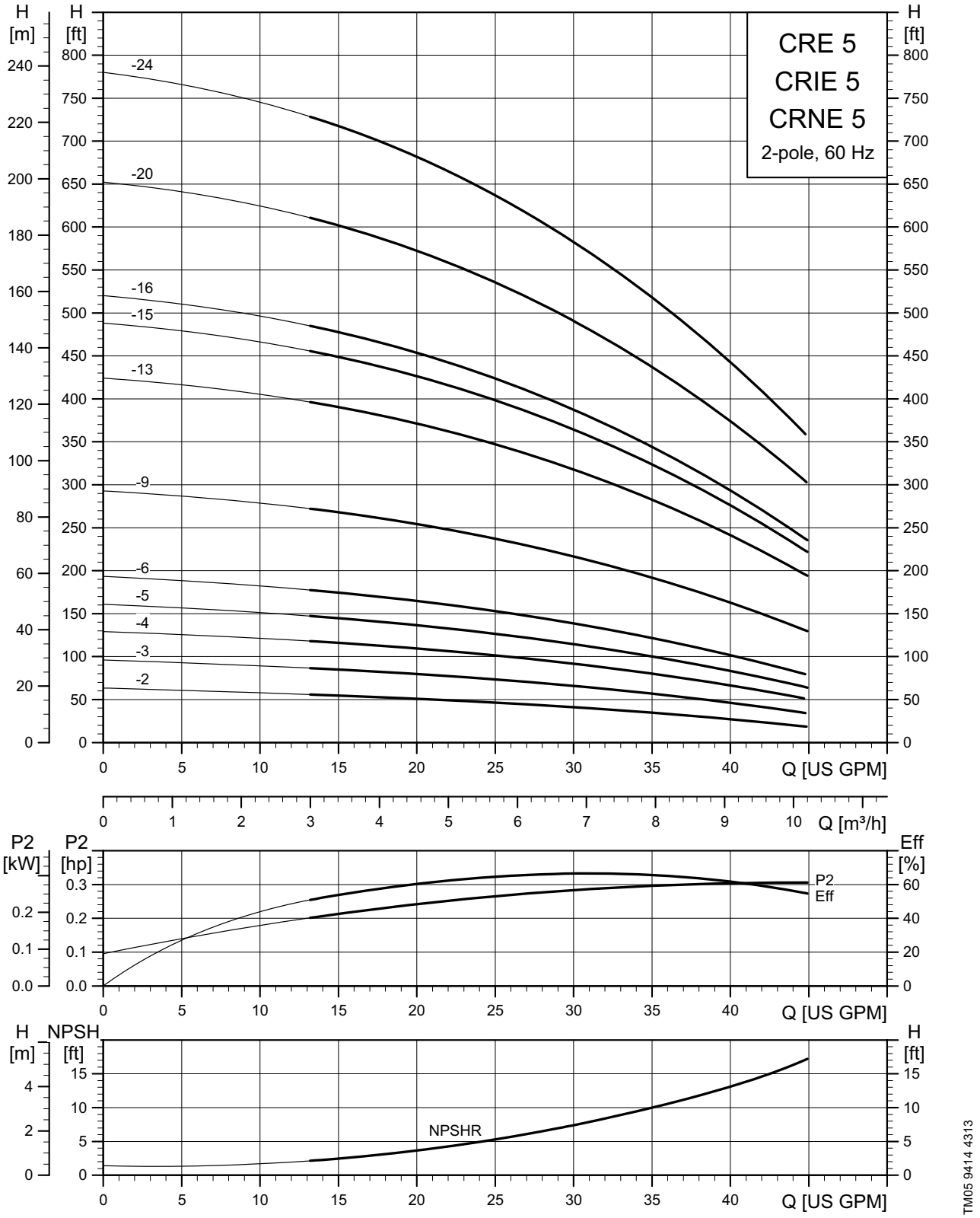

CRE 5 dimensional data

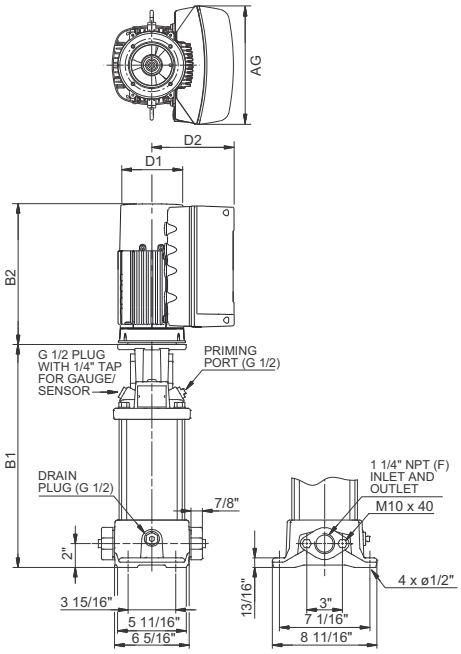

TM06 9143 1717

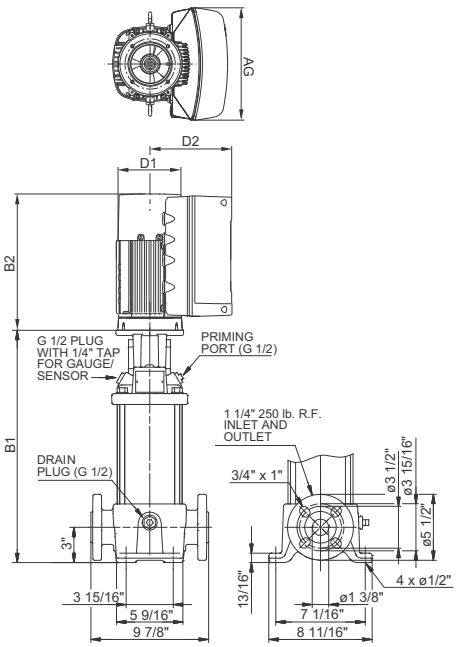

TM06 9137 1617

Pump type	[HP (kW)]	PH	Voltage [V]	NEMA frame size	Oval[1]	ANSI B1 [in (mm)]	MLE D1 [in (mm)]	MLE D2 [in (mm)]	AG [in (mm)]	ANSI MLE B1+B2 [in (mm)]	ANSI ship wt. [lbs (kg)]
CRE 5-2	0.75 (0.55)	1	200-240	56C	*	11.97 (304.04)	4.80 (121.92)	6.22 (157.99)	8.34 (212)	20.43 (518.92)	73 (33)
CRE 5-3	1.5 (1.1)	3	200-240	56C	*	13.03 (330.96)	4.80 (121.92)	6.22 (157.99)	10.56 (268)	23.07 (585.98)	80 (36)
	1 (0.75)	3	440-480	56C	*	13.03 (330.96)	4.80 (121.92)	6.22 (157.99)	10.56 (268)	23.07 (585.98)	79 (36)
CRE 5-4	1.5 (1.1)	1	200-240	56C	*	14.09 (357.89)	4.80 (121.92)	6.22 (157.99)	8.34 (212)	22.55 (572.77)	78 (35)
		3	200-240	56C	*	14.09 (357.89)	4.80 (121.92)	6.22 (157.99)	10.56 (268)	24.13 (612.90)	81 (37)
		3	440-480	56C	*	14.09 (357.89)	4.80 (121.92)	6.22 (157.99)	10.56 (268)	24.13 (612.90)	82 (37)
CRE 5-5	2 (1.5)	1	200-240	56C	*	15.16 (385.06)	4.80 (121.92)	6.22 (157.99)	8.34 (212)	24.41 (620.01)	83 (38)
CRE 5-6	2 (1.5)	3	200-240	56C	*	16.22 (411.99)	4.80 (121.92)	6.22 (157.99)	10.56 (268)	27.05 (687.07)	91 (41)
		3	440-480	56C	*	16.22 (411.99)	4.80 (121.92)	6.22 (157.99)	10.56 (268)	27.05 (687.07)	91 (41)
CRE 5-9	3 (2.2)	3	200-240	182TC	*	20.51 (520.95)	7.53 (191.26)	7.91 (200.91)	11.46 (291)	33.66 (854)	115 (52)
		3	440-480	182TC	*	20.51 (520.95)	4.80 (121.92)	6.22 (157.99)	10.56 (268)	31.34 (796.04)	107 (48)
CRE 5-13	5 (4)	3	200-240	182TC	*	24.76 (628.90)	7.53 (191.26)	7.91 (200.91)	11.46 (291)	37.91 (962.91)	130 (59)
		3	440-480	182TC	*	24.76 (628.90)	7.53 (191.26)	7.91 (200.91)	11.46 (291)	37.91 (962.91)	141 (64)
CRE 5-16	5 (4)	3	200-240	182TC	*	27.95 (709.93)	7.53 (191.26)	7.91 (200.91)	11.46 (291)	41.10 (1043.94)	133 (60)
		3	440-480	182TC	*	27.95 (709.93)	7.53 (191.26)	7.91 (200.91)	11.46 (291)	41.10 (1043.94)	145 (66)
CRE 5-20	7.5 (5.5)	3	200-240	213TC	-	32.72 (831.09)	10.04 (255.02)	9.33 (236.98)	13.62 (346)	48.03 (1219.96)	184 (83)
		3	440-480	213TC	-	32.72 (831.09)	7.53 (191.26)	7.91 (200.91)	11.46 (291)	47.09 (1196.09)	175 (79)
CRE 5-24	7.5 (5.5)	3	200-240	213TC	-	36.97 (939.04)	10.04 (255.02)	9.33 (236.98)	13.62 (346)	52.28 (1327.91)	264 (120)
		3	440-480	213TC	-	36.97 (939.04)	7.53 (191.26)	7.91 (200.91)	11.46 (291)	51.34 (1304.04)	255 (116)

All dimensions in inches unless otherwise noted.

1 For oval flanged pumps, the B1 and B1+B2 dimensions are one inch less than for ANSI flanged pumps, and the weight is approximately 9 lb (4 kg) less.

* Available.

CRIE 5 dimensional data

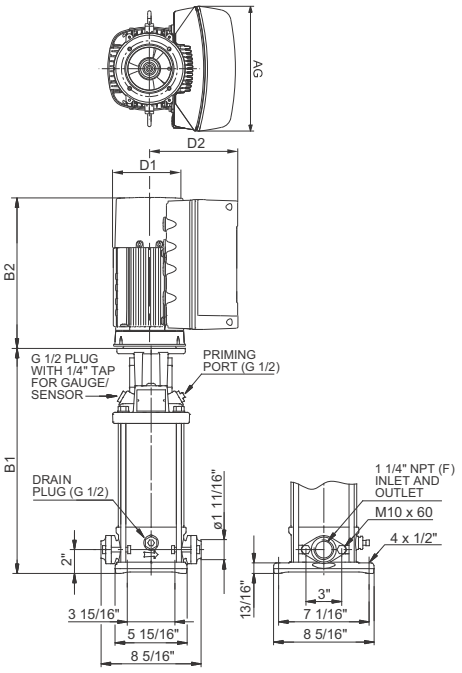

TM06 9148 1717

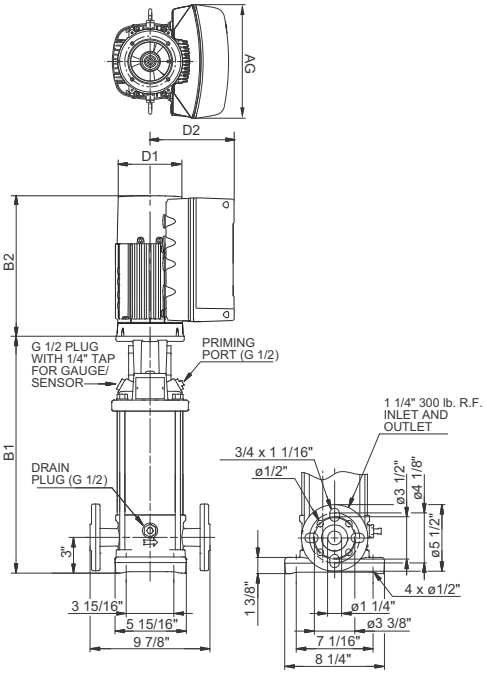

TM06 9139 1617

Pump type	[HP (kW)]	PH	Voltage [V]	NEMA frame Size	Oval[1]	ANSI B1 [in (mm)]	MLE D1 [in (mm)]	MLE D2 [in (mm)]	AG [in (mm)]	ANSI MLE B1+B2 [in (mm)]	ANSI ship wt. [lbs (kg)]
CRIE 5-2	0.75 (0.55)	1	200-240	56C	*	12.09 (307)	4.80 (122)	6.22 (158)	8.34 (212)	20.55 (522)	68 (31)
CRIE 5-3	1.5 (1.1)	3	200-240	56C	*	13.15 (334)	4.80 (122)	6.22 (158)	10.56 (268)	23.19 (589)	75 (34)
	1 (0.75)	3	440-480	56C	*	13.15 (334)	4.80 (122)	6.22 (158)	10.56 (268)	23.19 (589)	73 (33)
CRIE 5-4	1.5 (1.1)	1	200-240	56C	*	14.21 (361)	4.80 (122)	6.22 (158)	8.34 (212)	22.67 (576)	72 (32)
		3	200-240	56C	*	14.21 (361)	4.80 (122)	6.22 (158)	10.56 (268)	24.25 (616)	76 (34.4)
		3	440-480	56C	*	14.21 (361)	4.80 (122)	6.22 (158)	10.56 (268)	24.25 (616)	76 (34.4)
CRIE 5-5	2 (1.5)	1	200-240	56C	*	15.28 (388)	4.80 (122)	6.22 (158)	8.34 (212)	24.53 (623)	78 (35)
CRIE 5-6	2 (1.5)	3	200-240	56C	*	16.34 (415)	4.80 (122)	6.22 (158)	10.56 (268)	27.17 (690)	86 (39)
		3	440-480	56C	*	16.34 (415)	4.80 (122)	6.22 (158)	10.56 (268)	27.17 (690)	86 (39)
CRIE 5-9	3 (2.2)	3	200-240	182TC	*	20.63 (524)	7.53 (191)	7.91 (201)	11.46 (291)	33.78 (858)	108 (49)
		3	440-480	182TC	*	20.63 (524)	4.80 (122)	6.22 (158)	10.56 (268)	31.46 (799)	100 (45)
CRIE 5-13	5 (4)	3	200-240	182TC	*	24.88 (632)	7.53 (191)	7.91 (201)	11.46 (291)	38.03 (966)	123 (56)
		3	440-480	182TC	*	24.88 (632)	7.53 (191)	7.91 (201)	11.46 (291)	38.03 (966)	134 (61)
CRIE 5-16	5 (4)	3	200-240	182TC	*	28.07 (713)	7.53 (191)	7.91 (201)	11.46 (291)	41.22 (1047)	126 (57)
		3	440-480	182TC	*	28.07 (713)	7.53 (191)	7.91 (201)	11.46 (291)	41.22 (1047)	138 (63)
CRIE 5-20	7.5 (5.5)	3	200-240	213TC	-	32.83 (834)	10.04 (255)	9.33 (237)	13.62 (346)	48.14 (1223)	177 (80)
		3	440-480	213TC	-	32.83 (834)	7.53 (191)	7.91 (201)	11.46 (291)	47.20 (1199)	168 (76)
CRIE 5-24	7.5 (5.5)	3	200-240	213TC	-	37.09 (942)	10.04 (255)	9.33 (237)	13.62 (346)	52.40 (1331)	257 (117)
		3	440-480	213TC	-	37.09 (942)	7.53 (191)	7.91 (201)	11.46 (291)	51.46 (1307)	248 (112)

All dimensions in inches unless otherwise noted.

1 For oval flanged pumps, the B1 and B1+B2 dimensions are one inch less than for ANSI flanged pumps, and the weight is approximately 9 lb (4 kg) less.

* Available.

CRNE 5 dimensional data

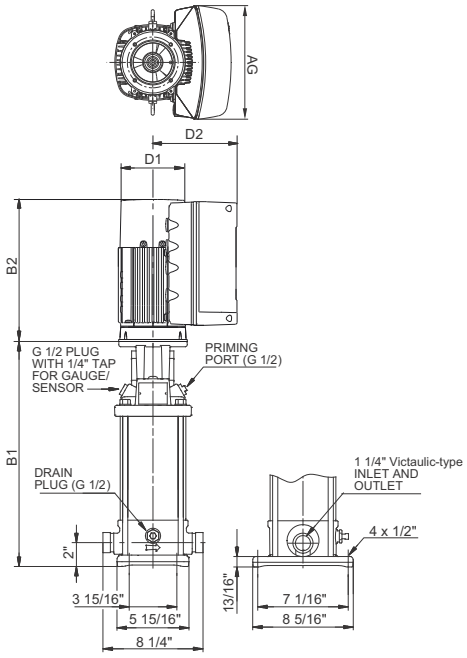

TM06 9138 1617

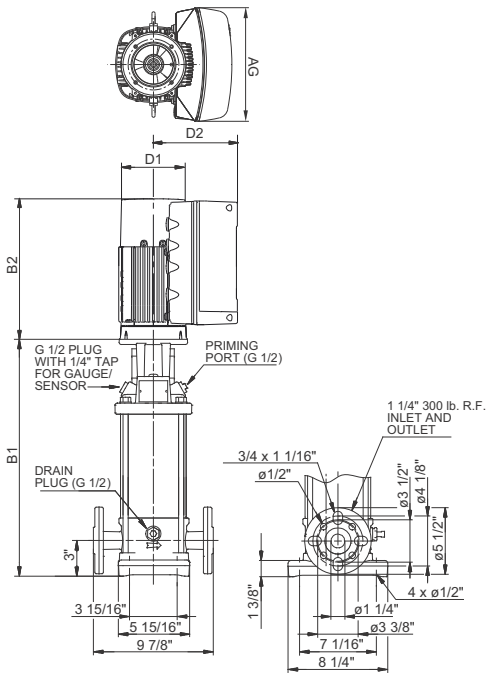

TM06 9139 1617

Pump type	[HP (kW)]	PH	Voltage [V]	NEMA frame size	PJE	ANSI B1 [in (mm)]	MLE D1 [in (mm)]	MLE D2 [in (mm)]	AG [in (mm)]	ANSI MLE B1+B2 [in (mm)]	ANSI ship wt. [lbs (kg)]
CRNE 5-2	0.75 (0.55)	1	200-240	56C	*	12.09 (307.09)	4.80 (121.92)	6.22 (157.99)	8.34 (212)	20.55 (521.97)	68 (31)
CRNE 5-3	1.5 (1.1)	3	200-240	56C	*	13.15 (334.01)	4.80 (121.92)	6.22 (157.99)	10.56 (268)	23.19 (589.03)	75 (34)
	1 (0.75)	3	440-480	56C	*	13.15 (334.01)	4.80 (121.92)	6.22 (157.99)	10.56 (268)	23.19 (589.03)	73 (33)
CRNE 5-4	1.5 (1.1)	1	200-240	56C	*	14.21 (360.93)	4.80 (121.92)	6.22 (157.99)	8.34 (212)	22.67 (575.82)	72 (32)
		3	200-240	56C	*	14.21 (360.93)	4.80 (121.92)	6.22 (157.99)	10.56 (268)	24.25 (615.95)	76 (34.4)
		3	440-480	56C	*	14.21 (360.93)	4.80 (121.92)	6.22 (157.99)	10.56 (268)	24.25 (615.95)	76 (34.4)
CRNE 5-5	2 (1.5)	1	200-240	56C	*	15.28 (388.11)	4.80 (121.92)	6.22 (157.99)	8.34 (212)	24.53 (623.06)	77 (35)
CRNE 5-6	2 (1.5)	3	200-240	56C	*	16.34 (415.04)	4.80 (121.92)	6.22 (157.99)	10.56 (268)	27.17 (690.12)	86 (39)
		3	440-480	56C	*	16.34 (415.04)	4.80 (121.92)	6.22 (157.99)	10.56 (268)	27.17 (690.12)	86 (39)
CRNE 5-9	3 (2.2)	3	200-240	182TC	*	20.63 (524)	7.53 (191.26)	7.91 (200.91)	11.46 (291)	33.78 (858)	108 (49)
		3	440-480	182TC	*	20.63 (524)	4.80 (121.92)	6.22 (157.99)	10.56 (268)	31.46 (799.08)	100 (45)
CRNE 5-13	5 (4)	3	200-240	182TC	*	24.88 (631.95)	7.53 (191.26)	7.91 (200.91)	11.46 (291)	38.03 (965.96)	123 (56)
		3	440-480	182TC	*	24.88 (631.95)	7.53 (191.26)	7.91 (200.91)	11.46 (291)	38.03 (965.96)	134 (61)
CRNE 5-16	5 (4)	3	200-240	182TC	*	28.07 (712.98)	7.53 (191.26)	7.91 (200.91)	11.46 (291)	41.22 (1046.99)	126 (57)
		3	440-480	182TC	*	28.07 (712.98)	7.53 (191.26)	7.91 (200.91)	11.46 (291)	41.22 (1046.99)	138 (63)
CRNE 5-20	7.5 (5.5)	3	200-240	213TC	*	32.83 (833.88)	10.04 (255.02)	9.33 (236.98)	13.62 (346)	48.14 (1222.76)	176 (80)
		3	440-480	213TC	*	32.83 (833.88)	7.53 (191.26)	7.91 (200.91)	11.46 (291)	47.20 (1198.88)	167 (76)
CRNE 5-24	7.5 (5.5)	3	200-240	213TC	*	37.09 (942.09)	10.04 (255.02)	9.33 (236.98)	13.62 (346)	52.40 (1330.96)	256 (116)
		3	440-480	213TC	*	37.09 (942.09)	7.53 (191.26)	7.91 (200.91)	11.46 (291)	51.46 (1307.08)	247 (112)

All dimensions in inches unless otherwise noted.

CRE, CRIE, CRNE 10

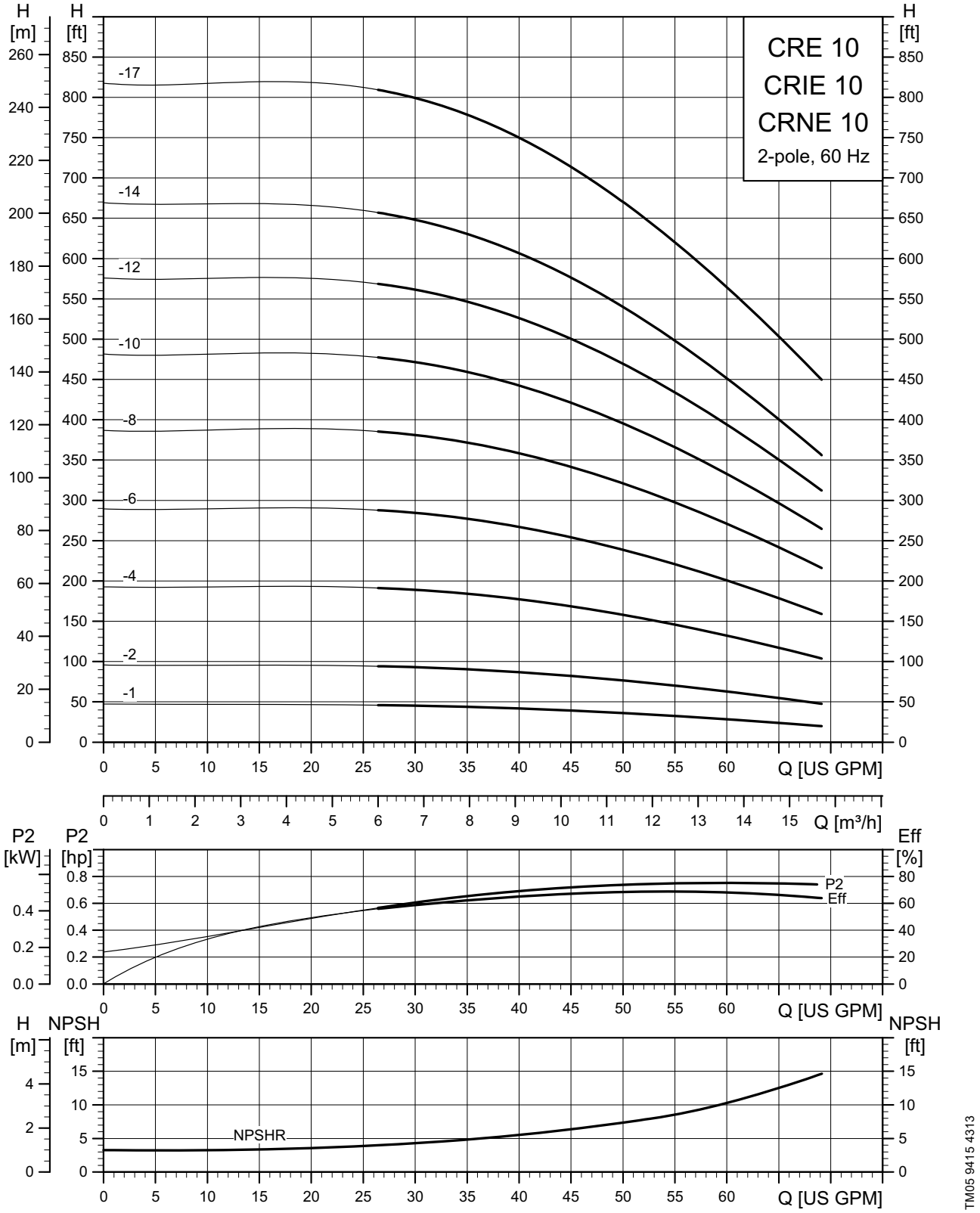

CRE 10 dimensional data

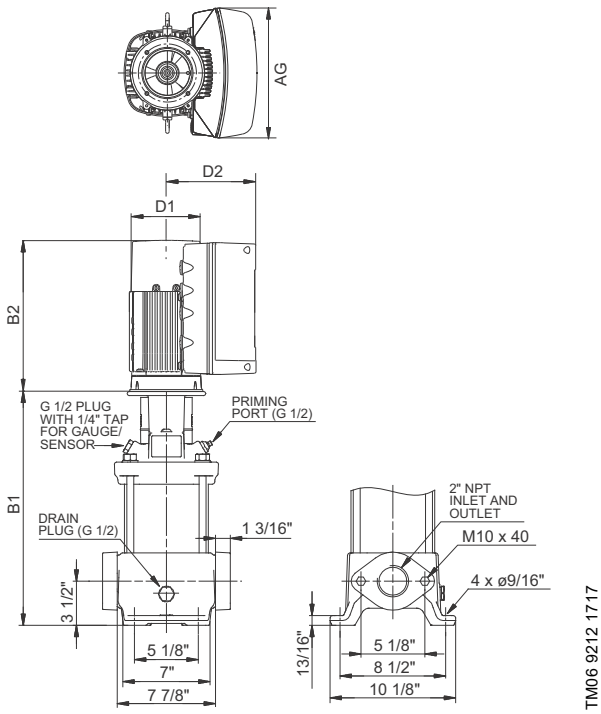

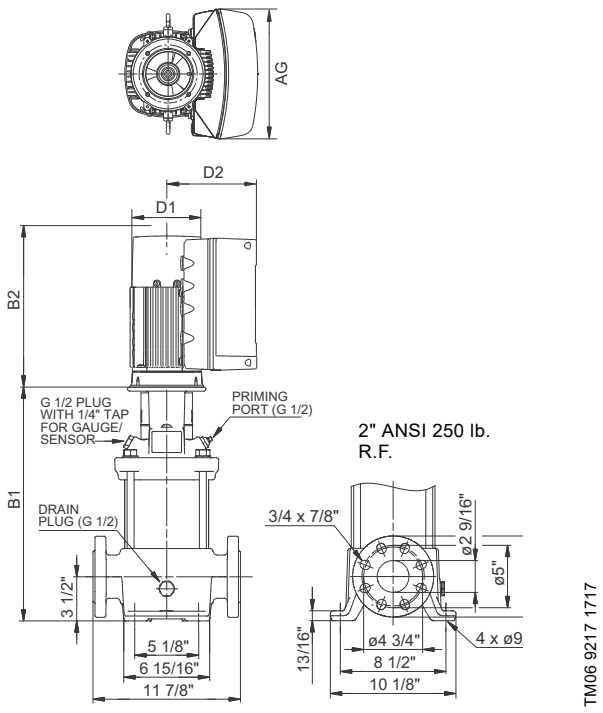

Pump type	[HP (kW)]	PH	Voltage [V]	NEMA frame size	PEI_{VL}	Impeller diameter [in (mm)]	Oval[1]	ANSI B1 [in (mm)]	MLE D1 [in (mm)]	MLE D2 [in (mm)]	AG [in (mm)]	ANSI MLE B1+B2 [in (mm)]	ANSI ship wt. [lbs (kg)]
CRE 10-1	1 (0.75)	1	200-240	56C	0.42	3.66 (92.90)	*	15.28 (388.11)	4.80 (121.92)	6.22 (157.99)	8.34 (212)	23.74 (603)	111 (50)
	1.5 (1.1)	3	200-240	56C	0.43	3.66 (92.90)	*	15.28 (388.11)	4.80 (121.92)	6.22 (157.99)	10.56 (268)	25.32 (643.13)	116 (53)
	1 (0.75)	3	440-480	56C	0.41	3.66 (92.90)	*	15.28 (388.11)	4.80 (121.92)	6.22 (157.99)	10.56 (268)	25.32 (643.13)	114 (52)
CRE 10-2	2 (1.5)	1	200-240	56C	0.41	3.66 (92.90)	*	15.28 (388.11)	4.80 (121.92)	6.22 (157.99)	8.34 (212)	24.53 (623.06)	116 (53)
	1.5 (1.1)	3	200-240	56C	0.43	3.66 (92.90)	*	15.28 (388.11)	4.80 (121.92)	6.22 (157.99)	10.56 (268)	25.32 (643.13)	116 (53)
	1.5 (1.1)	3	440-480	56C	0.41	3.66 (92.90)	*	15.28 (388.11)	4.80 (121.92)	6.22 (157.99)	10.56 (268)	25.32 (643.13)	116 (53)
CRE 10-4	3 (2.2)	3	200-240	182TC	0.41	3.66 (92.90)	*	18.39 (467.11)	7.53 (191.26)	7.91 (200.91)	11.46 (291)	31.54 (801.12)	152 (69)
		3	440-480	182TC	0.40	3.66 (92.90)	*	18.39 (467.11)	4.80 (121.92)	6.22 (157.99)	10.56 (268)	29.22 (742.19)	144 (65)
CRE 10-6	5 (3)	3	200-240	182TC	0.41	3.66 (92.90)	*	20.75 (527.05)	7.53 (191.26)	7.91 (200.91)	11.46 (291)	33.90 (861.06)	164 (74)
		3	440-480	182TC	0.40	3.66 (92.90)	*	20.75 (527.05)	7.53 (191.26)	7.91 (200.91)	11.46 (291)	33.90 (861.06)	175 (79)
CRE 10-8	7.5 (5.5)	3	200-240	213TC	0.41	3.66 (92.90)	-	23.43 (595.12)	10.04 (255.02)	9.33 (236.98)	13.62 (346)	38.74 (984)	216 (98)
		3	440-480	213TC	0.40	3.66 (92.90)	-	23.43 (595.12)	7.53 (191.26)	7.91 (200.91)	11.46 (291)	37.80 (960.12)	207 (94)
CRE 10-10	7.5 (5.5)	3	200-240	213TC	0.41	3.66 (92.90)	-	25.79 (655.07)	10.04 (255.02)	9.33 (236.98)	13.62 (346)	41.10 (1043.94)	220 (100)
		3	440-480	213TC	0.40	3.66 (92.90)	-	25.79 (655.07)	7.53 (191.26)	7.91 (200.91)	11.46 (291)	40.16 (1020.06)	211 (96)
CRE 10-12	10 (7.5)	3	440-480	213TC	0.40	3.66 (92.90)	-	28.15 (715.01)	10.04 (255.02)	9.33 (236.98)	13.62 (346)	43.46 (1103.88)	324 (147)
CRE 10-14	15 (11)	3	440-480	254TC	0.40	3.66 (92.90)	-	33.06 (839.72)	10.04 (255.02)	9.33 (236.98)	13.62 (346)	49.04 (1245.62)	356 (161)
CRE 10-17	15 (11)	3	440-480	254TC	0.40	3.66 (92.90)	-	37.80 (960.12)	10.04 (255.02)	9.33 (236.98)	13.62 (346)	53.78 (1366.01)	372 (169)

All dimensions in inches unless otherwise noted.

1 For oval flanged pumps, the B1 and B1+B2 dimensions are one inch less than ANSI flanged pumps, and the weight is approximately 3 lb (1.3 kg) less.

* Available.

CRIE 10 dimensional data

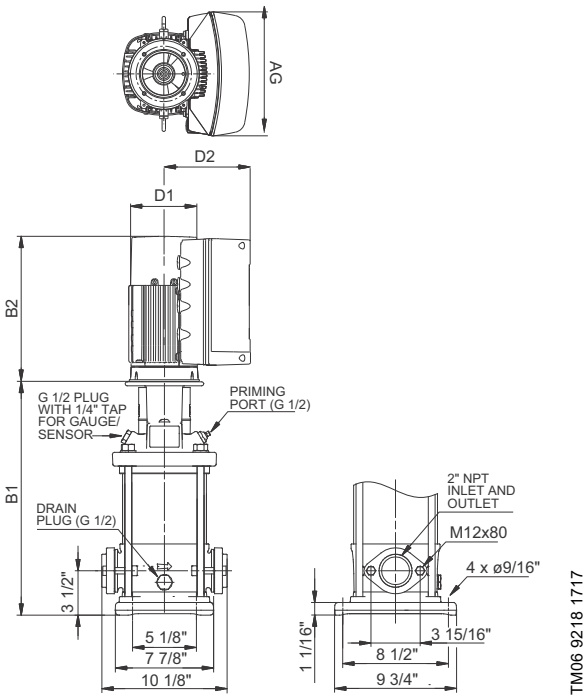

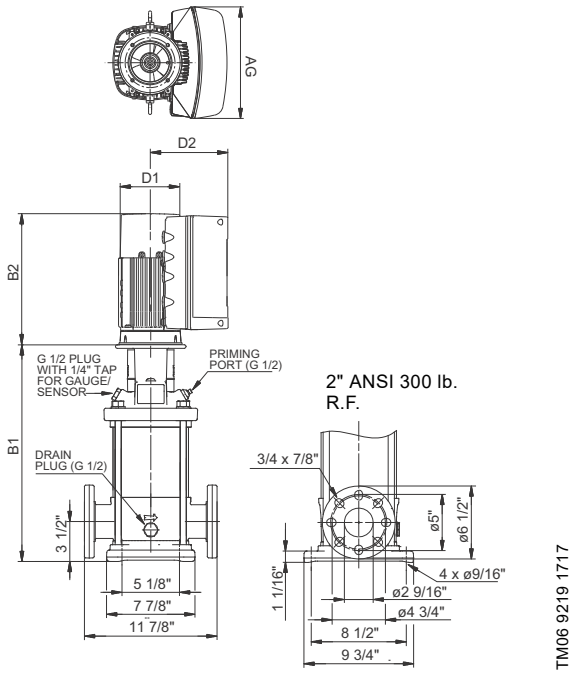

Pump type	[HP (kW)]	PH	Voltage [V]	NEMA frame size	PEI_{VL}	Impeller diameter [in (mm)]	Oval[1]	ANSI B1 [in (mm)]	MLE D1 [in (mm)]	MLE D2 [in (mm)]	AG [in (mm)]	ANSI MLE B1+B2 [in (mm)]	ANSI ship wt. [lbs (kg)]
CRIE 10-1	1 (0.75)	1	200-240	56C	0.42	3.66 (92.90)	*	15.20 (386)	4.80 (122)	6.22 (158)	8.34 (212)	23.66 (601)	100 (45)
	1.5 (1.1)	3	200-240	56C	0.43	3.66 (92.90)	*	15.20 (386)	4.80 (122)	6.22 (158)	10.56 (268)	25.24 (641)	105 (48)
	1 (0.75)	3	440-480	56C	0.41	3.66 (92.90)	*	15.20 (386)	4.80 (122)	6.22 (158)	10.56 (268)	25.24 (641)	103 (47)
CRIE 10-2	2 (1.5)	1	200-240	56C	0.41	3.66 (92.90)	*	15.20 (386)	4.80 (122)	6.22 (158)	8.34 (212)	24.45 (621)	105 (48)
	1.5 (1.1)	3	200-240	56C	0.43	3.66 (92.90)	*	15.20 (386)	4.80 (122)	6.22 (158)	10.56 (268)	25.24 (641)	105 (48)
	1.5 (1.1)	3	440-480	56C	0.41	3.66 (92.90)	*	15.20 (386)	4.80 (122)	6.22 (158)	10.56 (268)	25.24 (641)	105 (48)
CRIE 10-4	3 (2.2)	3	200-240	182TC	0.41	3.66 (92.90)	*	18.31 (465)	7.53 (191)	7.91 (201)	11.46 (291)	31.46 (799)	146 (66)
		3	440-480	182TC	0.40	3.66 (92.90)	*	18.31 (465)	4.80 (122)	6.22 (158)	10.56 (268)	29.14 (740)	138 (63)
CRIE 10-6	5 (4)	3	200-240	182TC	0.41	3.66 (92.90)	*	20.67 (525)	7.53 (191)	7.91 (201)	11.46 (291)	33.82 (859)	157 (71)
		3	440-480	182TC	0.40	3.66 (92.90)	*	20.67 (525)	7.53 (191)	7.91 (201)	11.46 (291)	33.82 (859)	168 (76)
CRIE 10-8	7.5 (5.5)	3	200-240	213TC	0.41	3.66 (92.90)	-	23.35 (593)	10.04 (255)	9.33 (237)	13.62 (346)	38.66 (982)	207 (94)
		3	440	213TC	0.40	3.66 (92.90)	-	23.35 (593)	7.53 (191)	7.91 (201)	11.46 (291)	37.72 (958)	198 (90)
CRIE 10-10	7.5 (5.5)	3	200-240	213TC	0.41	3.66 (92.90)	-	25.71 (653)	10.04 (255)	9.33 (237)	13.62 (346)	41.02 (1042)	211 (96)
		3	440-480	213TC	0.40	3.66 (92.90)	-	25.71 (653)	7.53 (191)	7.91 (201)	11.46 (291)	40.08 (1018)	203 (92)
CRIE 10-12	10 (7.5)	3	440-480	213TC	0.40	3.66 (92.90)	-	28.07 (713)	10.04 (255)	9.33 (237)	13.62 (346)	43.38 (1102)	315 (143)
CRIE 10-14	15 (11)	3	440-480	254TC	0.40	3.66 (92.90)	-	32.95 (837)	10.04 (255)	9.33 (237)	13.62 (346)	48.93 (1243)	350 (159)
CRIE 10-17	15 (11)	3	440-480	254TC	0.40	3.66 (92.90)	-	37.68 (957)	10.04 (255)	9.33 (237)	13.62 (346)	53.66 (1363)	365 (166)

All dimensions in inches unless otherwise noted.

1 For oval flanged pumps, the B1 and B1+B2 dimensions are one inch less than for ANSI flanged pumps, and the weight is approximately 7 lb (3 kg) less.

* Available.

CRNE 10 dimensional data

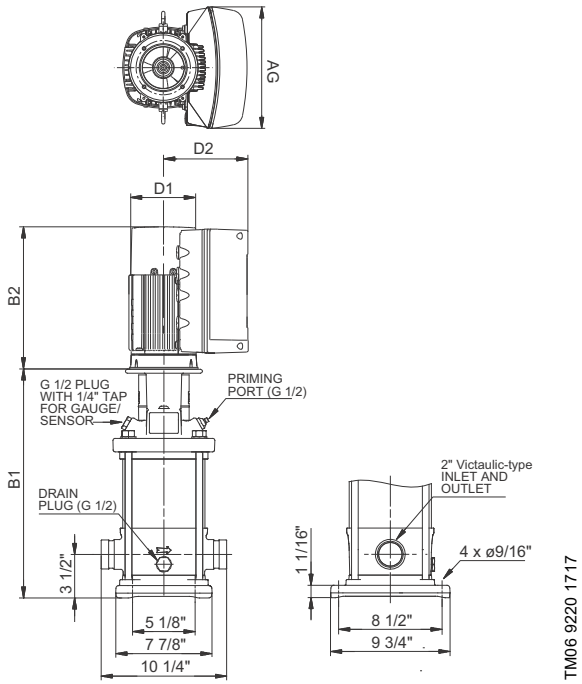

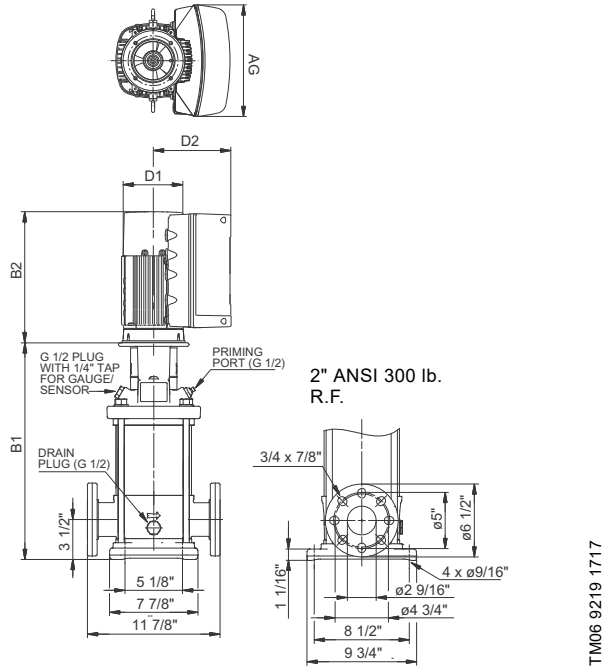

Pump type	[HP (kW)]	PH	Voltage [V]	NEMA frame size	PEI_{VL}	Impeller diameter [in (mm)]	PJE[1]	ANSI B1 [in (mm)]	MLE D1 [in (mm)]	MLE D2 [in (mm)]	AG [in (mm)]	ANSI MLE B1+B2 [in (mm)]	ANSI ship wt. [lbs (kg)]
CRNE 10-1	1 (0.75)	1	200-240	56C	0.42	3.66 (92.90)	*	15.20 (386.08)	4.80 (121.92)	6.22 (157.99)	8.34 (212)	23.66 (600.96)	100 (45)
	1.5 (1.1)	3	200-240	56C	0.43	3.66 (92.90)	*	15.20 (386.08)	4.80 (121.92)	6.22 (157.99)	10.56 (268)	25.24 (641.10)	105 (48)
	1 (0.75)	3	440-480	56C	0.41	3.66 (92.90)	*	15.20 (386.08)	4.80 (121.92)	6.22 (157.99)	10.56 (268)	25.24 (641.10)	103 (47)
CRNE 10-2	2 (1.5)	1	200-240	56C	0.41	3.66 (92.90)	*	15.20 (386.08)	4.80 (121.92)	6.22 (157.99)	8.34 (212)	24.45 (621.03)	105 (48)
	1.5 (1.1)	3	200-240	56C	0.43	3.66 (92.90)	*	15.20 (386.08)	4.80 (121.92)	6.22 (157.99)	10.56 (268)	25.24 (641.10)	105 (48)
	1.5 (1.1)	3	440-480	56C	0.41	3.66 (92.90)	*	15.20 (386.08)	4.80 (121.92)	6.22 (157.99)	10.56 (268)	25.24 (641.10)	105 (48)
CRNE 10-4	3 (2.2)	3	200-240	182TC	0.41	3.66 (92.90)	*	18.31 (465.07)	7.53 (191.26)	7.91 (200.91)	11.46 (291)	31.46 (799.08)	146 (66)
		3	440-480	182TC	0.40	3.66 (92.90)	*	18.31 (465.07)	4.80 (121.92)	6.22 (157.99)	10.56 (268)	29.14 (740.16)	138 (63)
CRNE 10-6	5 (4)	3	200-240	182TC	0.41	3.66 (92.90)	*	20.67 (525.02)	7.53 (191.26)	7.91 (200.91)	11.46 (291)	33.82 (859.03)	157 (71)
		3	440-480	182TC	0.40	3.66 (92.90)	*	20.67 (525.02)	7.53 (191.26)	7.91 (200.91)	11.46 (291)	33.82 (859.03)	168 (76)
CRNE 10-8	7.5 (5.5)	3	200-240	213TC	0.41	3.66 (92.90)	*	23.35 (593.09)	10.04 (255.02)	9.33 (236.98)	13.62 (346)	38.66 (981.96)	207 (94)
		3	440-480	213TC	0.40	3.66 (92.90)	*	23.35 (593.09)	7.53 (191.26)	7.91 (200.91)	11.46 (291)	37.72 (958.09)	198 (90)
CRNE 10-10	7.5 (5.5)	3	200-240	213TC	0.41	3.66 (92.90)	*	25.71 (653.03)	10.04 (255.02)	9.33 (236.98)	13.62 (346)	41.02 (1041.91)	211 (96)
		3	440-480	213TC	0.40	3.66 (92.90)	*	25.71 (653.03)	7.53 (191.26)	7.91 (200.91)	11.46 (291)	40.08 (1018.03)	203 (92)
CRNE 10-12	10 (7.5)	3	440-480	213TC	0.40	3.66 (92.90)	*	28.07 (712.98)	10.04 (255.02)	9.33 (236.98)	13.62 (346)	43.38 (1101.85)	315 (143)
CRNE 10-14	15 (11)	3	440-480	254TC	0.40	3.66 (92.90)	*	32.95 (836.93)	10.04 (255.02)	9.33 (236.98)	13.62 (346)	48.93 (1242.82)	350 (159)
CRNE 10-17	15 (11)	3	440-480	254TC	0.40	3.66 (92.90)	*	37.68 (957.07)	10.04 (255.02)	9.33 (236.98)	13.62 (346)	53.66 (1362.96)	365 (166)

All dimensions in inches unless otherwise noted.

1 For oval flanged pumps, the B1 and B1+B2 dimensions are one inch less than for ANSI flanged pumps, and the weight is approximately 9 lb (4 kg) less.

* Available.

CRE, CRIE, CRNE 15

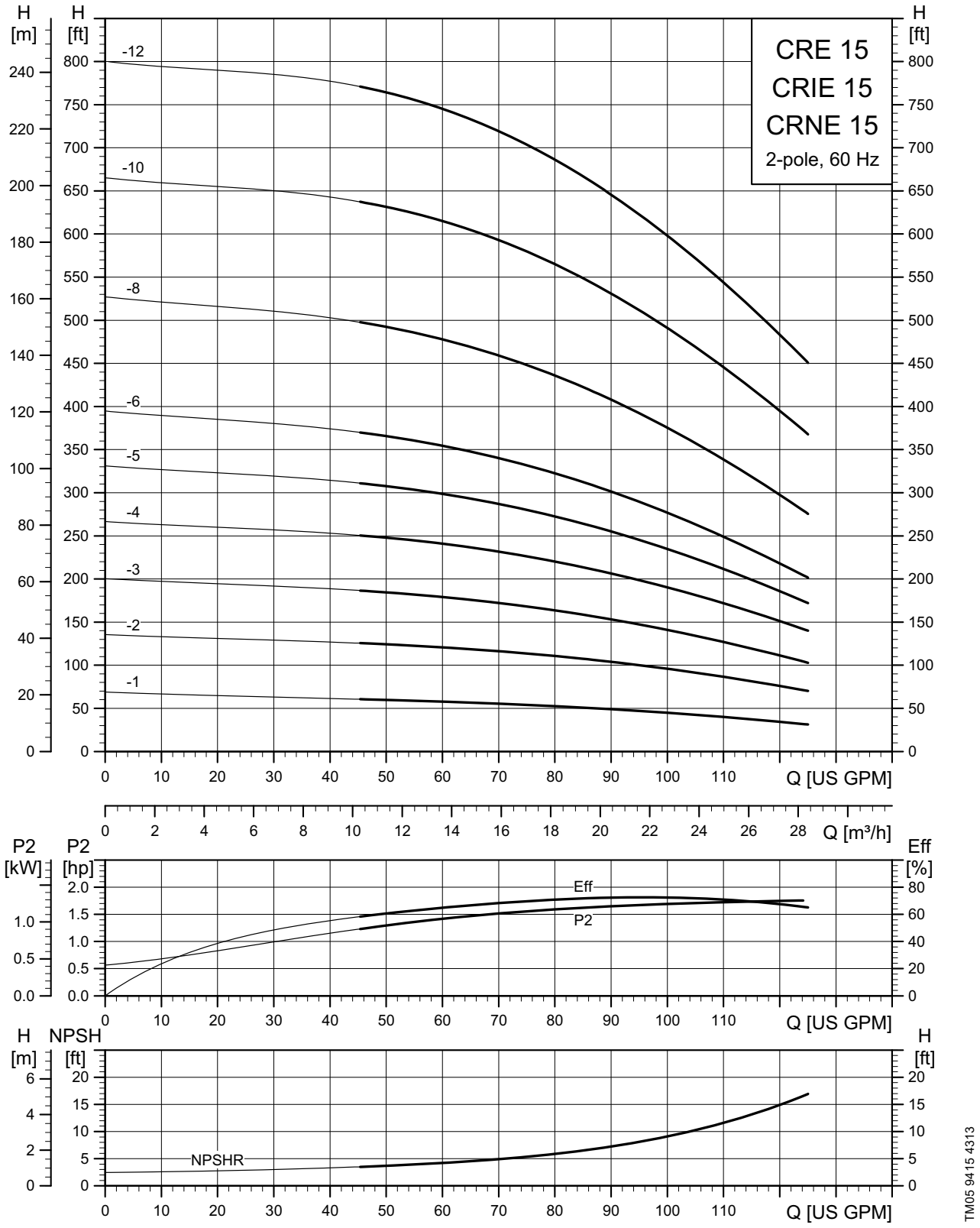

CRE 15 dimensional data

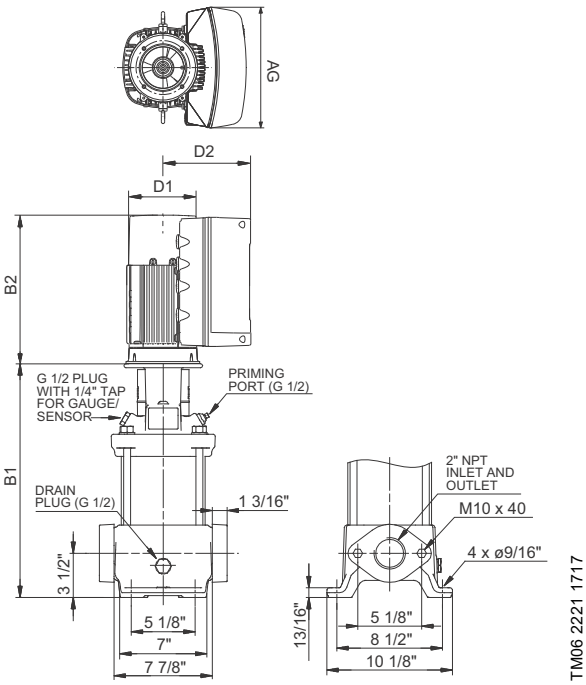

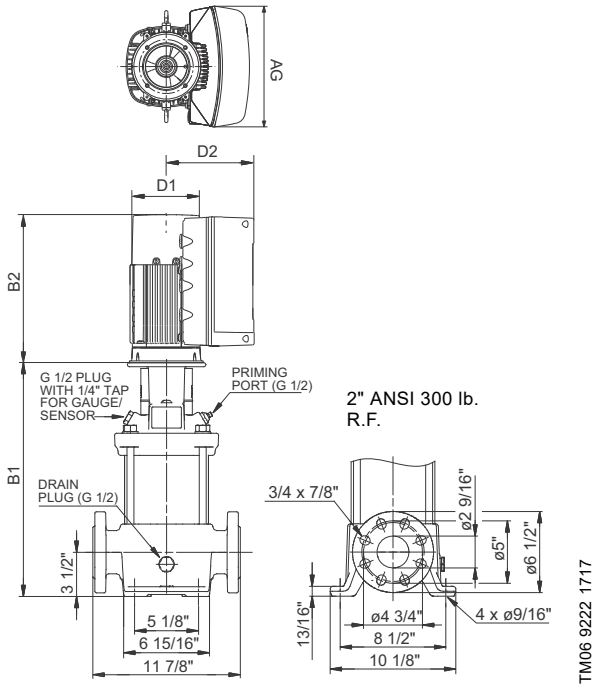

Pump type	[HP (kW)]	PH	Voltage [V]	NEMA frame size	PEI_{VL}	Impeller diameter [in (mm)]	Oval[1]	ANSI B1 [in (mm)]	MLE D1 [in (mm)]	MLE D2 [in (mm)]	AG [in (mm)]	ANSI MLE B1+B2 [in (mm)]	ANSI ship wt. [lbs (kg)]
CRE 15-1	2 (1.5)	1	200-240	56C	0.45	4.13 (104.80)	*	16.46 (418.08)	4.80 (121.92)	6.22 (157.99)	8.34 (212)	25.71 (653.03)	119 (54)
		3	200-240	56C	0.44	4.13 (104.80)	*	16.46 (418.08)	4.80 (121.92)	6.22 (157.99)	10.56 (268)	27.29 (693.17)	122 (55)
		3	440-480	56C	0.46	4.13 (104.80)	*	16.46 (418.08)	4.80 (121.92)	6.22 (157.99)	10.56 (268)	27.29 (693.17)	122 (55)
CRE 15-2	5 (4)	3	200-240	182TC	0.42	4.13 (104.80)	*	17.20 (436.88)	7.53 (191.26)	7.91 (200.91)	11.46 (291)	30.35 (770.89)	157 (71)
		3	440-480	182TC	0.40	4.13 (104.80)	*	17.20 (436.88)	7.53 (191.26)	7.91 (200.91)	11.46 (291)	30.35 (770.89)	168 (76)
CRE 15-3	7.5 (5.5)	3	200-240	213TC	0.42	4.13 (104.80)	*	19.29 (489.97)	10.04 (255.02)	9.33 (236.98)	13.62 (346)	34.60 (878.84)	200 (91)
CRE 15-4	7.5 (5.5)	3	200-240	213TC	0.42	4.13 (104.80)	*	21.06 (534.92)	10.04 (255.02)	9.33 (236.98)	13.62 (346)	36.37 (923.80)	211 (96)
		3	440-480	213TC	0.40	4.13 (104.80)	*	21.06 (534.92)	7.53 (191.26)	7.91 (200.91)	11.46 (291)	35.43 (899.92)	202 (92)
CRE 15-5	10 (7.5)	3	440-480	213TC	0.40	4.13 (104.80)	*	22.83 (579.88)	10.04 (255.02)	9.33 (236.98)	13.62 (346)	38.14 (968.76)	228 (103)
CRE 15-6	15 (11)	3	440-480	254TC	0.40	4.13 (104.80)	-	27.17 (690.12)	10.04 (255.02)	9.33 (236.98)	13.62 (346)	43.15 (1096.01)	255 (116)
CRE 15-8	15 (11)	3	440-480	254TC	0.40	4.13 (104.80)	-	30.71 (780.03)	10.04 (255.02)	9.33 (236.98)	13.62 (346)	46.69 (1185.93)	356 (161)
CRE 15-10	20 (15)	3	460-480	256TC	0.47	4.13 (104.80)	-	34.25 (869.95)	13.55 (344.11)	12.13 (308.10)	16.54 (420)	53.46 (1357.96)	516 (234)
CRE 15-12	25 (18.5)	3	460-480	284TSC	0.47	4.13 (104.80)	-	37.17 (944.12)	13.55 (344.11)	12.13 (308.10)	16.54 (420)	60.32 (1532.21)	551 (250)

All dimensions in inches unless otherwise noted.

1 For oval flanged pumps, the B1 and B1+B2 dimensions are one inch less than for ANSI flanged pumps, and the weight is approximately 3 lb (1.3 kg) less.

* Available.

CRIE 15 dimensional data

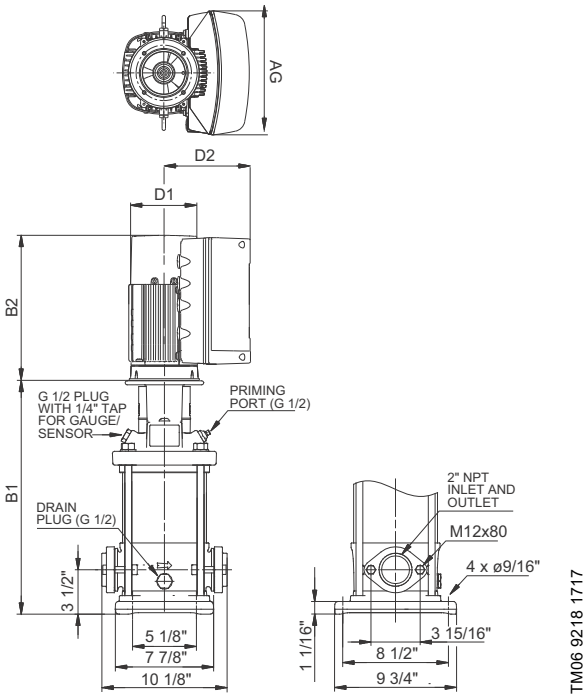

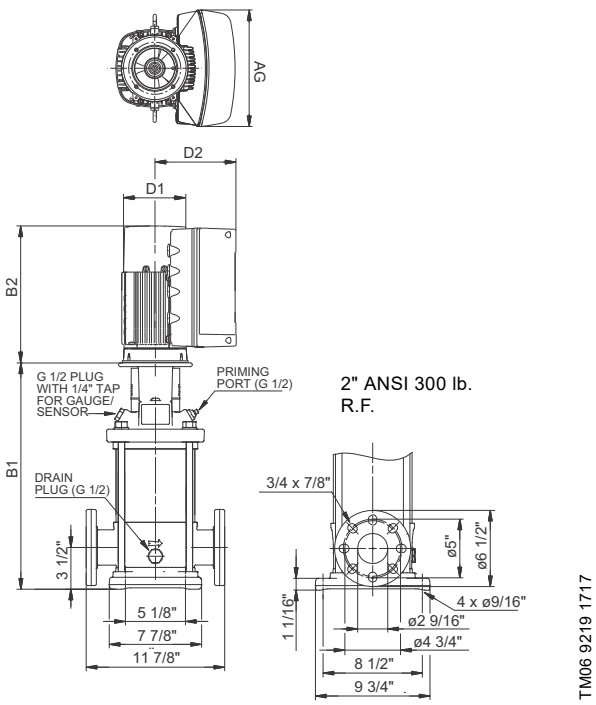

Pump type	[HP (kW)]	PH	Voltage [V]	NEMA frame size	PEI_{VL}	Impeller diameter [in (mm)]	Oval[1]	ANSI B1 [in (mm)]	MLE D1 [in (mm)]	MLE D2 [in (mm)]	AG [in (mm)]	ANSI MLE B1+B2 [in (mm)]	ANSI ship wt. [lbs (kg)]
CRIE 15-1	2 (1.5)	1	200-240	56C	0.45	4.13 (104.80)	*	16.38 (416)	4.80 (122)	6.22 (158)	8.34 (212)	25.63 (651)	110 (50)
		3	200-240	56C	0.44	4.13 (104.80)	*	16.38 (416)	4.80 (122)	6.22 (158)	10.56 (268)	27.21 (691)	113 (51)
		3	440-480	56C	0.46	4.13 (104.80)	*	16.38 (416)	4.80 (122)	6.22 (158)	10.56 (268)	27.21 (691)	113 (51)
CRIE 15-2	5 (4)	3	200-240	182TC	0.42	4.13 (104.80)	*	17.13 (435)	7.53 (191)	7.91 (201)	11.46 (291)	30.28 (769)	150 (68)
		3	440-480	182TC	0.40	4.13 (104.80)	*	17.13 (435)	7.53 (191)	7.91 (201)	11.46 (291)	30.28 (769)	161 (73)
CRIE 15-3	7.5 (5.5)	3	200-240	213TC	0.42	4.13 (104.80)	*	19.21 (488)	10.04 (255)	9.33 (237)	13.62 (346)	34.52 (877)	192 (87)
CRIE 15-4	7.5 (5.5)	3	200-240	213TC	0.42	4.13 (104.80)	*	20.98 (533)	10.04 (255)	9.33 (237)	13.62 (346)	36.29 (922)	202 (92)
		3	440-480	213TC	0.40	4.13 (104.80)	*	20.98 (533)	7.53 (191)	7.91 (201)	11.46 (291)	35.35 (898)	193 (88)
CRIE 15-5	10 (7.5)	3	440-480	213TC	0.40	4.13 (104.80)	*	22.76 (578)	10.04 (255)	9.33 (237)	13.62 (346)	38.07 (967)	228 (103)
CRIE 15-6	15 (11)	3	440-480	254TC	0.40	4.13 (104.80)	-	27.05 (687)	10.04 (255)	9.33 (237)	13.62 (346)	43.03 (1093)	330 (150)
CRIE 15-8	15 (11)	3	440-480	254TC	0.40	4.13 (104.80)	-	30.59 (777)	10.04 (255)	9.33 (237)	13.62 (346)	46.57 (1183)	348 (158)
CRIE 15-10	20 (15)	3	460-480	254TC	0.47	4.13 (104.80)	-	34.13 (867)	13.54 (344)	12.13 (308)	16.54 (420)	53.35 (1355)	509 (231)
CRIE 15-12	25 (18.5)	3	460-480	284TSC	0.47	4.13 (104.80)	-	37.05 (941)	13.54 (344)	12.13 (308)	16.54 (420)	60.20 (1529)	542 (246)

All dimensions in inches unless otherwise noted.

1 For oval flanged pumps, the B1 and B1+B2 dimensions are one inch less than for ANSI flanged pumps, and the weight is approximately 7 lb (3 kg) less.

* Available.

CRNE 15 dimensional data

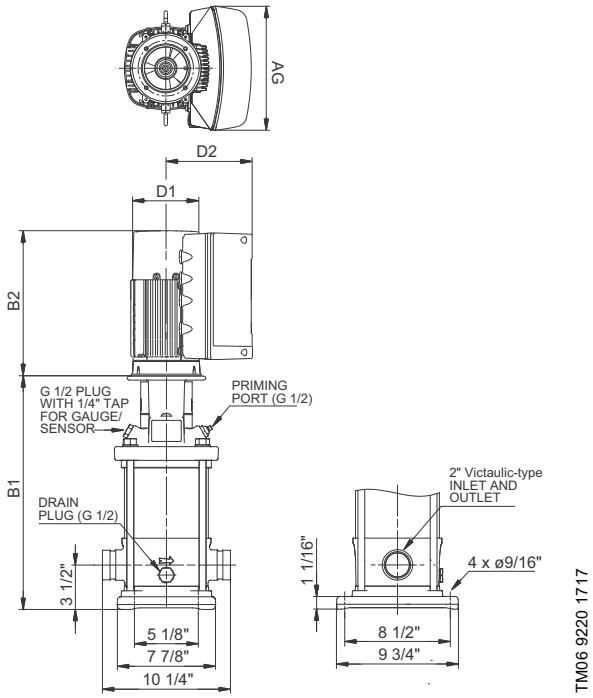

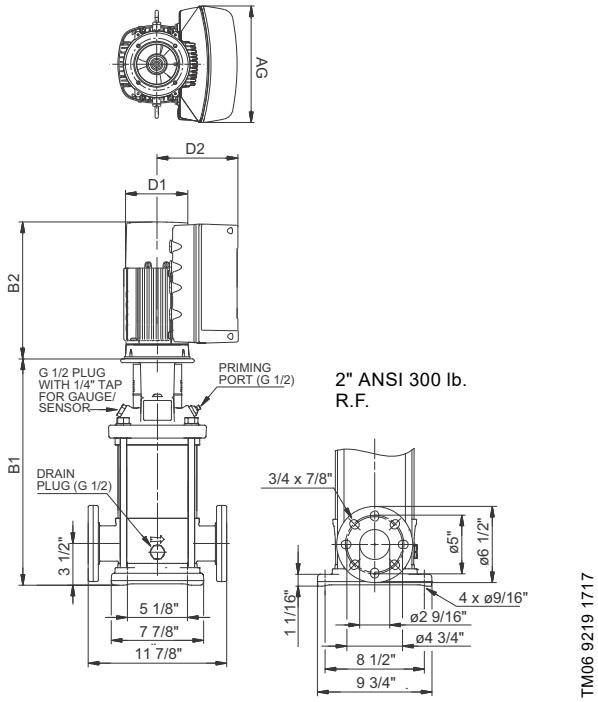

Pump type	[HP (kW)]	PH	Voltage [V]	NEMA frame size	PEI_{VL}	Impeller diameter [in (mm)]	PJE[1]	ANSI B1 [in (mm)]	MLE D1 [in (mm)]	MLE D2 [in (mm)]	AG [in (mm)]	ANSI MLE B1+B2 [in (mm)]	ANSI ship wt. [lbs (kg)]
CRNE 15-1	2 (1.5)	1	200-240	56C	0.45	4.13 (104.80)	*	16.38 (416.05)	4.80 (121.92)	6.22 (157.99)	8.34 (212)	25.63 (651)	110 (50)
		3	200-240	56C	0.44	4.13 (104.80)	*	16.38 (416.05)	4.80 (121.92)	6.22 (157.99)	10.56 (268)	27.21 (691.13)	113 (51)
		3	440-480	56C	0.46	4.13 (104.80)	*	16.38 (416.05)	4.80 (121.92)	6.22 (157.99)	10.56 (268)	27.21 (691.13)	113 (51)
CRNE 15-2	5 (4)	3	200-240	182TC	0.42	4.13 (104.80)	*	17.13 (435.10)	7.53 (191.26)	7.91 (200.91)	11.46 (291)	30.28 (769.11)	150 (68)
		3	440-480	182TC	0.40	4.13 (104.80)	*	17.13 (435.10)	7.53 (191.26)	7.91 (200.91)	11.46 (291)	30.28 (769.11)	161 (73)
CRNE 15-3	7.5 (5.5)	3	200-240	213TC	0.42	4.13 (104.80)	*	19.21 (487.93)	10.04 (255.02)	9.33 (236.98)	13.62 (346)	34.52 (876.81)	192 (87)
CRNE 15-4	7.5 (5.5)	3	200-240	213TC	0.42	4.13 (104.80)	*	20.98 (532.89)	10.04 (255.02)	9.33 (236.98)	13.62 (346)	36.29 (921.77)	202 (92)
		3	440-480	213TC	0.40	4.13 (104.80)	*	20.98 (532.89)	7.53 (191.26)	7.91 (200.91)	11.46 (291)	35.35 (897.89)	193 (88)
CRNE 15-5	10 (7.5)	3	440-480	213TC	0.40	4.13 (104.80)	*	22.76 (578.10)	10.04 (255.02)	9.33 (236.98)	13.62 (346)	38.07 (966.98)	307 (139)
CRNE 15-6	15 (11)	3	440-480	254TC	0.40	4.13 (104.80)	*	27.05 (687.07)	10.04 (255.02)	9.33 (236.98)	13.62 (346)	43.03 (1092.96)	330 (150)
CRNE 15-8	15 (11)	3	440-480	254TC	0.40	4.13 (104.80)	*	30.59 (776.99)	10.04 (255.02)	9.33 (236.98)	13.62 (346)	46.57 (1182.88)	348 (158)
CRNE 15-10	20 (15)	3	460-480	256TC	0.47	4.13 (104.80)	*	34.13 (866.90)	13.55 (344.11)	12.13 (308.10)	16.54 (420)	53.34 (1354.91)	509 (231)
CRNE 15-12	25 (18.5)	3	460-480	284TSC	0.47	4.13 (104.80)	*	37.05 (941.07)	13.55 (344.11)	12.13 (308.10)	16.54 (420)	60.20 (1529.16)	542 (246)

All dimensions in inches unless otherwise noted.

1 For oval flanged pumps, the B1 and B1+B2 dimensions are one inch less than for ANSI flanged pumps, and the weight is approximately 9 lb (4 kg) less.

* Available.

CRE, CRIE, CRNE 20

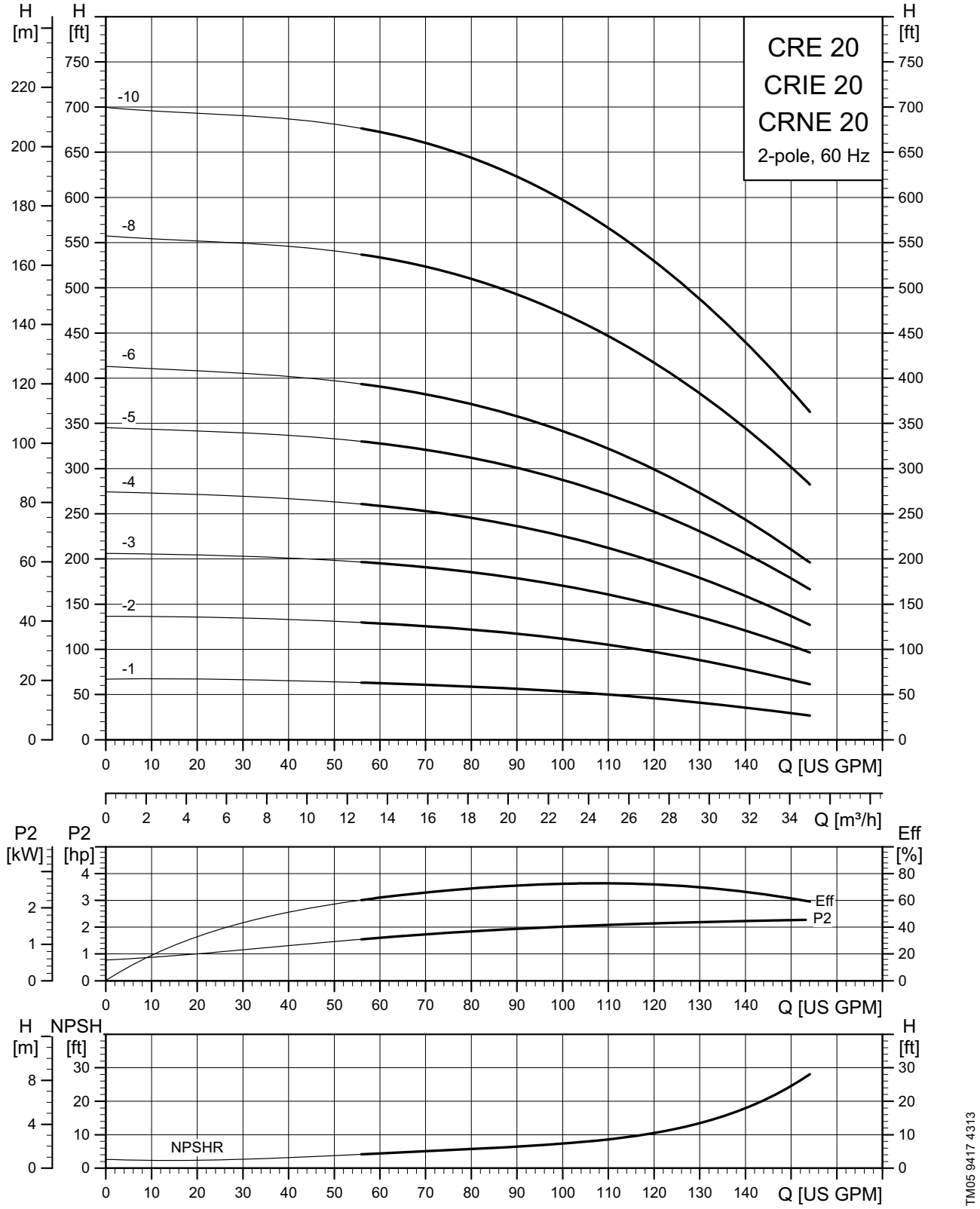

CRE 20 dimensional data

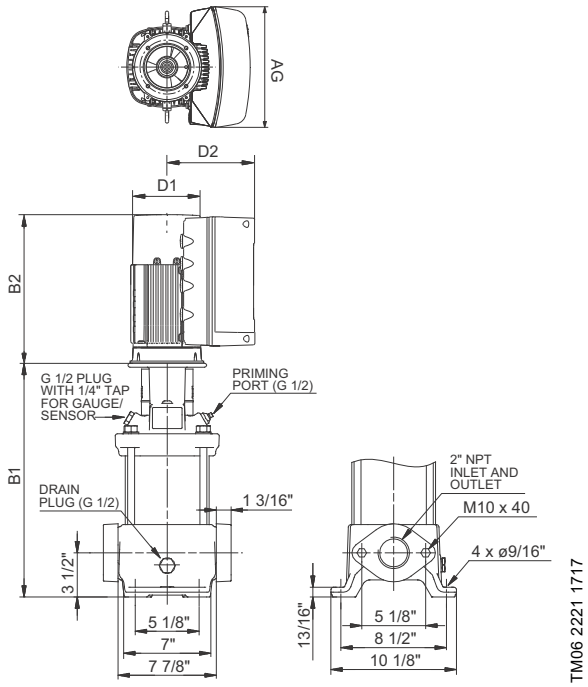

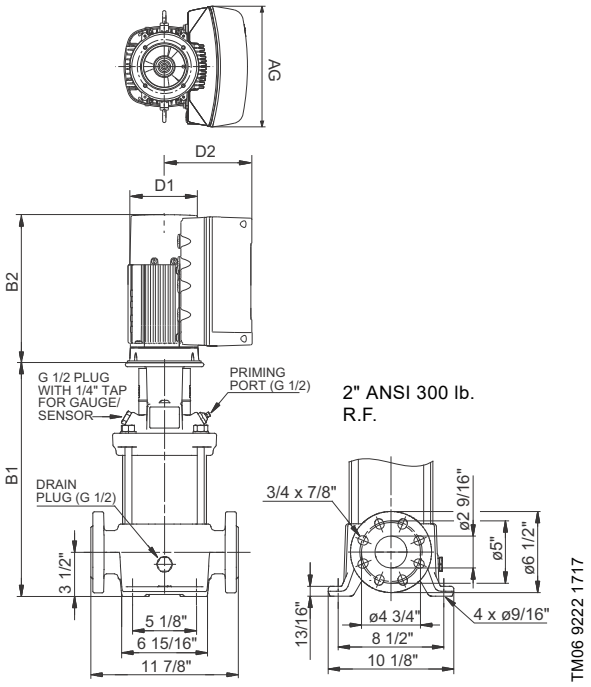

Pump type	[HP (kW)]	PH	Voltage [V]	NEMA frame size	PEI_{vL}	Impeller diameter [in (mm)]	Oval[1]	ANSI B1 [in (mm)]	MLE D1 [in (mm)]	MLE D2 [in (mm)]	AG [in (mm)]	ANSI MLE B1+B2 [in (mm)]	ANSI ship wt. [lbs (kg)]
CRE 20-1	3 (2.2)	3	200-240	182TC	0.42	4.13 (104.80)	*	17.20 (436.88)	7.53 (191.26)	7.91 (200.91)	11.46 (291)	30.35 (770.89)	150 (68)
		3	440-480	182TC	0.41	4.13 (104.80)	*	17.20 (436.88)	4.80 (121.92)	6.22 (157.99)	10.56 (268)	28.03 (711.96)	142 (64)
CRE 20-2	5 (4)	3	200-240	182TC	0.42	4.13 (104.80)	*	17.20 (436.88)	7.53 (191.26)	7.91 (200.91)	11.46 (291)	30.35 (770.89)	157 (71)
		3	440-480	182TC	0.41	4.13 (104.80)	*	17.20 (436.88)	7.53 (191.26)	7.91 (200.91)	11.46 (291)	30.35 (770.89)	168 (76)
CRE 20-3	7.5 (5.5)	3	200-240	213TC	0.42	4.13 (104.80)	*	19.29 (489.97)	10.04 (255.02)	9.33 (236.98)	13.62 (346)	34.60 (878.84)	206 (93)
		3	440-480	213TC	0.41	4.13 (104.80)	*	19.29 (489.97)	7.53 (191.26)	7.91 (200.91)	11.46 (291)	33.66 (854.96)	197 (89)
CRE 20-4	10 (7.5)	3	440-480	213TC	0.41	4.13 (104.80)	*	21.06 (534.92)	10.04 (255.02)	9.33 (236.98)	13.62 (346)	36.37 (923.80)	232 (105)
CRE 20-5	15 (11)	3	440-480	254TC	0.41	4.13 (104.80)	*	25.39 (644.91)	10.04 (255.02)	9.33 (236.98)	13.62 (346)	41.37 (1050.80)	341 (155)
CRE 20-6	15 (11)	3	440-480	254TC	0.41	4.13 (104.80)	-	27.17 (690.12)	10.04 (255.02)	9.33 (236.98)	13.62 (346)	43.15 (1096.01)	343 (156)
CRE 20-8	20 (15)	3	460-480	256TC	0.46	4.13 (104.80)	-	30.71 (780.03)	13.55 (344.11)	12.13 (308.10)	16.54 (420)	49.92 (1268.06)	507 (230)
CRE 20-10	25 (18.5)	3	460-480	284TSC	0.46	4.13 (104.80)	-	33.62 (853.95)	13.55 (344.11)	12.13 (308.10)	16.54 (420)	56.77 (1442.04)	542 (246)

All dimensions in inches unless otherwise noted.

1 For oval flanged pumps, the B1 and B1+B2 dimensions are one inch less than for ANSI flanged pumps, and the weight is approximately 3 lb (1.3 kg) less.

* Available.

CRIE 20 dimensional data

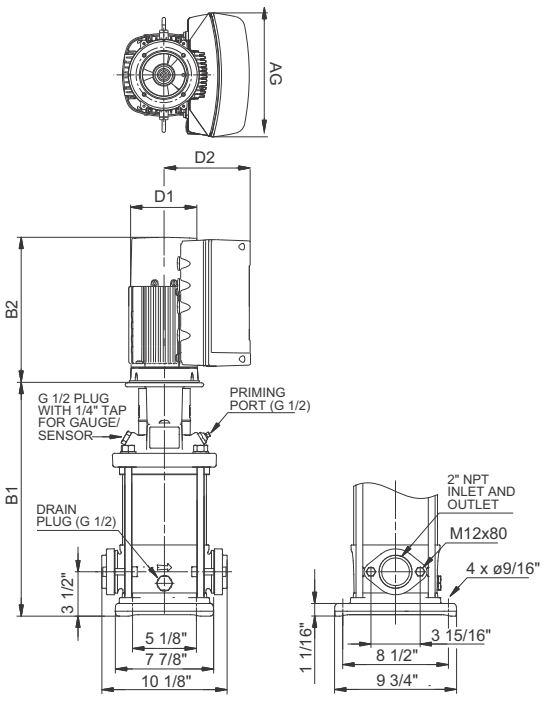

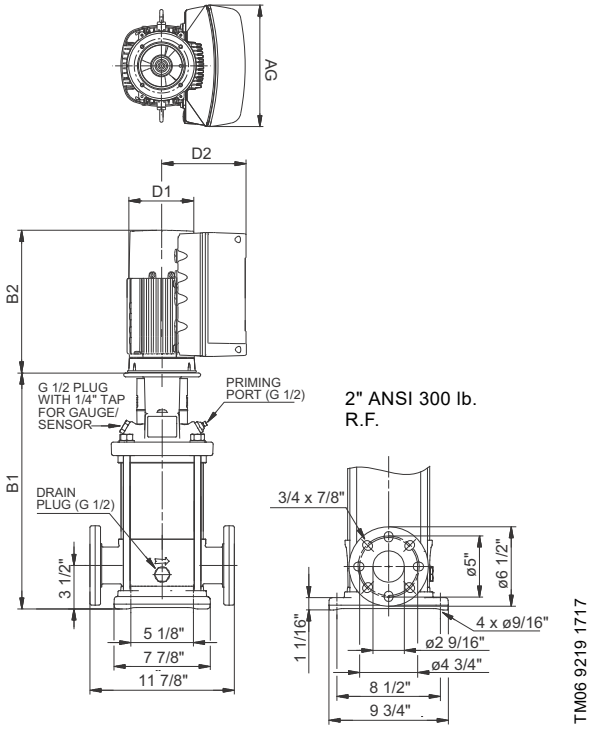

Pump type	[HP (kW)]	PH	Voltage [V]	NEMA frame size	PEI_{VL}	Impeller diameter [in (mm)]	Oval[1]	ANSI B1 [in (mm)]	MLE D1 [in (mm)]	MLE D2 [in (mm)]	AG [in (mm)]	ANSI MLE B1+B2 [in (mm)]	ANSI ship wt. [lbs (kg)]
CRIE 20-1	3 (2.2)	3	200-240	182TC	0.42	4.13 (104.80)	*	17.13 (435)	7.53 (191)	7.91 (201)	11.46 (291)	30.28 (769)	144 (65)
		3	440-480	182TC	0.41	4.13 (104.80)	*	17.13 (435)	4.80 (122)	6.22 (158)	10.56 (268)	27.96 (710)	135 (61)
CRIE 20-2	5 (4)	3	200-240	182TC	0.42	4.13 (104.80)	*	17.13 (435)	7.53 (191)	7.91 (201)	11.46 (291)	30.28 (769)	150 (68)
		3	440-480	182TC	0.41	4.13 (104.80)	*	17.13 (435)	7.53 (191)	7.91 (201)	11.46 (291)	30.28 (769)	161 (73)
CRIE 20-3	7.5 (5.5)	3	200-240	213TC	0.42	4.13 (104.80)	*	19.21 (488)	10.04 (255)	9.33 (237)	13.62 (346)	34.52 (877)	200 (91)
		3	440-480	213TC	0.41	4.13 (104.80)	*	19.21 (488)	7.53 (191)	7.91 (201)	11.46 (291)	33.58 (853)	191 (87)
CRIE 20-4	10 (7.5)	3	440-480	213TC	0.41	4.13 (104.80)	*	20.98 (533)	10.04 (255)	9.33 (237)	13.62 (346)	36.29 (922)	225 (102)
CRIE 20-5	15 (11)	3	440-480	254TC	0.41	4.13 (104.80)	*	25.28 (642)	10.04 (255)	9.33 (237)	13.62 (346)	41.26 (1048)	332 (151)
CRIE 20-6	15 (11)	3	440-480	254TC	0.41	4.13 (104.80)	-	27.05 (687)	10.04 (255)	9.33 (237)	13.62 (346)	43.03 (1093)	337 (153)
CRIE 20-8	20 (15)	3	460-480	256TC	0.46	4.13 (104.80)	-	30.59 (777)	13.54 (344)	12.13 (308)	16.54 (420)	49.80 (1265)	500 (227)
CRIE 20-10	25 (18.5)	3	460-480	284TSC	0.46	4.13 (104.80)	-	33.50 (851)	13.54 (344)	12.13 (308)	16.54 (420)	56.65 (1439)	536 (243)

All dimensions in inches unless otherwise noted.

1 For oval flanged pumps, the B1 and B1+B2 dimensions are one inch less than for ANSI flanged pumps, and the weight is approximately 7 lb (3 kg) less.

* Available.

CRNE 20 dimensional data

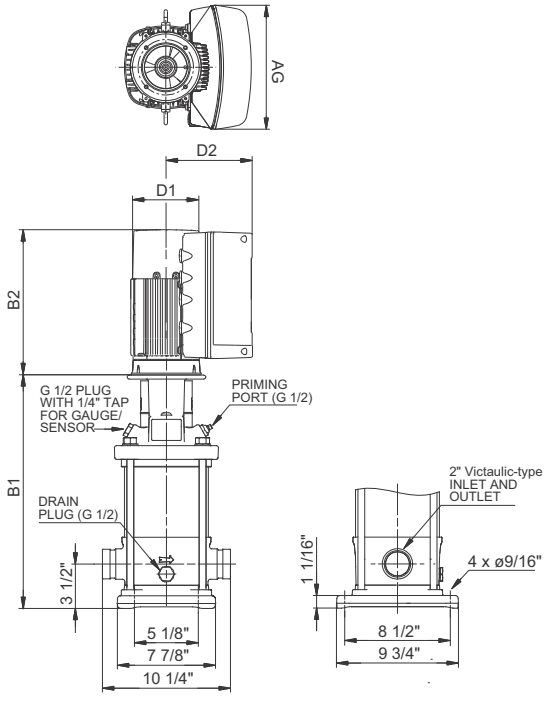

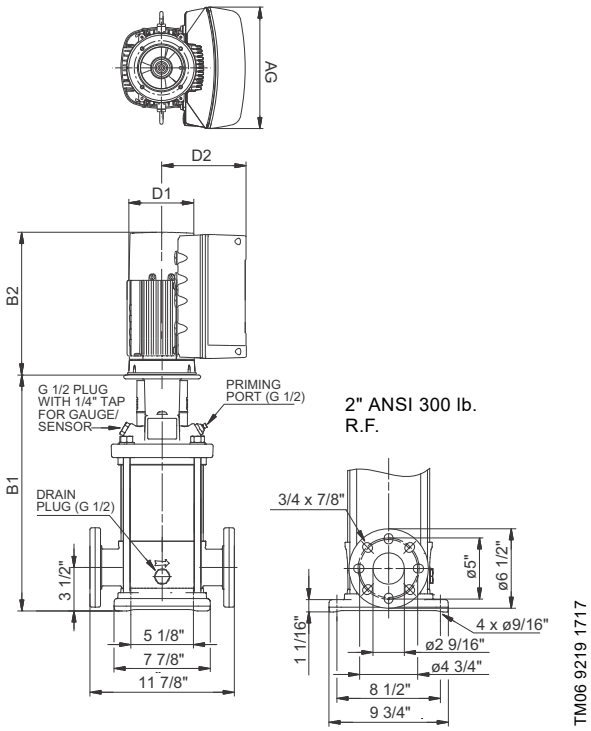

Pump type	[HP (kW)]	PH	Voltage [V]	NEMA frame Size	PEI_{VL}	Impeller diameter [in (mm)]	PJE[1]	ANSI B1 [in (mm)]	MLE D1 [in (mm)]	MLE D2 [in (mm)]	AG [in (mm)]	ANSI MLE B1+B2 [in (mm)]	ANSI ship wt. [lbs (kg)]
CRNE 20-1	3 (2.2)	3	200-240	182TC	0.42	4.13 (104.80)	*	17.13 (435)	7.53 (192)	7.91 (201)	11.46 (291)	30.28 (769)	144 (65)
		3	440-480	182TC	0.41	4.13 (104.80)	*	17.13 (435)	4.80 (122)	6.22 (158)	10.56 (268)	27.96 (710)	135 (61)
CRNE 20-2	5 (4)	3	200-240	182TC	0.42	4.13 (104.80)	*	17.13 (435)	7.53 (192)	7.91 (201)	11.46 (291)	30.28 (769)	150 (68)
		3	440-480	182TC	0.41	4.13 (104.80)	*	17.13 (435)	7.53 (192)	7.91 (201)	11.46 (291)	30.28 (769)	161 (73)
CRNE 20-3	7.5 (5.5)	3	200-240	213TC	0.42	4.13 (104.80)	*	19.21 (488)	10.04 (255)	9.33 (237)	13.62 (346)	34.52 (877)	200 (91)
		3	440-480	213TC	0.41	4.13 (104.80)	*	19.21 (488)	7.53 (192)	7.91 (201)	11.46 (291)	33.58 (853)	191 (87)
CRNE 20-4	10 (7.5)	3	440-480	213TC	0.41	4.13 (104.80)	*	20.98 (533)	10.04 (255)	9.33 (237)	13.62 (346)	36.29 (922)	225 (102)
CRNE 20-5	15 (11)	3	440-480	254TC	0.41	4.13 (104.80)	*	25.28 (642)	10.04 (255)	9.33 (237)	13.62 (346)	41.26 (1048)	332 (151)
CRNE 20-6	15 (11)	3	440-480	254TC	0.41	4.13 (104.80)	*	27.05 (687)	10.04 (255)	9.33 (237)	13.62 (346)	43.03 (1093)	337 (153)
CRNE 20-8	20 (15)	3	460-480	256TC	0.46	4.13 (104.80)	*	30.59 (777)	13.54 (344)	12.13 (308)	16.54 (420)	49.80 (1265)	500 (227)
CRNE 20-10	25 (18.5)	3	460-480	284TSC	0.46	4.13 (104.80)	*	33.50 (851)	13.54 (344)	12.13 (308)	16.54 (420)	56.65 (1439)	536 (243)

All dimensions in inches unless otherwise noted.

1 For oval flanged pumps, the B1 and B1+B2 dimensions are one inch less than for ANSI flanged pumps, and the weight is approximately 9 lb (4 kg) less.

* Available.

CRE, CRNE 32

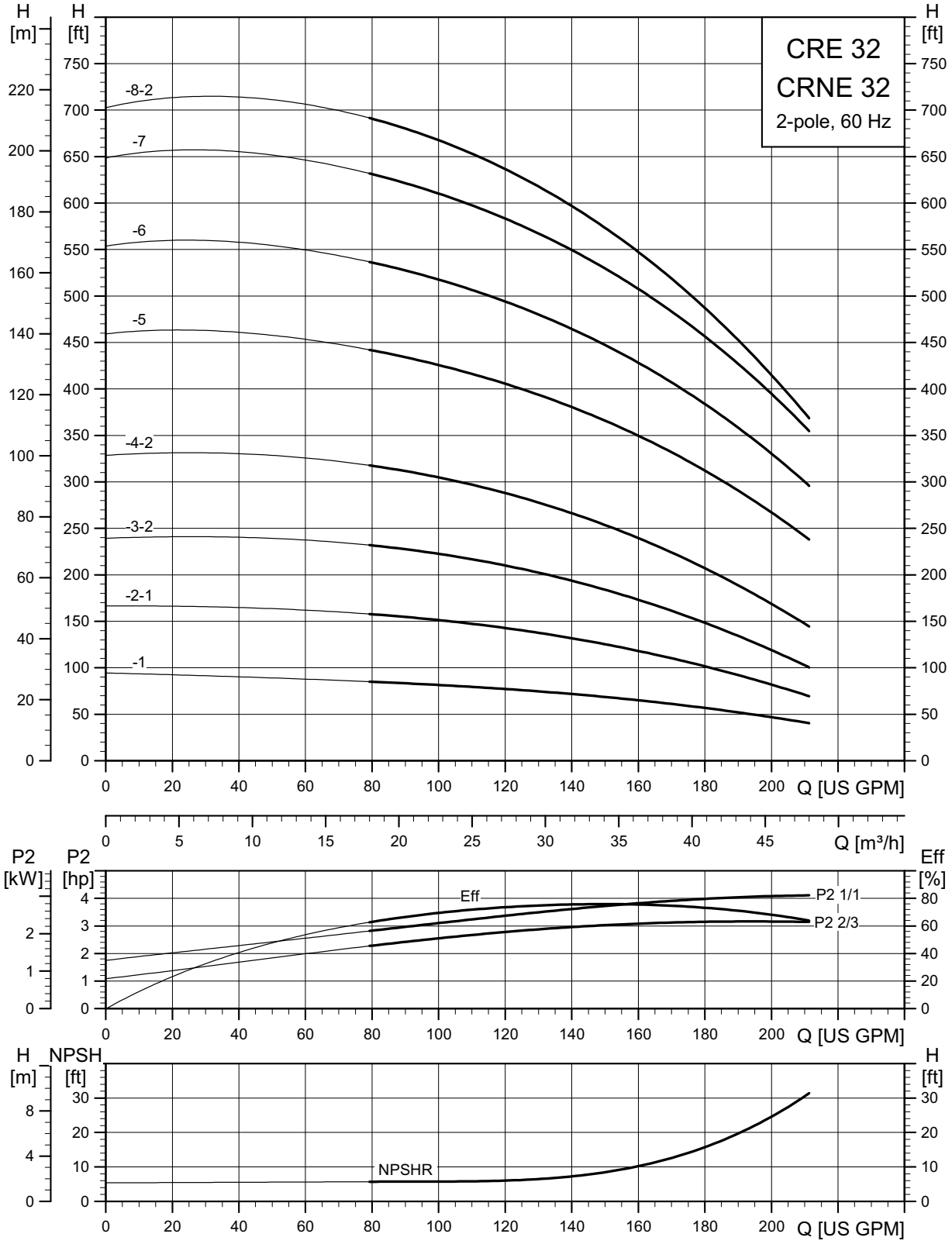
CRE 32
CRNE 32
2-pole, 60 Hz
H [m]
H [ft]
-8-2
-7
-6
-5
-4-2
-3-2
-2-1
-1
Q [US GPM]
Q [m³/h]
P2 [kW]
P2 [hp]
Eff [%]
Eff
P2 1/1
P2 2/3
H [m]
NPSH [ft]
NPSHR
TM05 9418 4619

CRE 32 dimensional data

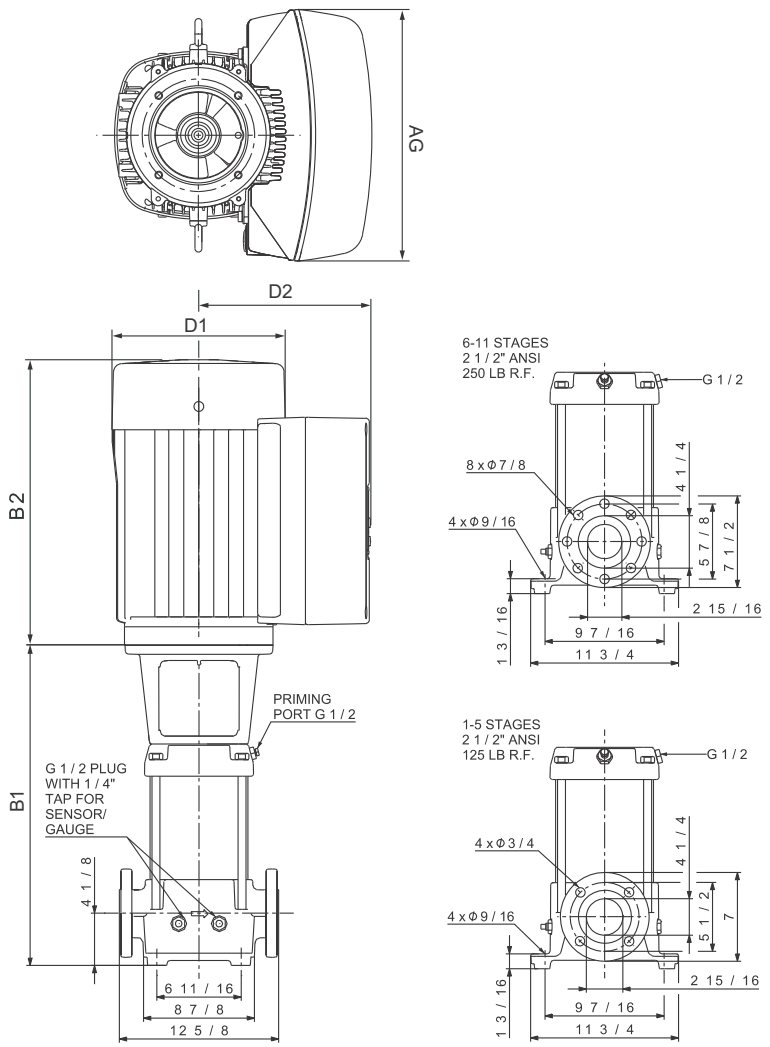

Pump type	[HP (kW)]	PH	Voltage [V]	NEMA frame size	PEI_{vL}	Impeller diameter [in (mm)]	ANSI B1 [in (mm)]	MLE D1 [in (mm)]	MLE D2 [in (mm)]	AG [in (mm)]	ANSI MLE B1+B2 [in (mm)]	ANSI ship wt. [lbs (kg)]
CRE 32-1	5 (4)	3	200-240	182TC	0.41	4.66 (118.40)	19.88 (505)	7.53 (193)	7.91 (201)	11.46 (291)	33.03 (839)	169 (77)
		3	440-480	182TC	0.40	4.66 (118.40)	19.88 (505)	7.53 (193)	7.91 (201)	11.46 (291)	33.03 (839)	180 (82)
CRE 32-2-1	7.5 (5.5)	3	200-240	213TC	0.41	4.66 (118.40)	22.64 (575)	10.04 (255)	9.33 (237)	13.62 (346)	37.95 (964)	214 (97)
		3	440-480	213TC	0.40	4.66 (118.40)	22.64 (575)	7.53 (193)	7.91 (201)	11.46 (291)	37.01 (940)	205 (93)
CRE 32-3-2	10 (7.5)	3	440-480	213TC	0.40	4.66 (118.40)	25.39 (645)	10.04 (255)	9.33 (237)	13.62 (346)	40.70 (1034)	240 (109)
CRE 32-4-2	15 (11)	3	440-480	254TC	0.40	4.66 (118.40)	32.48 (825)	10.04 (255)	9.33 (237)	13.62 (346)	48.46 (1231)	393 (178)
CRE 32-5	20 (15)	3	460-480	256TC	0.44	4.66 (118.40)	35.24 (895)	13.54 (344)	12.13 (308)	16.54 (420)	54.45 (1383)	551 (250)
CRE 32-6	25 (18.5)	3	460-480	284TSC	0.44	4.66 (118.40)	37.99 (965)	13.54 (344)	12.13 (308)	16.54 (420)	61.14 (1553)	623 (283)
CRE 32-7	30 (22)	3	460-480	284TSC	0.44	4.66 (118.40)	40.75 (1035)	13.54 (344)	12.13 (308)	16.54 (420)	63.90 (1623)	657 (298)
CRE 32-8-2	30 (22)	3	460-480	284TSC	0.44	4.66 (118.40)	43.50 (1105)	13.54 (344)	12.13 (308)	16.54 (420)	66.65 (1693)	669 (303)

All dimensions in inches unless otherwise noted.

CRNE 32 dimensional data

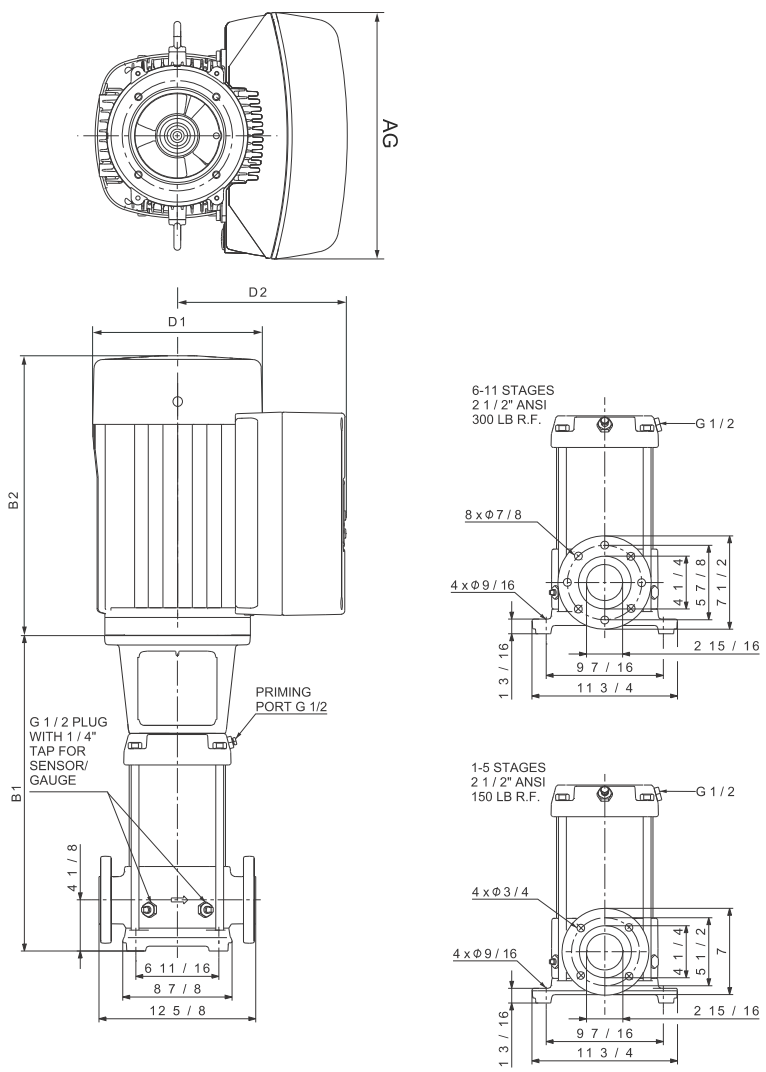

Pump type	[HP (kW)]	Ph	Voltage [V]	NEMA frame size	PEI_{VL}	Impeller diameter [in (mm)]	ANSI B1 [in (mm)]	MLE D1 [in (mm)]	MLE D2 [in (mm)]	AG [in (mm)]	ANSI MLE B1+B2 [in (mm)]	ANSI ship wt. [lbs (kg)]
CRNE 32-1	5 (4)	3	200-240	182TC	0.41	4.66 (118.40)	19.88 (505)	7.53 (191)	7.91 (201)	11.46 (291)	33.03 (839)	174 (79)
		3	440-480	182TC	0.40	4.66 (118.40)	19.88 (505)	7.53 (191)	7.91 (201)	11.46 (291)	33.03 (839)	185 (84)
CRNE 32-2-1	7.5 (5.5)	3	200-240	213TC	0.41	4.66 (118.40)	22.64 (575)	10.04 (255)	9.33 (237)	13.62 (346)	37.95 (964)	219 (99)
		3	440-480	213TC	0.40	4.66 (118.40)	22.64 (575)	7.53 (191)	7.91 (201)	11.46 (291)	37.01 (940)	211 (96)
CRNE 32-3-2	10 (7.5)	3	440-480	213TC	0.40	4.66 (118.40)	25.39 (645)	10.04 (255)	9.33 (237)	13.62 (346)	40.70 (1034)	245 (111)
CRNE 32-4-2	15 (11)	3	440-480	254TC	0.40	4.66 (118.40)	32.48 (825)	10.04 (255)	9.33 (237)	13.62 (346)	48.46 (1231)	398 (181)
CRNE 32-5	20 (15)	3	460-480	256TC	0.44	4.66 (118.40)	35.24 (895)	13.54 (344)	12.13 (308)	16.54 (420)	54.45 (1383)	556 (252)
CRNE 32-6	25 (18.5)	3	460-480	284TSC	0.44	4.66 (118.40)	37.99 (965)	13.54 (344)	12.13 (308)	16.54 (420)	61.14 (1553)	627 (284)
CRNE 32-7	30 (22)	3	460-480	286TSC	0.44	4.66 (118.40)	40.75 (1035)	13.54 (344)	12.13 (308)	16.54 (420)	63.90 (1623)	660 (299)
CRNE 32-8-2	30 (22)	3	460-480	286TSC	0.44	4.66 (118.40)	43.50 (1105)	13.54 (344)	12.13 (308)	16.54 (420)	66.69 (1683)	673 (305)

All dimensions in inches unless otherwise noted.

CRE, CRNE 45

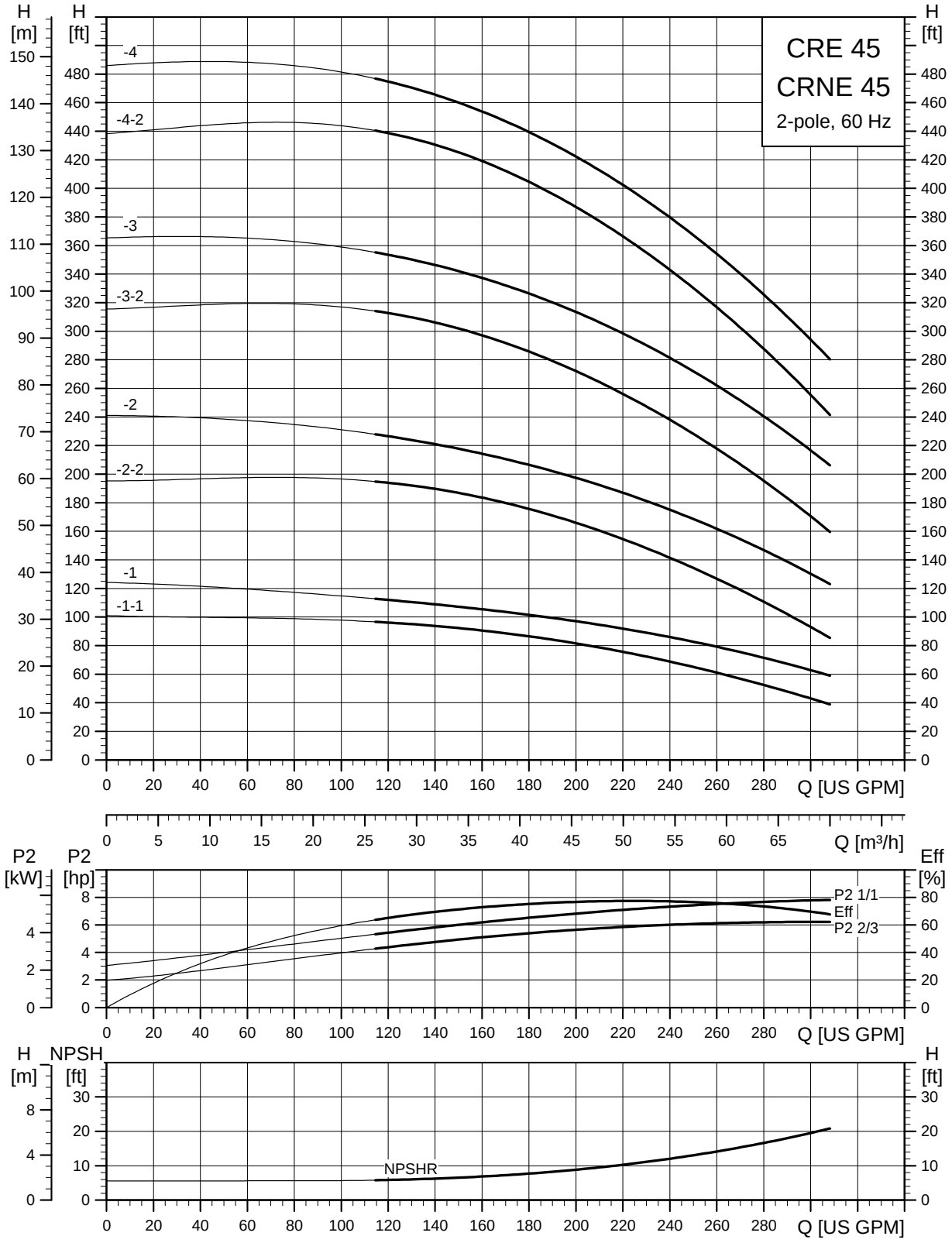
CRE 45
CRNE 45
2-pole, 60 Hz
H [m]
H [ft]
-4
-4-2
-3
-3-2
-2
-2-2
-1
-1-1
Q [US GPM]
Q [m³/h]
P2 [kW]
P2 [hp]
Eff [%]
P2 1/1
Eff
P2 2/3
H [m]
NPSH [ft]
NPSHR
TM05 9423 3813

CRE 45 dimensional data

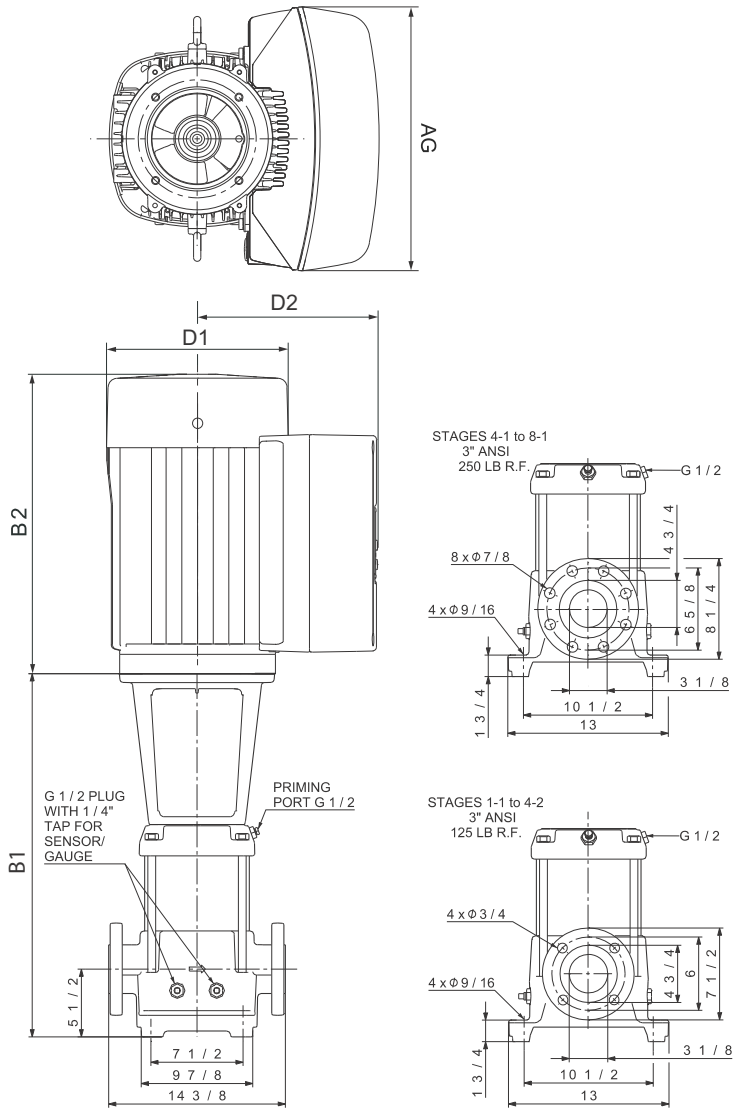

TM06 9240 2017

Pump type	[HP (kW)]	P69	Voltage [V]	NEMA frame size	PEI_{vL}	Impeller diameter [in (mm)]	ANSI B1 [in (mm)]	MLE D1 [in (mm)]	MLE D2 [in (mm)]	AG [in (mm)]	ANSI MLE B1+B2 [in (mm)]	ANSI ship wt. [lbs (kg)]
CRE 45-1-1	7.5 (5.5)	3	200-240	213TC	0.41	5.34 (136)	22.01 (559)	10.04 (255)	9.33 (237)	13.62 (346)	37.32 (948)	321 (146)
		3	440-480	213TC	0.40	5.34 (136)	22.01 (559)	7.53 (191)	7.91 (201)	11.46 (291)	36.38 (924)	313 (142)
CRE 45-1	10 (7.5)	3	440-480	213TC	0.40	5.34 (136)	22.01 (559)	10.04 (255)	9.33 (237)	13.62 (346)	37.32 (948)	337 (153)
CRE 45-2-2	15 (11)	3	440-480	254TC	0.40	5.34 (136)	29.49 (749)	10.04 (255)	9.33 (237)	13.62 (346)	45.47 (1155)	402 (182)
CRE 45-2	15 (11)	3	440-480	254TC	0.40	5.34 (136)	29.49 (749)	10.04 (255)	9.33 (237)	13.62 (346)	45.47 (1155)	402 (182)
CRE 45-3-2	20 (15)	3	460-480	256TC	0.46	5.34 (136)	32.64 (829)	13.54 (344)	12.13 (308)	16.54 (346)	51.85 (1317)	561 (254)
CRE 45-3	25 (18.5)	3	460-480	284TSC	0.46	5.34 (136)	32.64 (829)	13.54 (344)	12.13 (308)	16.54 (420)	55.79 (1417)	588 (267)
CRE 45-4-2	30 (22)	3	460-480	286TSC	0.46	5.34 (136)	35.79 (909)	13.54 (344)	12.13 (308)	16.54 (420)	58.94 (1497)	660 (299)
CRE 45-4	30 (22)	3	460-480	286TSC	0.46	5.34 (136)	35.79 (909)	13.54 (344)	12.13 (308)	16.54 (420)	58.94 (1497)	665 (302)

All dimensions in inches unless otherwise noted.

CRNE 45 dimensional data

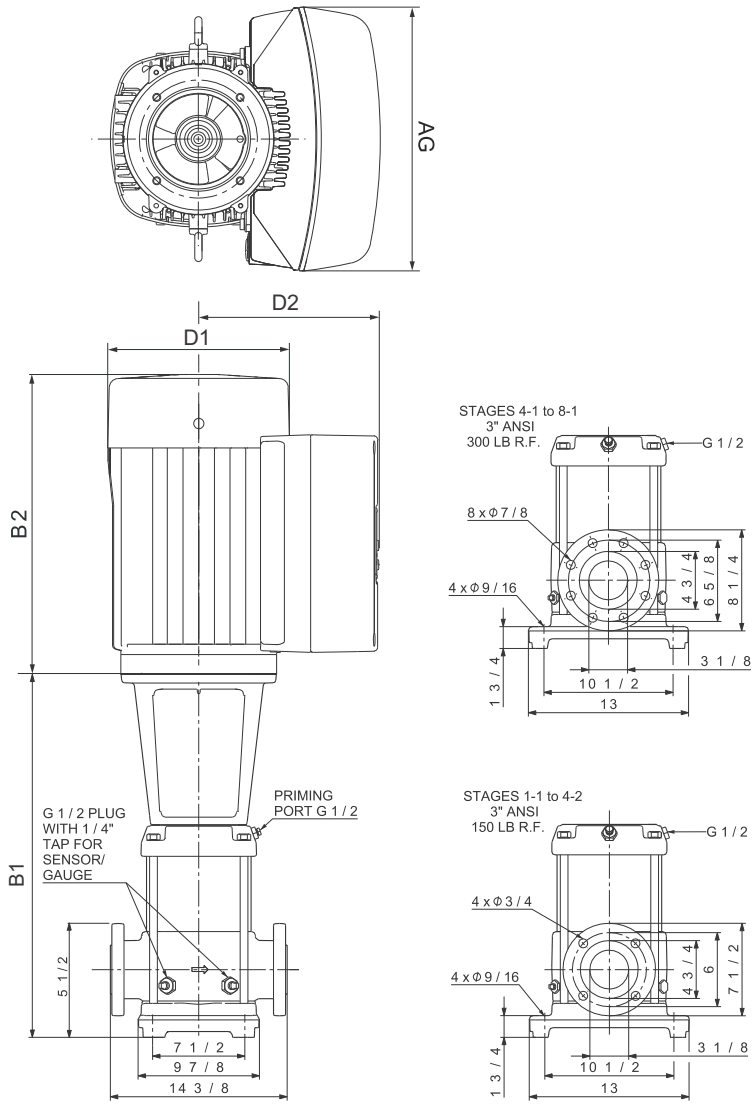

Pump type	[HP (kW)]	PH	Voltage [V]	NEMA frame size	PEI_{VL}	Impeller diameter [in (mm)]	ANSI B1 [in (mm)]	MLE D1 [in (mm)]	MLE D2 [in (mm)]	AG [in (mm)]	ANSI MLE B1+B2 [in (mm)]	ANSI ship wt. [lbs (kg)]
CRNE 45-1-1	7.5 (5.5)	3	200-240	213TC	0.41	5.34 (136)	22.01 (559)	10.04 (255)	9.33 (237)	13.62 (346)	37.32 (948)	322 (146)
		3	440-480	213TC	0.40	5.34 (136)	22.01 (559)	7.53 (191)	7.91 (201)	11.46 (291)	36.38 (924)	313 (142)
CRNE 45-1	10 (7.5)	3	440-480	213TC	0.40	5.34 (136)	22.01 (559)	10.04 (255)	9.33 (237)	13.62 (346)	37.32 (948)	337 (153)
CRNE 45-2-2	15 (11)	3	440-480	254TC	0.40	5.34 (136)	29.49 (749)	10.04 (255)	9.33 (237)	13.62 (346)	45.47 (1155)	402 (182)
CRNE 45-2	15 (11)	3	440-480	254TC	0.40	5.34 (136)	29.49 (749)	10.04 (255)	9.33 (237)	13.62 (346)	45.47 (1155)	402 (182)
CRNE 45-3-2	20 (15)	3	460-480	256TC	0.46	5.34 (136)	32.64 (829)	13.54 (344)	12.13 (308)	16.54 (420)	51.85 (1317)	562 (255)
CRNE 45-3	25 (18.5)	3	460-480	284TSC	0.46	5.34 (136)	32.64 (829)	13.54 (344)	12.13 (308)	16.54 (420)	55.79 (1417)	588 (267)
CRNE 45-4-2	30 (22)	3	460-480	286TSC	0.46	5.34 (136)	35.79 (909)	13.54 (344)	12.13 (308)	16.54 (420)	58.94 (1497)	660 (299)
CRNE 45-4	30 (22)	3	460-480	286TSC	0.46	5.34 (136)	35.79 (909)	13.54 (344)	12.13 (308)	16.54 (420)	58.94 (1497)	664 (301)

All dimensions in inches unless otherwise noted.

CRE, CRNE 64

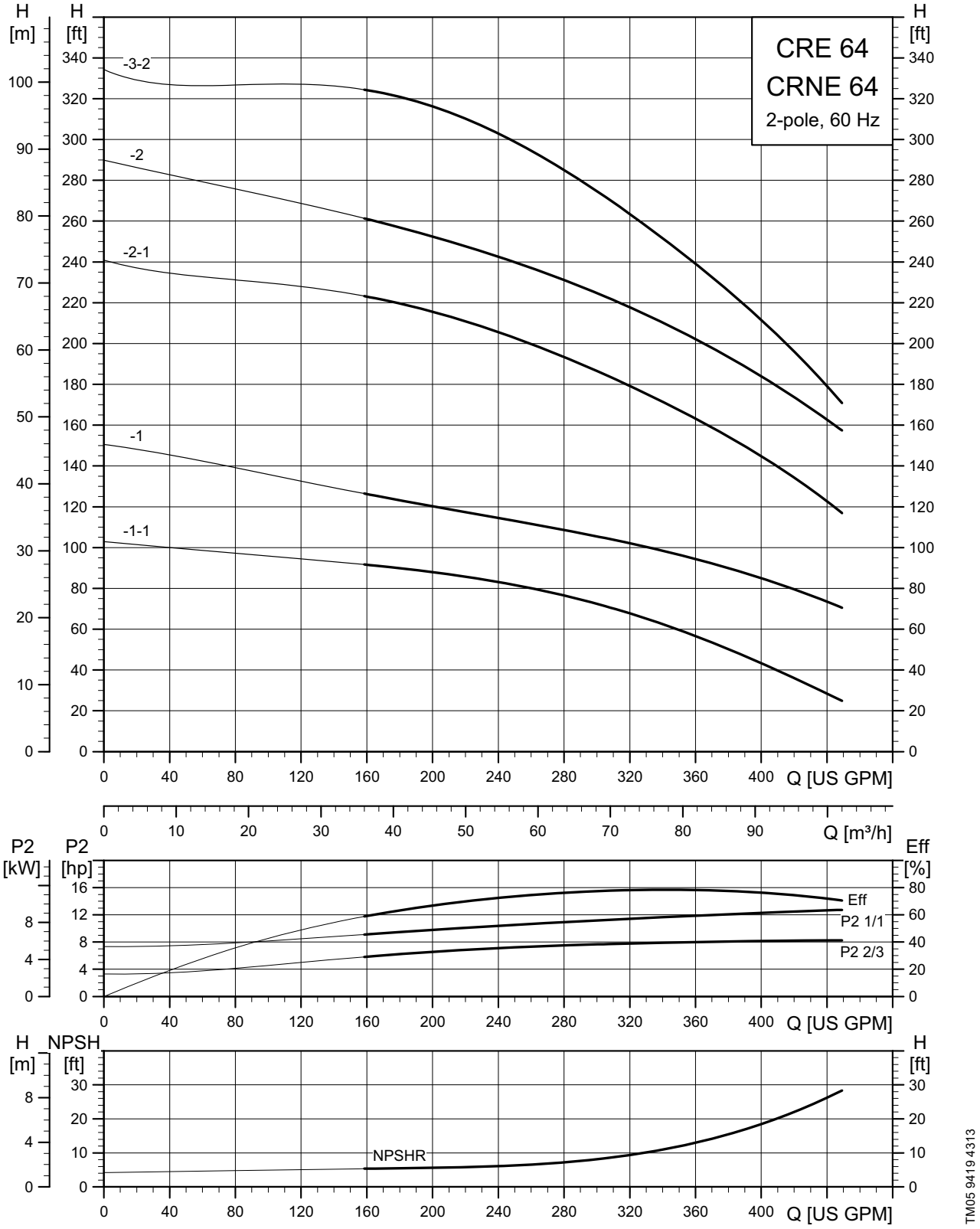
CRE 64
CRNE 64
2-pole, 60 Hz
H [m]
H [ft]
-3-2
-2
-2-1
-1
-1-1
Q [US GPM]
Q [m³/h]
P2 [kW]
P2 [hp]
Eff [%]
Eff
P2 1/1
P2 2/3
H [m]
NPSH [ft]
NPSHR
TM05 9419 4313

CRE 64 dimensional data

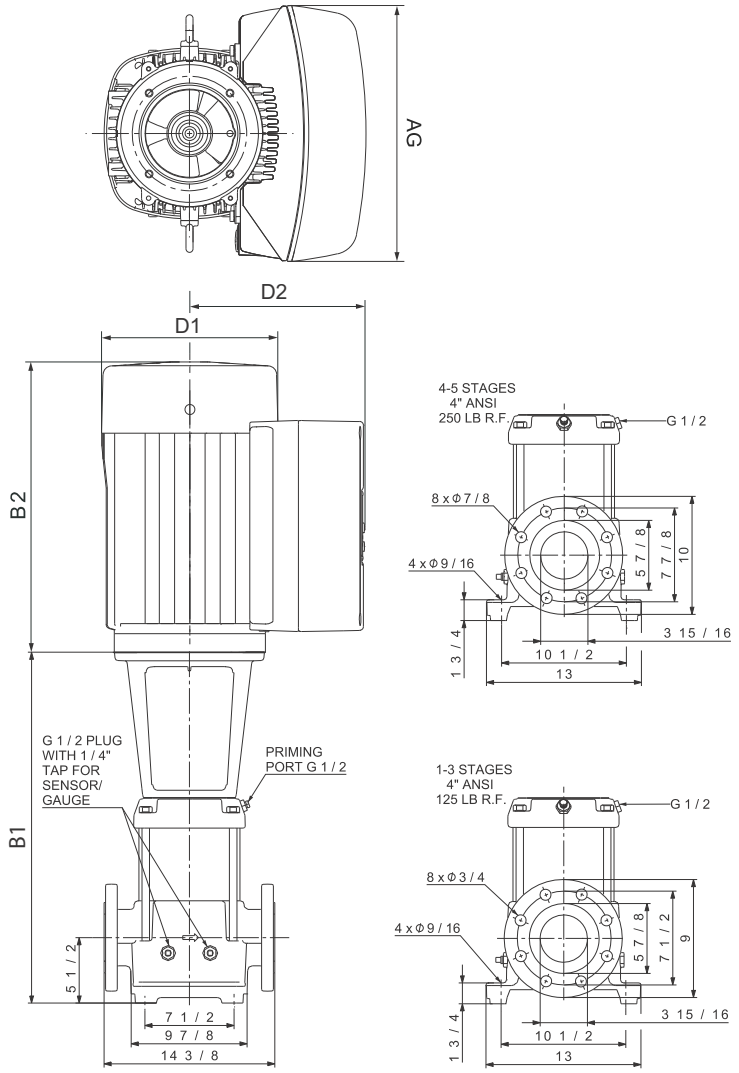

TM06 9241 2017

Pump type	[HP (kW)]	Ph	Voltage [V]	NEMA frame size	PEI_{vL}	Impeller diameter [in (mm)]	ANSI B1 [in (mm)]	MLE D1 [in (mm)]	MLE D2 [in (mm)]	AG [in (mm)]	ANSI MLE B1+B2 [in (mm)]	ANSI ship wt. [lbs (kg)]
CRE 64-1-1	10 (7.5)	3	440-480	213TC	0.43	5.59 (142)	22.09 (561)	10.04 (255)	9.33 (237)	13.62 (346)	37.40 (950)	346 (157)
CRE 64-1	15 (11)	3	440-480	254TC	0.43	5.59 (142)	26.42 (671)	10.04 (255)	9.33 (237)	13.62 (346)	42.40 (1077)	386 (175)
CRE 64-2-1	20 (15)	3	460-480	256TC	0.46	5.59 (142)	29.69 (754)	13.54 (344)	12.13 (308)	16.54 (420)	48.90 (1242)	564 (256)
CRE 64-2	25 (18.5)	3	460-480	284TSC	0.46	5.59 (142)	29.69 (754)	13.54 (344)	12.13 (308)	16.54 (420)	52.83 (1342)	592 (269)
CRE 64-3-2	30 (22)	3	460-480	286TSC	0.46	5.59 (142)	32.91 (836)	13.54 (344)	12.13 (308)	16.54 (420)	56.06 (1424)	664 (301)

All dimensions in inches unless otherwise noted.

CRNE 64 dimensional data

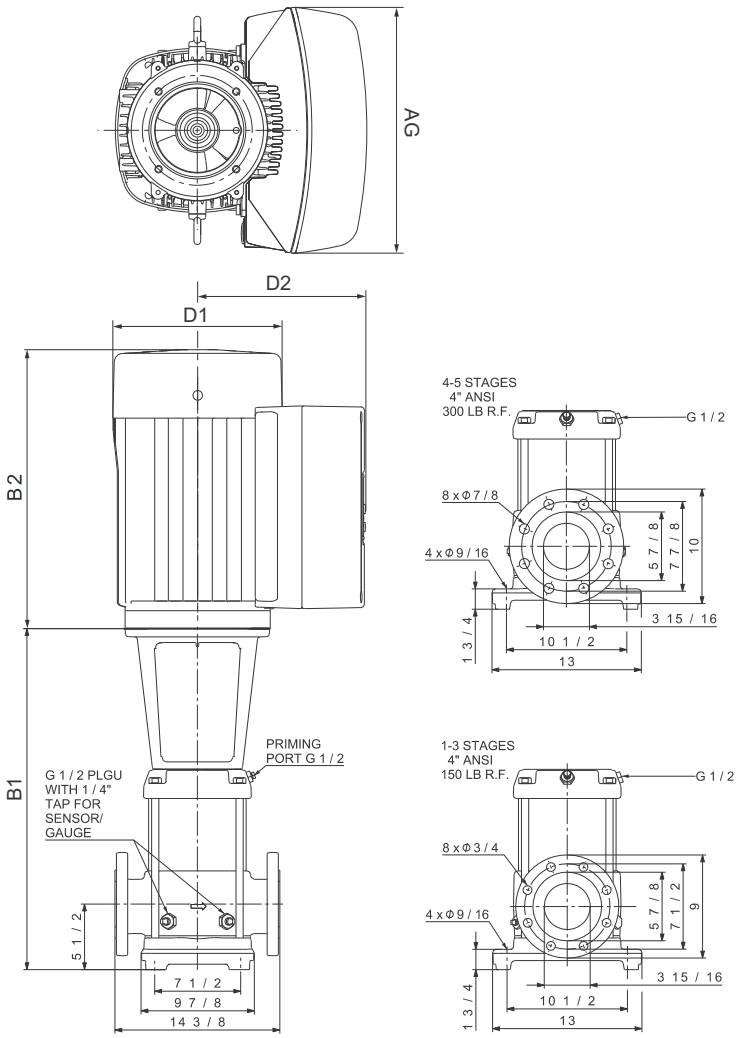

Pump type	[HP (kW)]	PH	Voltage [V]	NEMA frame size	PEI_{VL}	Impeller diameter [in (mm)]	ANSI B1 [in (mm)]	MLE D1 [in (mm)]	MLE D2 [in (mm)]	AG [in (mm)]	ANSI MLE B1+B2 [in (mm)]	ANSI ship wt. [lbs (kg)]
CRNE 64-1-1	10 (7.5)	3	440-480	213TC	0.43	5.59 (142)	22.09 (561)	10.04 (255)	9.33 (237)	13.62 (346)	37.40 (950)	347 (157)
CRNE 64-1	15 (11)	3	440-480	254TC	0.43	5.59 (142)	26.42 (671)	10.04 (255)	9.33 (237)	13.62 (346)	42.40 (1077)	387 (176)
CRNE 64-2-1	20 (15)	3	460-480	256TC	0.46	5.59 (142)	29.69 (754)	13.54 (344)	12.13 (308)	16.54 (420)	48.90 (1242)	565 (256)
CRNE 64-2	25 (18.5)	3	460-480	284TSC	0.46	5.59 (142)	29.69 (754)	13.54 (344)	12.13 (308)	16.54 (420)	52.83 (1342)	594 (269)
CRNE 64-3-2	30 (22)	3	460-480	286TSC	0.46	5.59 (142)	32.91 (836)	13.54 (344)	12.13 (308)	16.54 (420)	56.06 (1424)	665 (302)

All dimensions in inches unless otherwise noted.

CRE 95

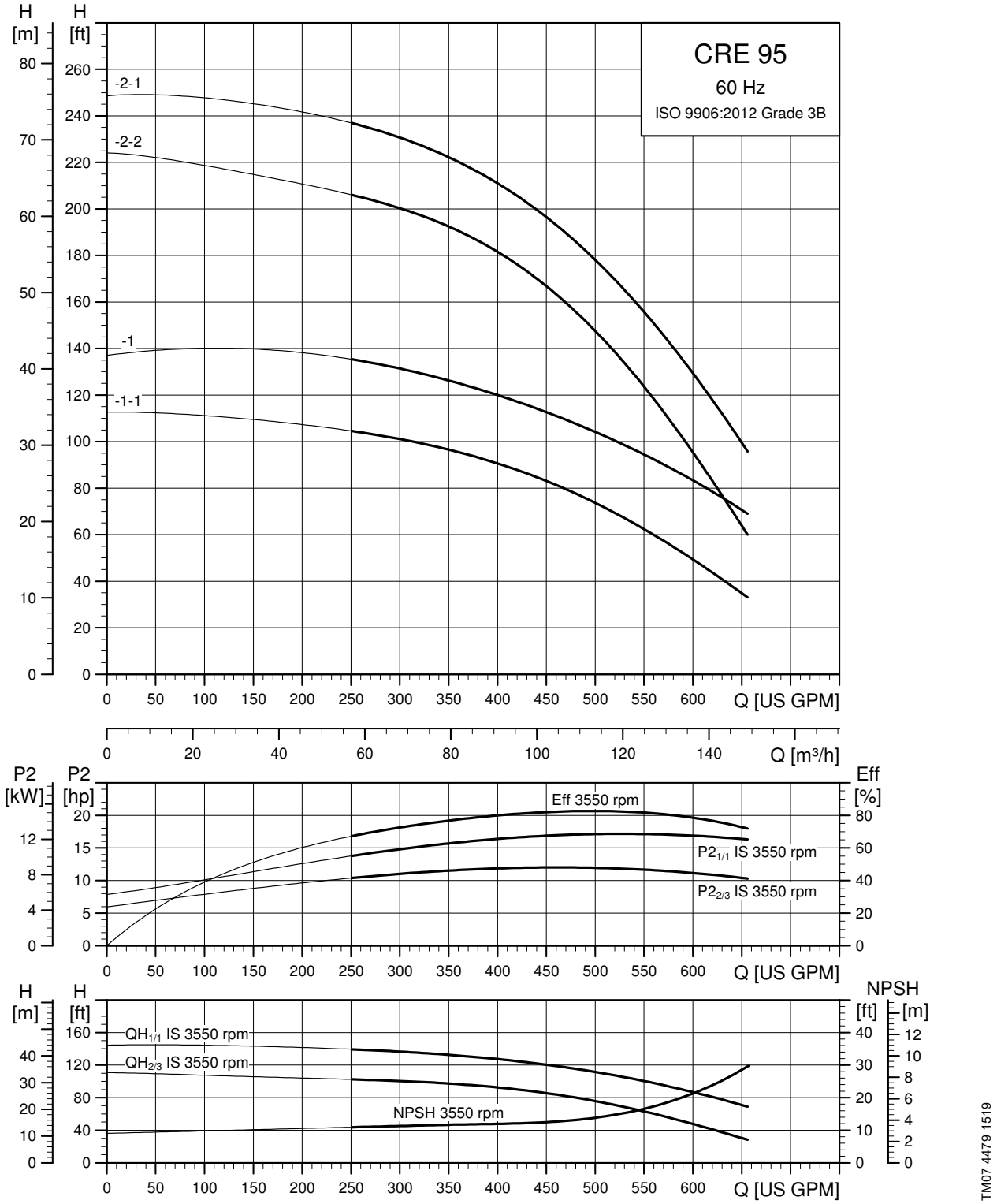

The maximum pump efficiency (Eff) is based on a three-stage pump.

CRE 95 dimensional data

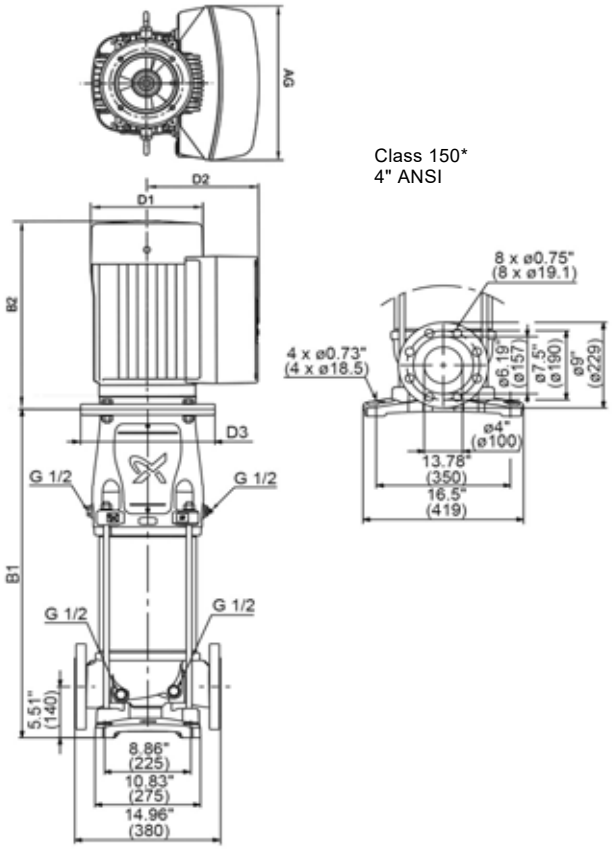

TM07 4464 1719

* CRE, CRNE 95 pumps with one to two stages (with one reduced diameter impeller) are fitted with 150 lb (68 kg) flanges as standard.

Pump type	[HP (kW)]	PH	Voltage [V]	NEMA frame size	PEI_{VL}	Impeller diameter [in (mm)]	ANSI B1 [in (mm)]	MLE D1 [in (mm)]	MLE D2 [in (mm)]	AG [in (mm)]	ANSI MLE B1+B2 [in (mm)]	ANSI ship wt. [lbs (kg)]
CRE 95-1-1	15 (11)	3	440-480	254TC	0.42	6.07 (154)	27.40 (696)	10.04 (255)	9.33 (237)	13.62 (346)	43.38 (1102)	632 (287)
CRE 95-1	20 (15)	3	460-480	256TC	0.45	6.07 (154)	27.40 (696)	13.54 (344)	12.13 (308)	16.54 (420)	46.61 (1184)	782 (355)
CRE 95-2-2	25 (18.5)	3	460-480	284TSC	0.45	6.07 (154)	31.50 (800)	13.54 (344)	12.13 (308)	16.54 (420)	54.65 (1388	823 (373)
CRE 95-2-1	30 (22)	3	460-480	286TSC	0.45	6.07 (154)	31.50 (800)	13.54 (344)	12.13 (308)	16.54 (420)	54.65 (1388	849 (385)

CRNE 95

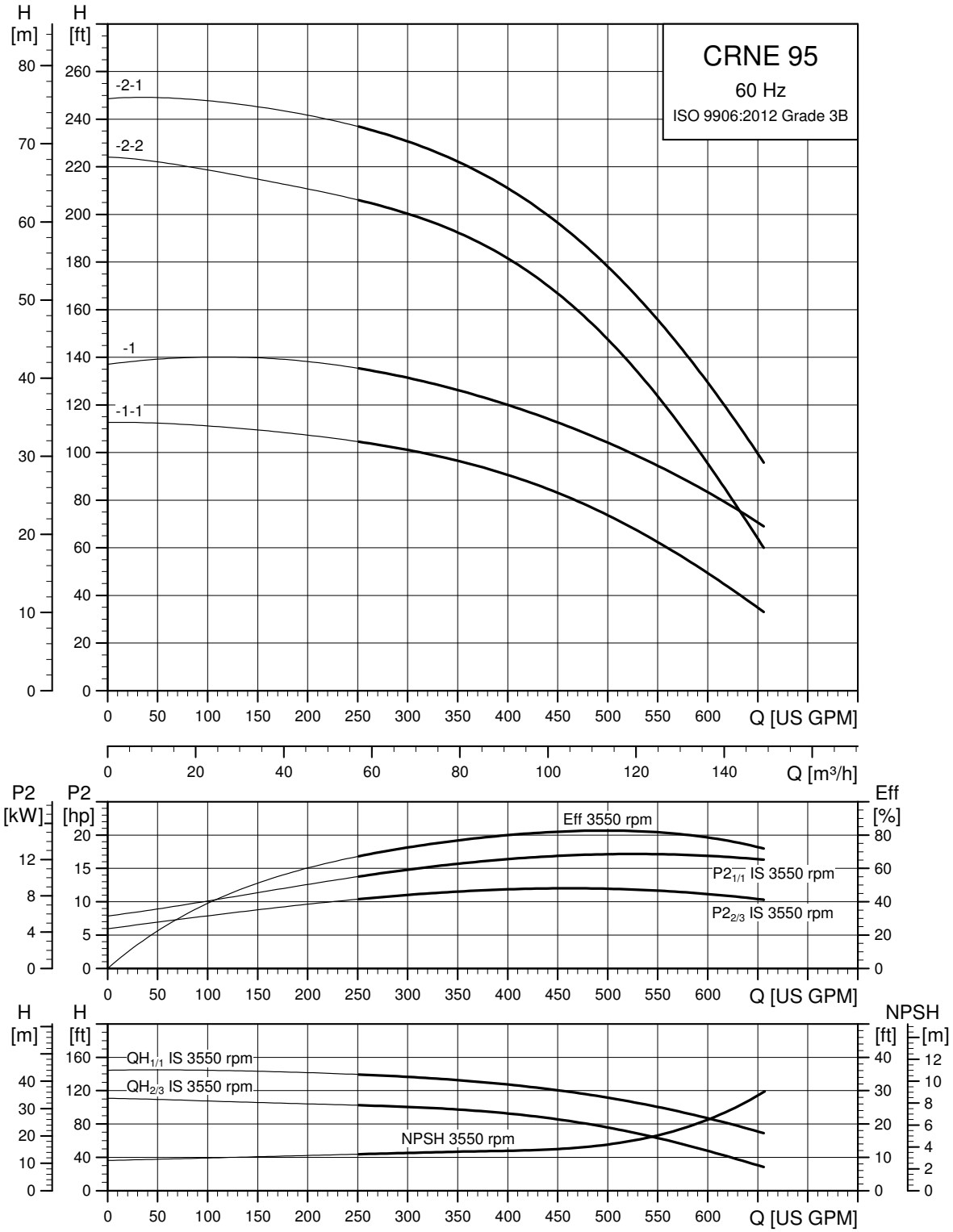

TM07 4478 1519

The maximum pump efficiency (Eff) is based on a three-stage pump.

CRNE 95 dimensional data

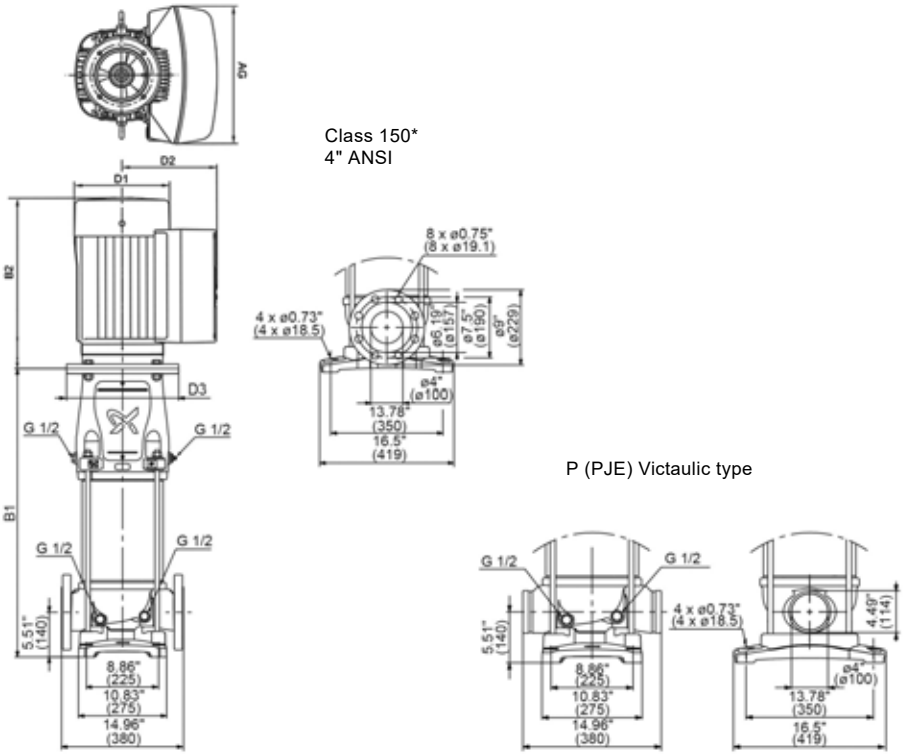

* CRE, CRNE 95 pumps with one to two stages (with one reduced diameter impeller) are fitted with 150 lb (68 kg) flanges as standard.

Pump type	[HP (kw)]	PH	Voltage [V]	NEMA frame size	PEI_{VL}	Impeller diameter [in (mm)]	ANSI B1 [in (mm)]	MLE D1 [in (mm)]	MLE D2 [in (mm)]	AG [in (mm)]	ANSI MLE B1+B2 [in (mm)]	ANSI ship wt. [lbs (kg)]
CRNE 95-1-1	15 (11)	3	440-480	254TC	0.42	6.07 (154)	27.40 (696)	10.04 (255)	9.33 (237)	13.62 (346)	43.38 (1102)	616 (279)
CRNE 95-1	20 (15)	3	460-480	256TC	0.45	6.07 (154)	27.40 (696)	13.54 (344)	12.13 (308)	16.54 (420)	46.61 (1184)	766 (347)
CRNE 95-2-2	25 (18.5)	3	460-480	284TSC	0.45	6.07 (154)	31.50 (800)	13.54 (344)	12.13 (308)	16.54 (420)	54.65 (1388)	806 (366)
CRNE 95-2-1	30 (22)	3	460-480	286TSC	0.45	6.07 (154)	31.50 (800)	13.54 (344)	12.13 (308)	16.54 (420)	54.65 (1388)	832 (377)

CRE 125

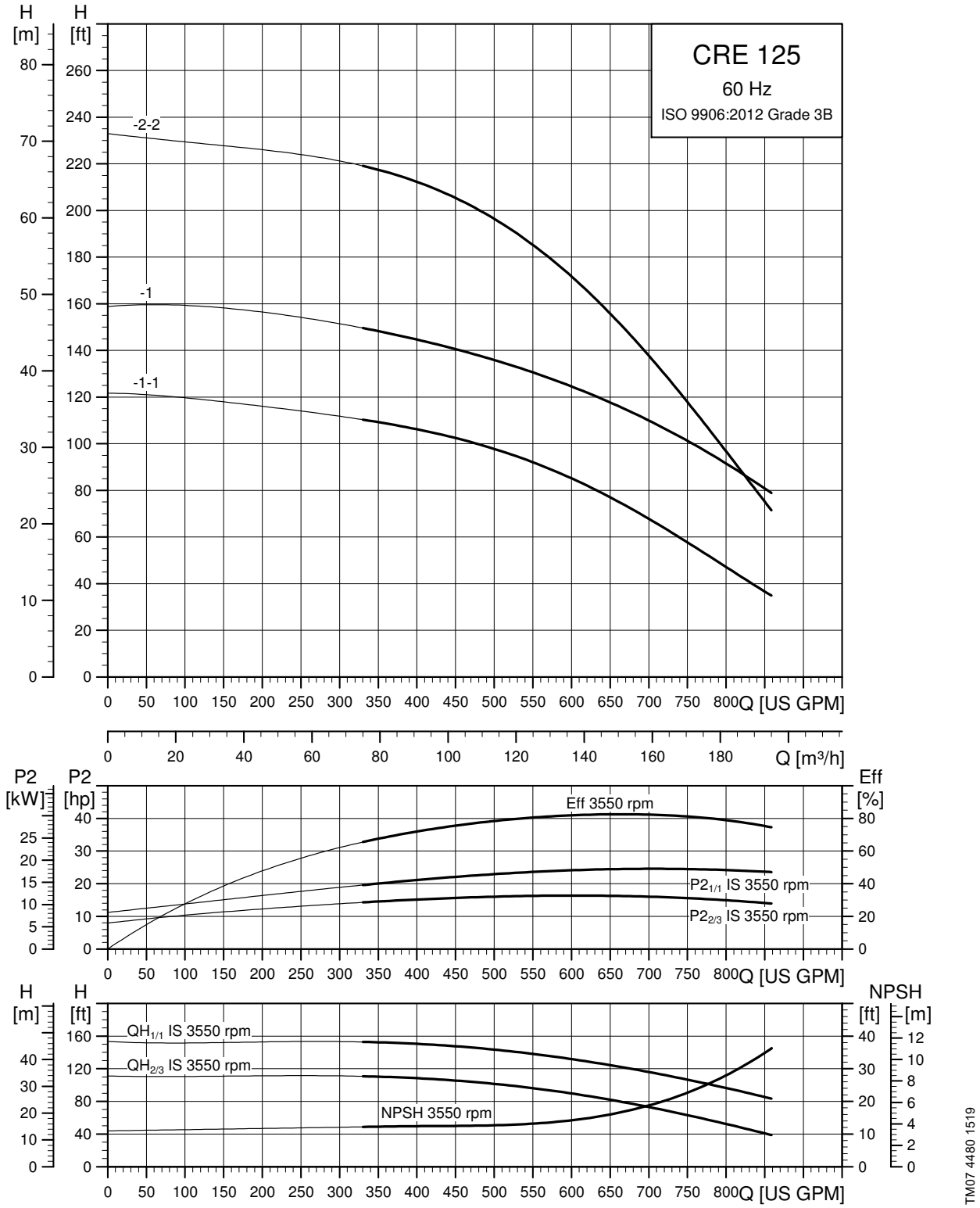

The maximum pump efficiency (Eff) is based on a three-stage pump.

CRE 125 dimensional data

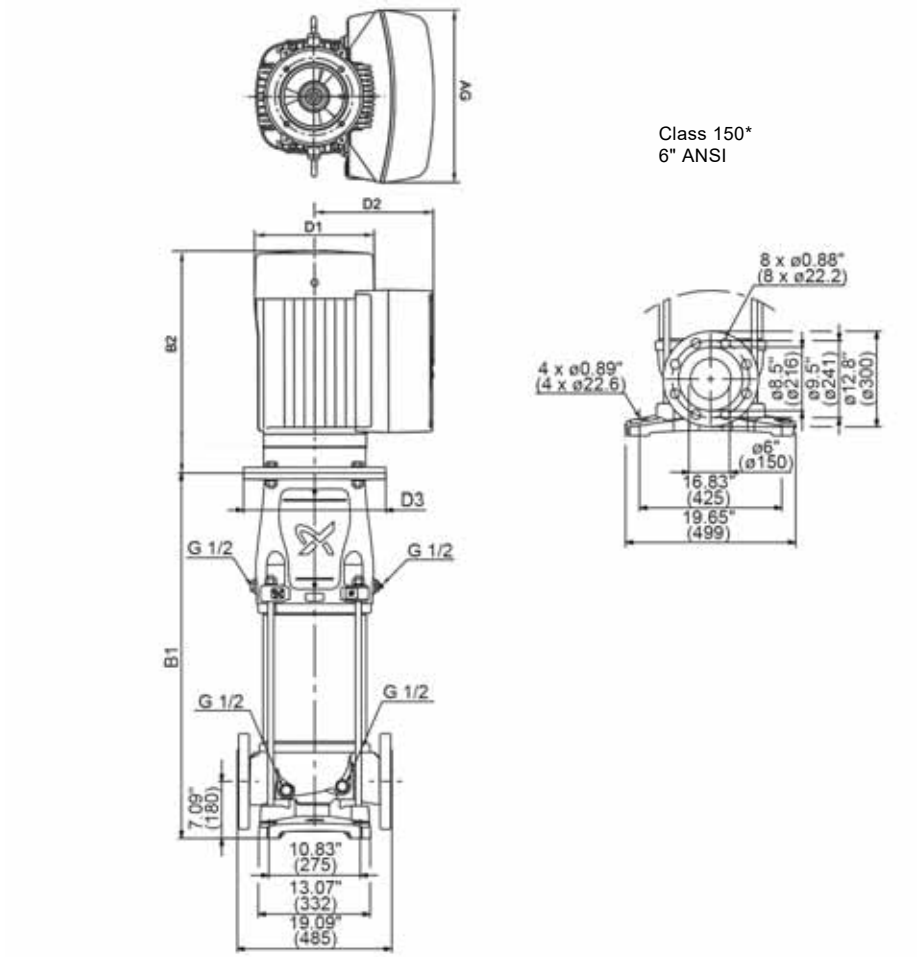

TM07 4467 1719

* CRE, CRNE 125 pumps with one to two stages are fitted with 150 lb (68 kg) flanges as standard.

Pump type	[HP (kW)]	PH	Voltage [V]	NEMA frame size	PEI_{vL}	Impeller diameter [in (mm)]	ANSI B1 [in (mm)]	MLE D1 [in (mm)]	MLE D2 [in (mm)]	AG [in (mm)]	ANSI MLE B1+B2 [in (mm)]	ANSI ship wt. [lbs (kg)]
CRE 125-1-1	20 (15)	3	460-480	256TC	0.59	6.38 (162)	30.83 (783)	13.54 (344)	12.13 (308)	16.54 (420)	50.04 (1271)	860 (390)
CRE 125-1	25 (18.5)	3	460-480	284TSC	0.59	6.38 (162)	30.91 (785)	13.54 (344)	12.13 (308)	16.54 (420)	54.06 (1373)	901 (409)
CRE 125-2-2	30 (22)	3	460-480	286TSC	0.59	6.38 (162)	35.71 (907)	13.54 (344)	12.13 (308)	16.54 (420)	58.86 (1495)	949 (430)

CRNE 125

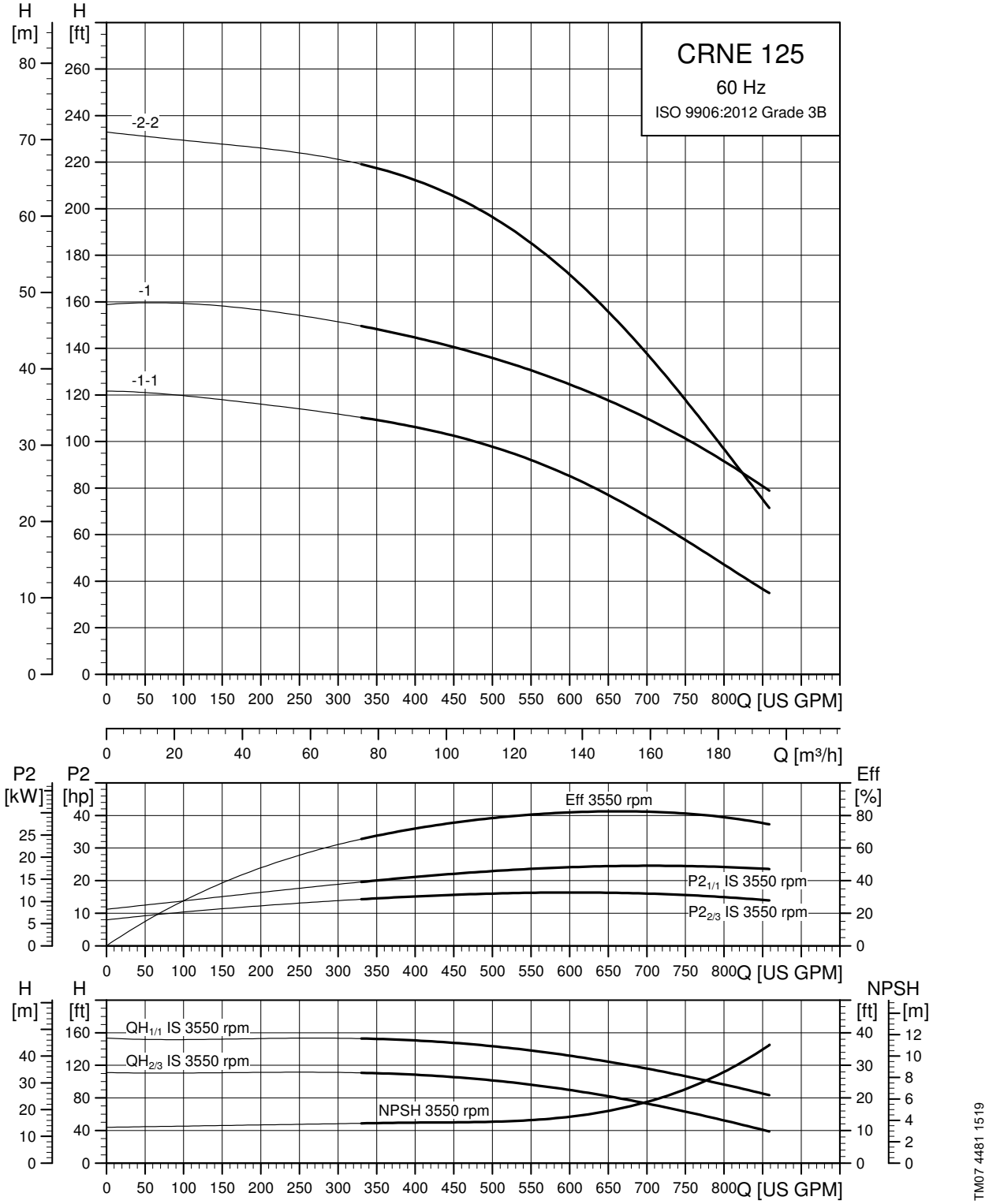

The maximum pump efficiency (Eff) is based on a three-stage pump.

CRNE 125 dimensional data

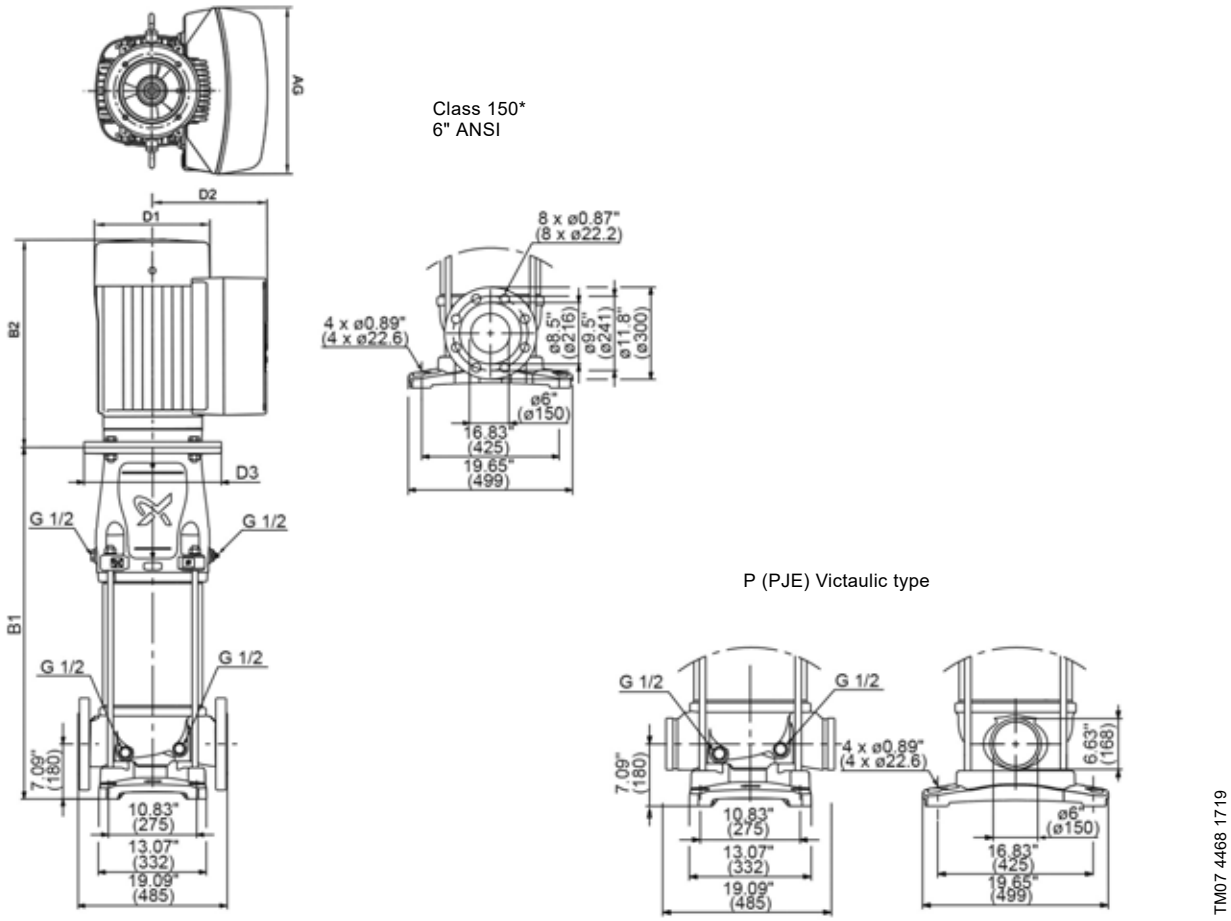

* CRE, CRNE 125 pumps with one to three stages are fitted with 150 lb (68 kg) flanges as standard.

Pump type	[HP (kW)]	PH	Voltage [V]	NEMA frame size	PEI_{VL}	Impeller diameter [in (mm)]	ANSI B1 [in (mm)]	MLE D1 [in (mm)]	MLE D2 [in (mm)]	AG [in (mm)]	ANSI MLE B1+B2 [in (mm)]	ANSI ship wt. [lbs (kg)]
CRNE 125-1-1	20 (15)	3	460-480	256TC	0.59	6.38 (162)	30.83 (783)	13.54 (344)	12.13 (308)	16.54 (420)	50.0 (1271)	838 (380)
CRNE 125-1	25 (18.5)	3	460-480	284TSC	0.59	6.38 (162)	30.91 (785)	13.54 (344)	12.13 (308)	16.54 (420)	54.06 (1373)	879 (399)
CRNE 125-2-2	30 (22)	3	460-480	286TSC	0.59	6.38 (162)	35.71 (907)	13.54 (344)	12.13 (308)	16.54 (420)	58.86 (1495)	927 (420)

CRE 155

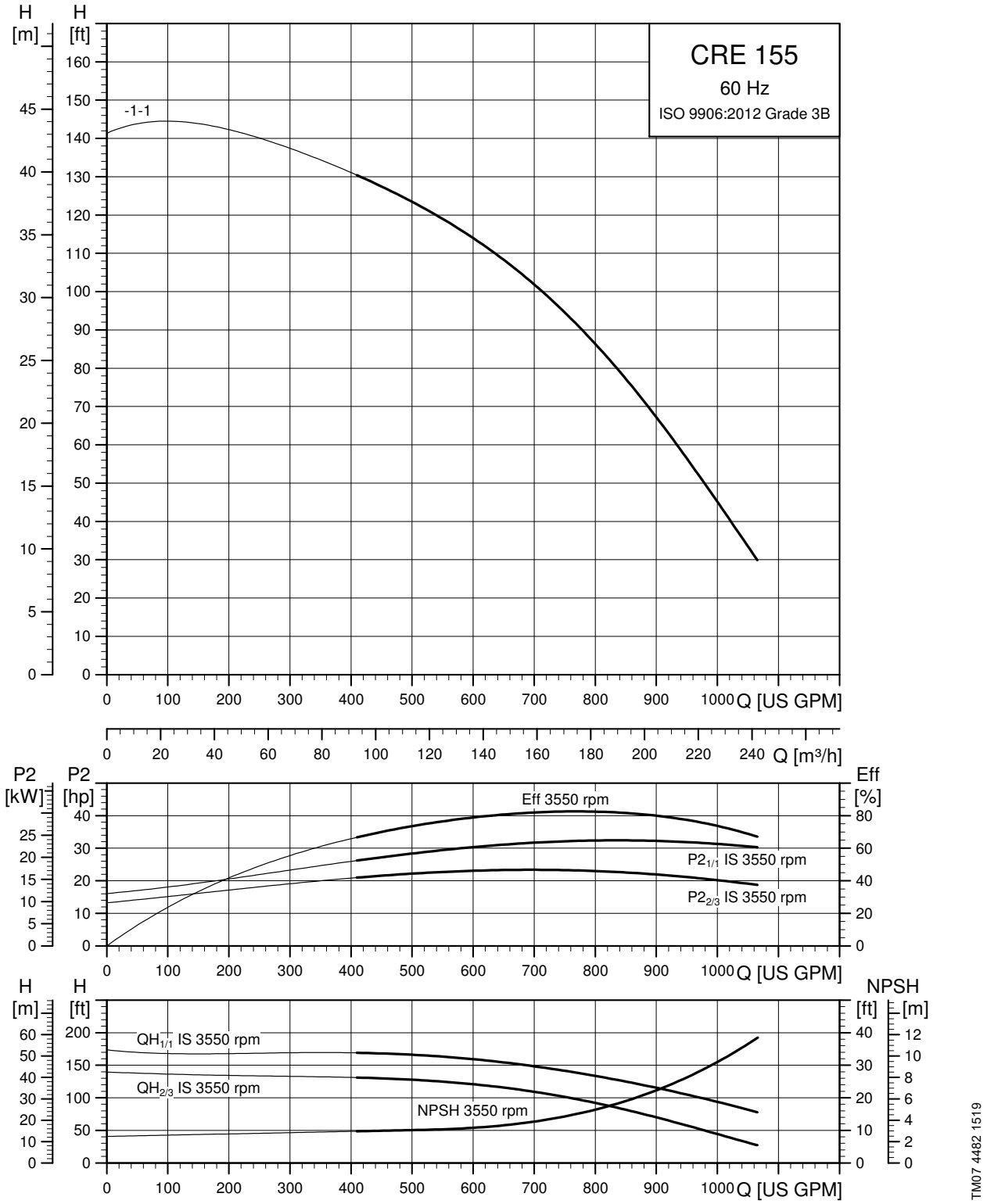

The maximum pump efficiency (Eff) is based on a three-stage pump.

CRE 155 dimensional data

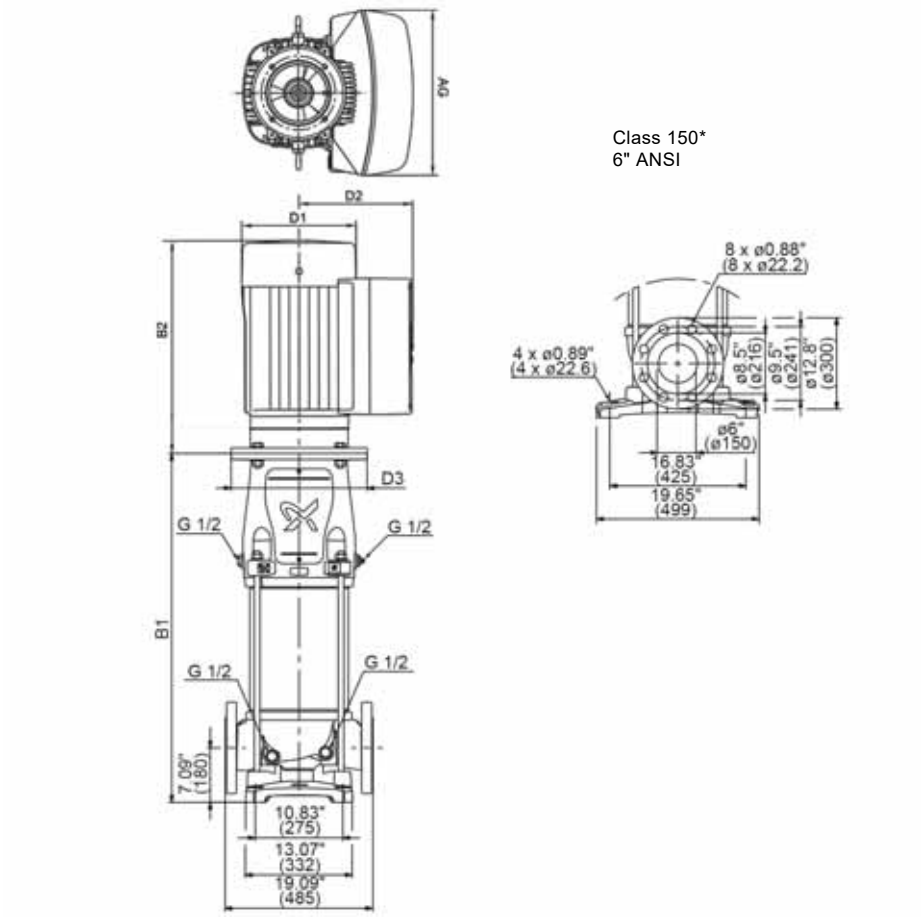

TM07 4467 1719

* CRE, CRNE 155 pumps with stages (with 1 reduced diameter impeller) are fitted with 150 lb. (68 kg) flanges as standard.

Pump type	[HP (kW)]	PH	Voltage [V]	NEMA frame size	PEI_{VL}	Impeller diameter [in (mm)]	ANSI B1 [in (mm)]	MLE D1 [in (mm)]	MLE D2 [in (mm)]	AG [in (mm)]	ANSI MLE B1+B2 [in (mm)]	ANSI ship wt [lbs (kg)]
CRE 155-1-1	25 (18.5)	3	460-480	284TSC	0.58	6.64 (169)	30.91 (785)	13.54 (344)	12.13 (308)	16.54 (420)	54.06 (1373)	902 (409)

CRNE 155

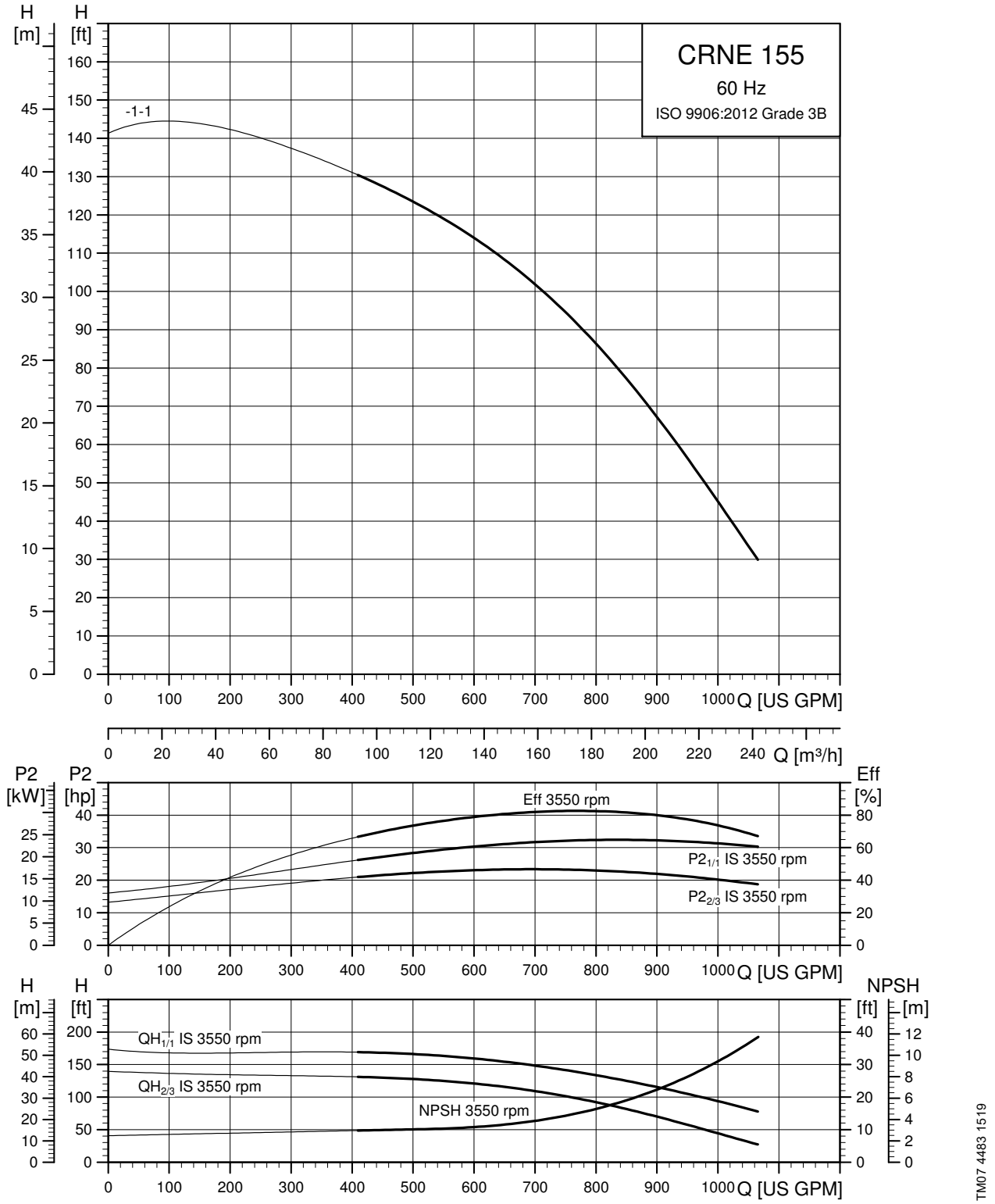

The maximum pump efficiency (Eff) is based on a three-stage pump.

CRNE 155 dimensional data

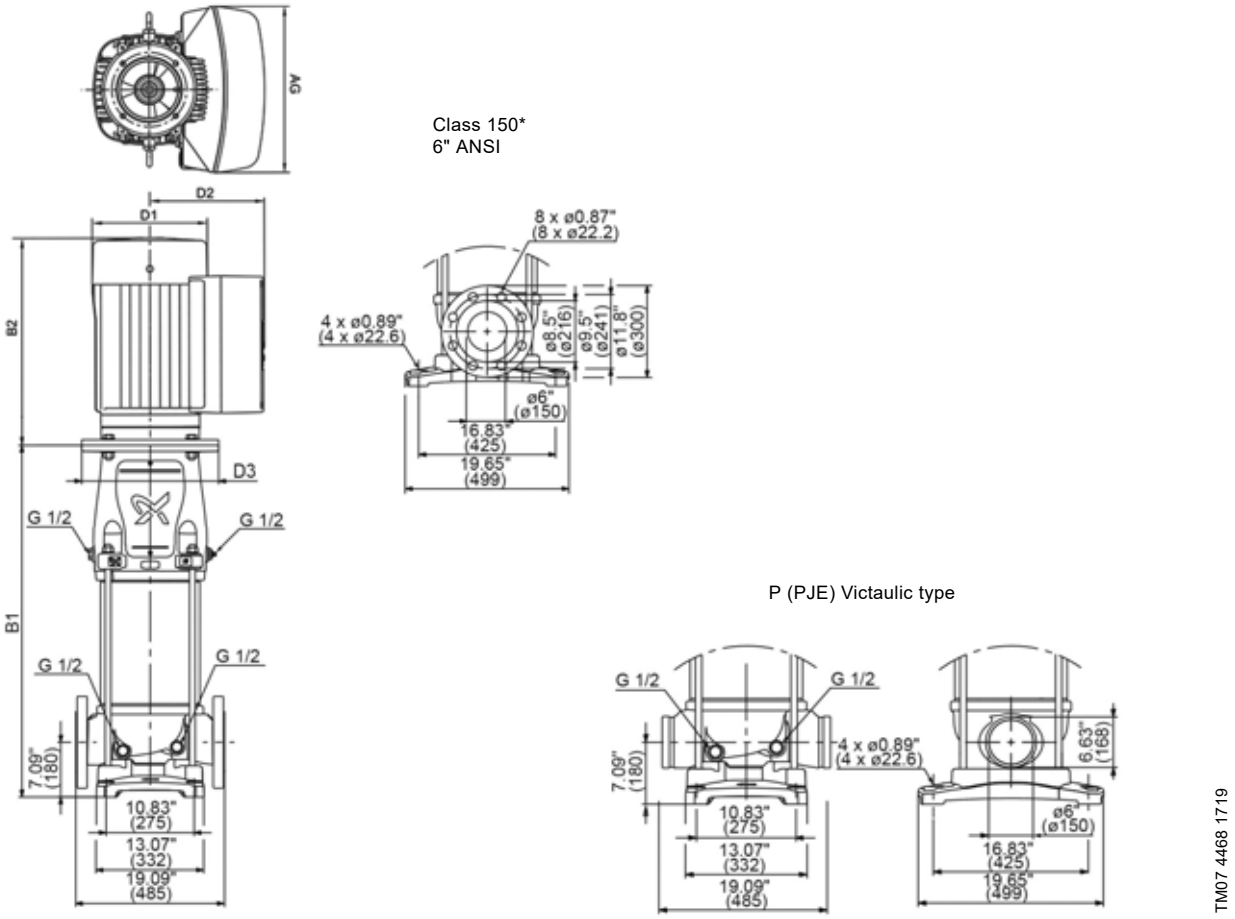

* CRE, CRNE 155 pumps with stages (with one reduced diameter impeller) are fitted with 150 lb (68 kg) flanges as standard.

Pump type	[HP (kW)]	PH	Voltage [V]	NEMA frame size	PEI_{VL}	Impeller diameter [in (mm)]	ANSI B1 [in (mm)]	MLE D1 [in (mm)]	MLE D2 [in (mm)]	AG [in (mm)]	ANSI MLE B1+B2 [in (mm)]	ANSI ship wt [lbs (kg)]
CRNE 155-1-1	25 (18.5)	3	460-480	284TSC	0.58	6.64 169)	30.91 (785)	13.54 (344)	12.13 (308)	16.54 (420)	54.06 (1373)	880 (409)

11. Motor data

CRE, CRIE, CRNE 60 Hz pumps

TM06 9830 0817

2 pole

HP	Voltage [V]	PH	NEMA frame Size	Service Factor	Motor full load efficiency [%]	Full load current amps[3] [A]	Service factor current amps [A]	Power factor	Full load speed [rpm]	Sound pressure level [dB(A)]
1/2[1]	200-240	1	56C	1	84*	2.40 - 2.10	-	0.96	3400	58
3/4[1]	200-240	1	56C	1	85.3*	3.45 - 2.90	-	0.98	3400	58
1[1]	200-240	1	56C	1	85.2*	4.70 - 3.90	-	0.99	3400	58
1[1]	440-480	3	56C	1.25	86.4*	1.65	2.10	0.73	3480	58
1 1/2[1]	200-240	1	56C	1	86.9*	6.70 - 5.60	-	0.99	3400	58
1 1/2[1]	200-240	3	56C	1.15	89.3*	4.00 - 3.40	4.60 - 3.90	0.91	3480	55
1 1/2[1]	440-480	3	56C	1.15	89.6*	2.05	2.40	0.84	3480	58
2[1]	200-240	1	56C	1	87.4*	9.10 - 7.60	-	0.99	3400	64
2[1]	200-240	3	56C	1.00	88.90*	5.40 - 4.50	-	0.92	3480	55
2[1]	440-480	3	56C	1.15	89.4*	2.65	3.00	0.87	3480	64
3[1]	200-240	3	182TC	1.15	88.70*	7.90 - 6.60	9.10 - 7.60	0.94	3480	62
3[1]	440-480	3	182TC	1.15	90.7*	3.8	4.30	0.89	3480	64
5[1]	200-240	3	182TC	1.15	90.90*	13.2 - 10.9	14.90 - 12.40	0.94	3480	66
5[1]	440-480	3	182TC	1.15	92.5*	6.20 - 5.80	7.00 - 6.60	0.90	3500	60
7 1/2[1]	200-240	3	213TC	1.15	90.20*	20.0 - 16.6	23.0 - 19.3	0.94	3480	70
7 1/2[1]	440-480	3	213TC	1.15	92.4*	9.10 - 8.50	10.4 - 9.70	0.91	3500	60
10[1]	440-480	3	213TC	1.15	92.5*	12.4 - 11.5	14.2 - 13.0	0.91	3500	65
15[1]	440-480	3	254TC	1.15	93.2*	17.9 - 16.6	20.5 - 19.0	0.92	3500	65
20[2]	460-480	3	256TC	1.15	91	24.00	27.50	0.89	3540	68
25[2]	460-480	3	284TC	1.15	91.7	30.50	35.00	0.88	3540	70
30[2]	460-480	3	286TC	1.15	91.7	36.50	42.00	0.88	3540	70

1) Permanent-magnet motor
2) Asynchronous motor
3) At 460 V for 460-480 V motors
* Efficiency of motor and VFD

12. Pumped liquids

The pumps are suitable for pumping thin, non-explosive liquids, not containing solid particles or fibers. The liquid must not chemically attack the pump materials. When pumping liquids with a density and/or viscosity higher than that of water, oversized motors must be used.

Whether a pump is suitable for a particular liquid depends on a number of factors of which the most important are the chloride content, pH value, temperature and content of chemicals, oils, etc.

Please note that aggressive liquids, such as sea water and some acids, may attack or dissolve the protective oxide film of the stainless steel and thus cause corrosion. The CRE, CRIE, CRNE pump types are suitable for the following liquids:

CRE, CRIE

- Non-corrosive liquids.

For liquid transfer, circulation and pressure boosting of cold or hot clean water.

CRNE

Industrial liquids in systems where all parts in contact with the liquid must be made of high-grade stainless steel.

CRTE

- Saline liquids
- hypochlorites
- acids.

For saline or chloride-containing liquids, such as sea water, or oxidizing agents, such as hypochlorites, CRTE pumps of titanium are available. See separate product guide on CRT, CRTE.

List of pumped liquids

A number of typical liquids are listed on the following pages.

Other pump versions may be applicable, but those stated in the list are considered to be the best choices. The table is intended as a general guide only, and cannot replace actual testing of the pumped liquids and pump materials under specific working conditions.

The list should, however, be applied with some caution as factors such as the following may affect the chemical resistance of a specific pump version:

- concentration of the pumped liquid
- liquid temperature
- pressure.

Safety precautions must be made when pumping dangerous liquids.

Notes

D	Often with additives.
E	Density and/or viscosity differ from that of water. Allow for this when calculating motor output and pump performance.
F	Pump selection depends on many factors. Contact Grundfos.
H	Risk of crystallization/precipitation in shaft seal
1	The pumped liquid is highly flammable.
2	The pumped liquid is combustible.
3	Insoluble in water.
4	Low self-ignition point.

Pumped liquid	Chemical formula	Note	Liquid concentration, liquid temperature	CRE	CRNE
Acetic acid	CH_3COOH	-	5 %, 68 °F (20 °C)	-	HQQE
Acetone	CH_3COCH_3	1, F	100 %, 68 °F (20 °C)	-	HQQE
Alkaline degreasing agent		D, F	-	HQQE	-
Ammonium bicarbonate	NH_4HCO_3	E	20 %, 86 °F (30 °C)	-	HQQE
Ammonium hydroxide	NH_4OH	-	20 %, 104 °F (40 °C)	HQQE	-
Aviation fuel		1, 3, 4, F	100 %, 68 °F (20 °C)	HQBV	-
Benzoic acid	C_6H_5COOH	H	0.5 %, 68 °F (20 °C)	-	HQQV
Boiler water		-	< 248 °F (120 °C)	HQQE	-
		F	248-356 °F (120-180 °C)	-	-
Calcareous water		-	< 194 °F (90 °C)	HQQE	-
Calcium acetate (as coolant with inhibitor)	$Ca(CH_3COO)_2$	D, E	30 %, 122 °F (50 °C)	HQQE	-
Calcium hydroxide	$Ca\ (OH)_2$	E	Saturated solution, 122 °F (50 °C)	HQQE	-
Chloride-containing water		F	< 86 °F (30 °C), maximum 500 ppm	-	HQQE
Chromic acid	H_2CrO_4	H	1 %, 68 °F (20 °C)	-	HQQV
Citric acid	$HOC(CH_2CO_2H)_2COOH$	H	5 %, 104 °F (40 °C)	-	HQQE
Completely desalinated water (demineralized water)		-	248 °F (120 °C)	-	HQQE
Condensate		-	248 °F (120 °C)	HQQE	-
Copper sulphate	$CuSO_4$	E	10 %, 122 °F (50 °C)	-	HQQE
Corn oil		D, E, 3	100 %, 176 °F (80 °C)	HQQV	-
Diesel oil		2, 3, 4, F	100 %, 68 °F (20 °C)	HQBV	-
Domestic hot water (potable water)		-	< 248 °F (120 °C)	HQQE	-
Ethanol (ethyl alcohol)	C_2H_5OH	1, F	100 %, 68 °F (20 °C)	HQQE	-
Ethylene glycol	$HOCH_2CH_2OH$	D, E	50 %, 122 °F (50 °C)	HQQE	-
Formic acid	$HCOOH$	-	5 %, 68 °F (20 °C)	-	HQQE
Glycerine (glycerol)	$OHCH_2CH(OH)CH_2OH$	D, E	50 %, 122 °F (50 °C)	HQQE	-
Hydraulic oil (mineral)		E, 2, 3	100 %, 212 °F (100 °C)	HQQV	-
Hydraulic oil (synthetic)		E, 2, 3	100 %, 212 °F (100 °C)	HQQV	-
Isopropyl alcohol	$CH_3CHOHCH_3$	1, F	100 %, 68 °F (20 °C)	HQQE	-
Lactic acid	$CH_3CH(OH)COOH$	E, H	10 %, 68 °F (20 °C)	-	HQQV
Linoleic acid	$C_{17}H_{31}COOH$	E, 3	100 %, 68 °F (20 °C)	HQQV	-
Methanol (methyl alcohol)	CH_3OH	1, F	100 %, 68 °F (20 °C)	HQQE	-
Motor oil		E, 2, 3	100 %, 176 °F (80 °C)	HQQV	-
Naphthalene	$C_{10}H_8$	E, H	100 %, 176 °F (80 °C)	HQQV	-
Nitric acid	HNO_3	F	1 %, 68 °F (20 °C)	-	HQQE
Oil-containing water		-	< 212 °F (100 °C)	HQQV	-
Olive oil		D, E, 3	100 %, 176 °F (80 °C)	HQQV	-
Oxalic acid	$(COOH)_2$	H	1 %, 68 °F (20 °C)	-	HQQE
Ozone-containing water	(O_3)	-	< 212 °F (100 °C)	-	HQQE
Peanut oil		D, E, 3	100 %, 176 °F (80 °C)	HQQV	-
Petrol		1, 3, 4, F	100 %, 68 °F (20 °C)	HQBV	-
Phosphoric acid	H_3PO_4	E	20 %, 68 °F (20 °C)	-	HQQE
Propanol	C_3H_7OH	1, F	100 %, 68 °F (20 °C)	HQQE	-
Propylene glycol	$CH_3CH(OH)CH_2OH$	D, E	50 %, 194 °F (90 °C)	HQQE	-
Potassium carbonate	K_2CO_3	E	20 %, 122 °F (50 °C)	HQQE	-
Potassium formate (as coolant with inhibitor)	$KOOCH$	D, E	30 %, 122 °F (50 °C)	HQQE	-
Potassium hydroxide	KOH	E	20 %, 122 °F (50 °C)	-	HQQE
Potassium permanganate	$KMnO_4$	-	5 %, 68 °F (20 °C)	-	HQQE
Rape seed oil		D, E, 3	100 %, 176 °F (80 °C)	HQQV	-
Salicylic acid	$C_6H_4(OH)COOH$	H	0.1 %, 68 °F (20 °C)	-	HQQE
Silicone oil		E, 3	100 %	HQQV	-
Sodium bicarbonate	$NaHCO_3$	E	10 %, 140 °F (60 °C)	-	HQQE
Sodium chloride (as coolant)	$NaCl$	D, E	30 %, < 41 °F (5 °C), pH > 8	HQQE	-
Sodium hydroxide	$NaOH$	E	20 %, 122 °F (50 °C)	-	HQQE
Sodium hypochlorite	$NaOCl$	F	0.1 %, 68 °F (20 °C)	-	HQQV
Sodium nitrate	$NaNO_3$	E	10 %, 140 °F (60 °C)	-	HQQE
Sodium phosphate	Na_3PO_4	E, H	10 %, 140 °F (60 °C)	-	HQQE
Sodium sulphate	Na_2SO_4	E, H	10 %, 140 °F (60 °C)	-	HQQE
Softened water		-	< 248 °F (120 °C)	-	HQQE
Soya oil		D, E, 3	100 %, 176 °F (80 °C)	HQQV	-
Sulphuric acid	H_2SO_4	F	1 %, 68 °F (20 °C)	-	HQQV
Sulphurous acid	H_2SO_3	-	1 %, 68 °F (20 °C)	-	HQQE
Unsalted swimming-pool water		-	Approx. 2 ppm free chlorine (Cl_2)	HQQE	-

13. Accessories

Counterflanges for CRE

A set consists of two counterflanges, two gaskets, bolts and nuts.

Counterflange		Pump type	Description	Pressure class	Pipe connection	Product number
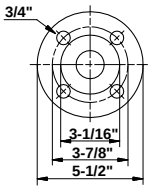	TM02 5691 3802	**CRE 1s** **CRE 1** **CRE 3** **CRE 5**	Threaded	ANSI 250 lb.	1 1/4" NPT	91122260
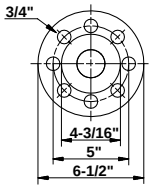	TM02 5692 3802	**CRE 10** **CRE 15** **CRE 20**	Threaded	ANSI 250 lb.	2" NPT	335021
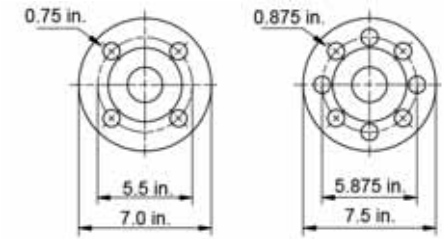	TM07 4429 1419 - TM07 4432 1419	**CRE 32**	Threaded	ANSI 125 lb.	2 1/2" NPT	559601
			Threaded	ANSI 250 lb.	2 1/2" NPT	345050
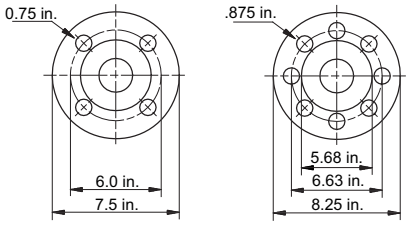	TM02 5695 1515 - TM02 5696 3802	**CRE 45**	Threaded	ANSI 125 lb.	3" NPT	569601
			Threaded	ANSI 250 lb.	3" NPT	91121952
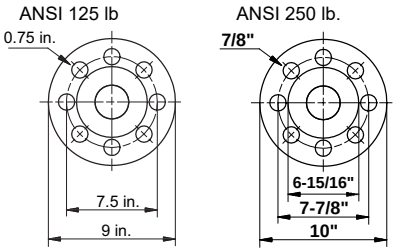	TM02 5697 3802 - TM02 5698 3802	**CRE 64** **CRE 95**	Threaded	ANSI 125 lb.	4" NPT	579801
			Threaded	ANSI 250 lb.	4" NPT	3600028
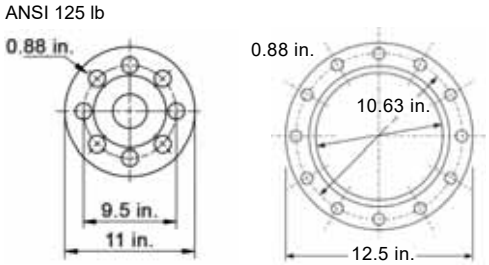	TM 07 4435 1419 - TM 07 4433 1419	**CRE 125** **CRE 155**	Threaded	ANSI 125 lb.	6" NPT	
			Threaded	ANSI 250 lb.	6" NPT	

Counterflanges for CRNE

Counterflanges for CRNE pumps are made of stainless steel according to AISI 316.
A set consists of two counterflanges, two gaskets, bolts and nuts.

Counterflange		Pump type	Description	Pressure class	Pipe connection	Product number
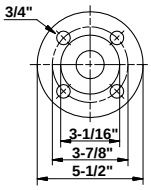	TM02 5691 3802	**CRIE, CRNE 1s, 1, 3 and 5**	Threaded	ANSI 300 lb.	1 1/4" NPT	91129013
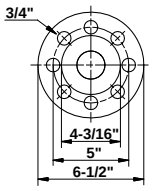	TM02 5692 3802	**CRI, CRN 10, 15, 20**	Threaded	ANSI 300 lb.	2" NPT	339919
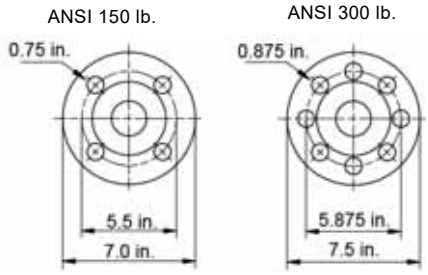	TM07 4429 1419 -TM07 4432 1419	**CRNE 32**	Threaded	ANSI 150 lb.	2 1/2" NPT	91121951
			Threaded	ANSI 300 lb.	2 1/2" NPT	0ID00138
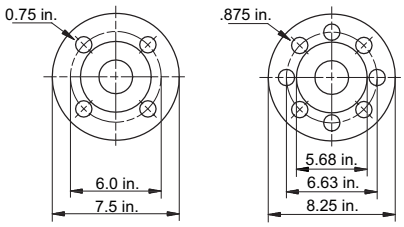	TM02 5695 3802 - TM02 5696 3802	**CRNE 45**	Threaded	ANSI 150 lb.	3" NPT	91121953
			Threaded	ANSI 300 lb.	3" NPT	91121954
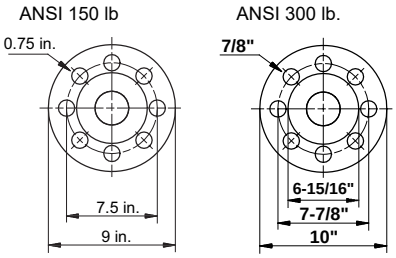	TM02 5697 3802 - TM02 5698 3802	**CRNE 64 CRNE 95**	Threaded	ANSI 150 lb.	4" NPT	0ID00148
			Threaded	ANSI 300 lb.	4" NPT	91121955
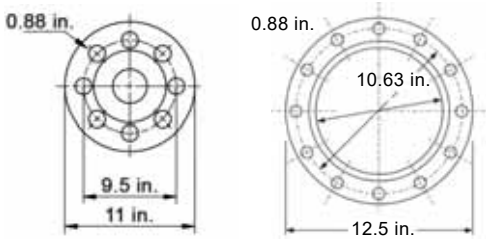	TM07 4435 1419 - TM07 4433 1419	**CRNE 125 CRNE 155**	Threaded	ANSI 150 lb.	6" NPT	
			Threaded	ANSI 300 lb.	6" NPT	

PJE couplings for CRNE

Couplings for CRNE pumps are made of stainless steel according to AISI 316.
A set consists of two couplings, two gaskets, two pipe stub and bolts and nuts.

Couplings	Pump type	Pipe stub	Rated pressure	Pipe connection	Rubber parts	Number of coupling sets needed	Product number
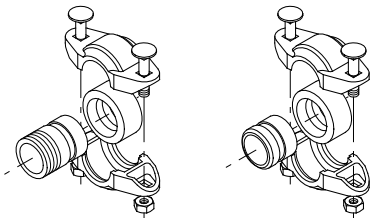 TM00 3808 1094	**CRIE, CRNE 1, 3 and 5**	Threaded	1160 psi	1 1/4" NPT	EPDM	1	4013010
					FKM	1	0ID00118
	CRIE, CRNE 10, 15 and 20	Threaded	1015 psi	2" NPT	EPDM	1	331301
					FKM	1	0ID00128
	CRN 32	Threaded	-	3" NPT	EPDM / FKM	-	-
	CRN 45 CRN 64 CRN 95	Threaded	-	4" NPT	EPDM / FKM	-	-
	CRN 125 CRN 155	Threaded	-	6" NPT	EPDM / FKM	-	-

FlexiClamp base connections

All sets comprise the necessary number of bolts and nuts as well as a gasket or O-ring.

Base connections	Pump type	Connection	Pipe connection	Rubber parts	Product number
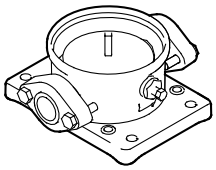 TM02 1144 0601	**CRIE, CRNE 1, 3 and 5**	Oval (cast iron)	1" NPT	Klingersil	96468491
			1 1/4" NPT	Klingersil	96470781
		Oval (stainless steel)	1" NPT	Klingersil	96480850
			1 1/4" NPT	Klingersil	96480851
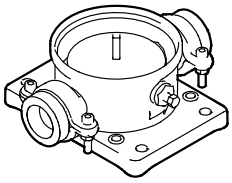 TM02 1145 0601	**CRIE, CRNE 1, 3 and 5**	Union ext threaded	2" NPT	EPDM	96480852
				FKM	96480853
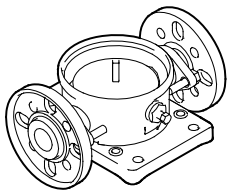 TM02 1146 0601	**CRIE, CRNE 1, 3 and 5**	ANSI (FGJ) (stainless steel)	1 1/4" NPT	EPDM	96480858
				FKM	96480859
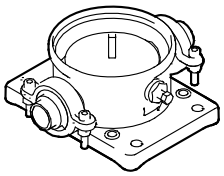 TM02 1147 0601	**CRIE, CRNE 1, 3 and 5**	Clamp, threaded pipe stub	1" NPT	EPDM	96480854
				FKM	96480855
			1 1/4" NPT	EPDM	96480856
				FKM	96480857
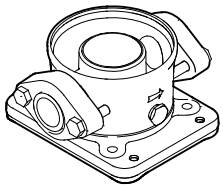 TM02 7237 2803	**CRIE, CRNE 10, 15 and 20**	Oval (cast iron)	2" NPT	Klingersil	96498838
		Oval (stainless steel)	2" NPT	Klingersil	96498839

Base connections	Pump type	Connection	Pipe connection	Rubber parts	Product number
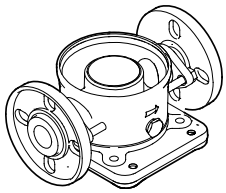 TM02 7238 2803	**CRIE, CRNE 10, 15 and 20**	ANSI (FGJ) (stainless steel)	2" NPT	EPDM	96511402
				FKM	96511403
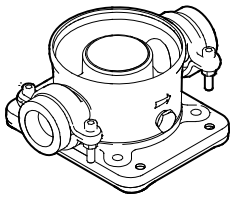 TM02 7239 2803	**CRIE, CRNE 10, 15 and 20**	Clamp, threaded pipe stub	1 1/2" NPT	EPDM	96500271
				FKM	96500272
			2" NPT	EPDM	96500273
				FKM	96500274
			2 " NPT	EPDM	96508602
				FKM	96508603

Potentiometer for CRE, CRIE, CRNE

Potentiometer for setpoint setting and start/stop of the CRE, CRIE, CRNE pump.

Product	Product number
External potentiometer with cabinet for wall mounting	625468

LiqTec

Description

LiqTec has the following features:

- Protection of the pump against dry-running.
- Protection of the pump against too high liquid temperature (+266 °F ± 9 °F (130 °C ± 5 °C)).
- A fail-safe design. If the sensor, sensor cable, electronic unit or power supply fails, the pump stops immediately.

LiqTec is not to be used with the MGFlex motor.

Mounting the LiqTec sensor

LiqTec can be fitted to a DIN rail to be incorporated in a control cabinet.

Electrical connection

For an example of electrical connection, see page 102.

LiqTec functions

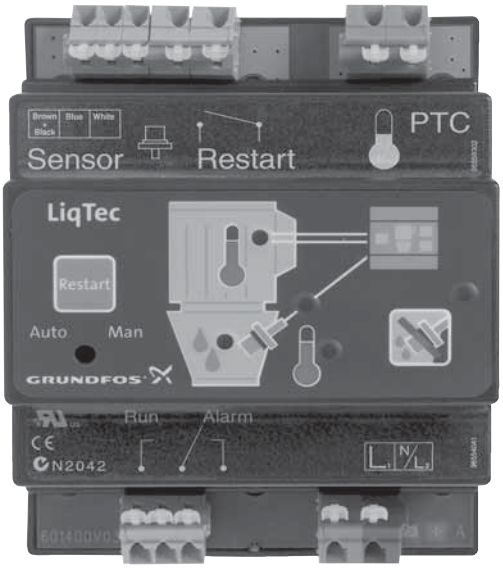

TM03 0111 4004

Fig. 58 LiqTec functions

1. **Connection for dry-running sensor**
2. **Connection for external restarting**
3. **Motor PTC**
   Green light indicates OK or short-circuited terminals. Red light indicates too high motor temperature. The alarm relay is activated.
4. **Connection for PTC sensor**
   This input is not used in connection with E-pumps as the variable frequency drive protects the motor against overload.
5. **Sensor indicator light**
   Red light indicates a defective sensor or cable. The alarm relay is activated.
6. **Deactivation of the dry-running monitoring function**
   Press the button to deactivate the dry-running monitoring function. The indicator light flashes red. The PTC monitoring function is still active. Press [Restart] to reactivate the dry-running monitoring function.
7. **High liquid temperature indicator light**
   Red light indicates too high liquid temperature (+266 °F ± 9 °F (130 °C ± 5 °C)). The alarm relay is activated.
8. **Supply voltage**
   200-240 VAC, 50/60 Hz and 80-130 VAC 50/60 Hz.
9. **Dry-running indicator light**
   Green light indicates OK (liquid in pump). Red light indicates dry running (no liquid in pump). The alarm relay is activated.
10. **Alarm/Run relay output**
    Potential-free changeover contact. Maximum contact load: 250 V, 1 A, AC (inductive load).
11. **Auto/Man**
    Changeover between automatic and manual restarting. The default setting is "Man". Changeover is carried out by means of a small screwdriver. When "Auto" has been selected, the alarm indication will automatically be reset 10 to 20 seconds after detection of liquid.
12. **Restart**
    Press [Restart] to restart the pump. The button has no influence on the PTC monitoring.

Calibration of sensor and controller

Step	Action	Result
1	Connect the sensor to pos. 1 on the controller, and connect the power supply to pos. 8 on the controller. See page 102.	
2	Submerge the sensor into the pumped liquid. The pumped liquid and the air temperature are to be +70 °F (21 °C). Note that it is important that the pumped liquid is stagnant as the calibration will be misleading if the sensor is cooled by flowing water.	
3	Press the buttons at pos. 6 and pos. 12 on the controller for approximately 20 seconds.	All red indicator lights (except pos. 7) start flashing.
4	When the green indicator lights at pos. 3 and pos. 9 on the controller are constantly on, release the buttons at pos. 6 and pos. 12.	The calibration is completed.

Further information

Information related to IEC 60730-1:

- Software class A
- Pollution degree 2
- Type 1.

LiqTec has been cURus-approved according to UL 508.

Maximum pressure: 580 psi (40 bar).

Maximum liquid temperature:

(+266 °F ± 9 °F (130 °C ± 5 °C)).

Maximum ambient temperature: +131 °F (+55 °C).

Power consumption: 5 Watt.

Enclosure class: IPX0.

Maximum cable length: 65.6 ft (20 m).

Standard cable: 16.4 ft (5 m).

Extension cable: 49.2 ft (15 m).

Note the following:

LiqTec is not be connected to the PTC sensor. Assemble a jumper wire between the two terminals at pos. 4 on the controller.

The MLE motor software provides protection against high motor temperature.

LiqTec is designed for DIN rail mounting in a control cabinet.

Dry-running protection	Single-phase power supply	LiqTec	Sensor 1/2 in (25 mm)	Cable 16.4 ft (5 m)	Extension cable 49.2 ft (15 m)	Product number
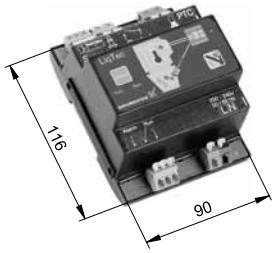	200-240 VAC	●	●	●	-	96556429
	80-130 VAC	●	●	●	-	96556430
	-	-	-	-	●	96443676
	-	-	●	●	-	96556427

TM02 1731 2001

Connection of E-pump to LiqTec

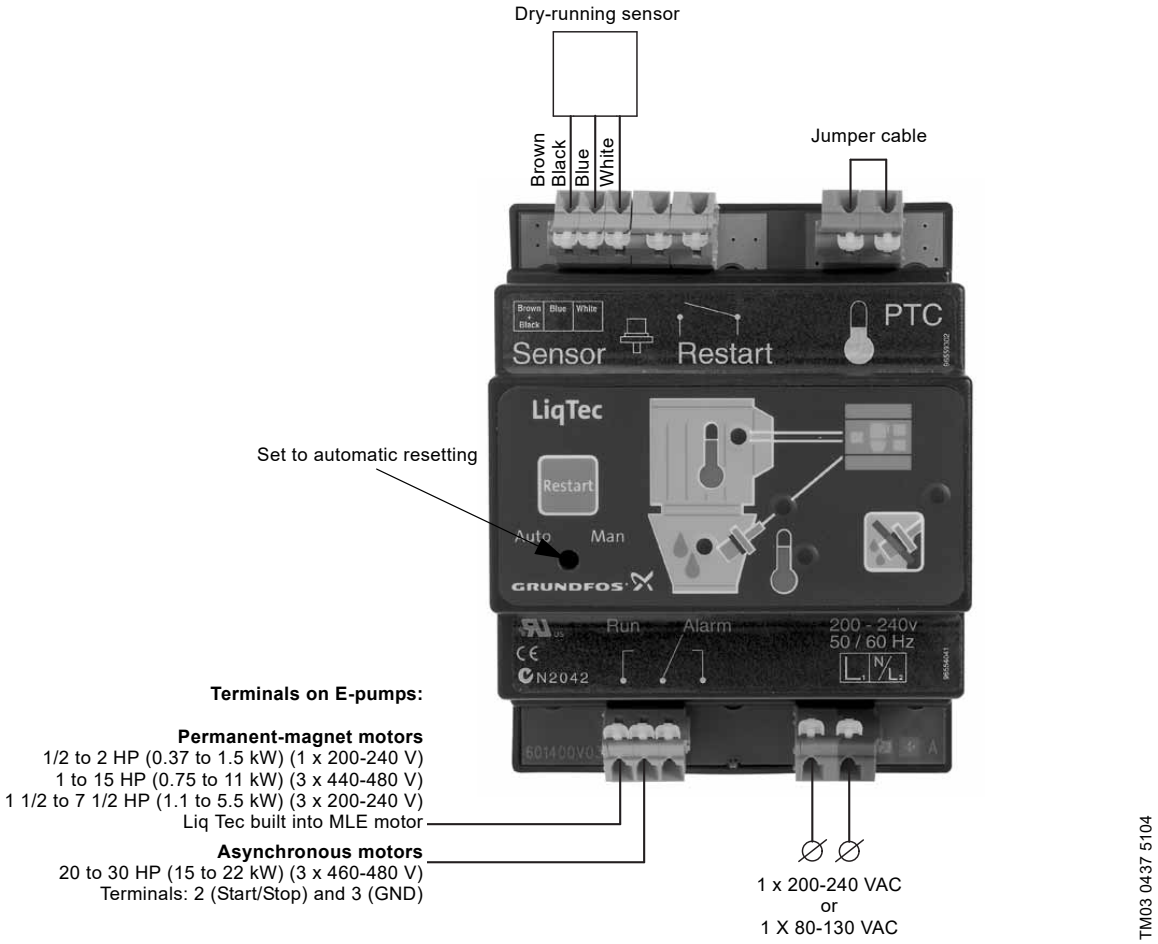

Fig. 59 Connection of E-pump to LiqTec

Setting the digital input

The digital input must be set to "External fault" via HMI 300 graphical operating panel.

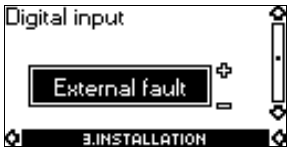

Note that after dry-running fault, the E-pump must be restarted manually.

Pressure sensors

Pressure sensor

TM05 1533 2911

Accessory	Supplier	Type	Pressure range [psi (bar)]	Product number
• Pressure sensors • Pressure transmitter with 6 ft (1.8 m) screened cable. • Connection: 1/4" - 18 NPT	Danfoss	MBS3000	0-87 (0-6)	91136169
			0-145 (0-10)	91136170
			0-232 (0-16)	91136171
			0-362 (0-25)	91136172
			0-580 (0-40)	91136173
			0-870 (0-60)	91136174

Technical data

Pressure sensor						
Product number	91136169	91136170	91136171	91136172	91136173	91136174
Pressure range [psi (bar)]	0-87 (0-6)	0-145 (0-10)	0-232 (0-16)	0-362 (0-25)	0-580 (0-40)	0-870 (0-60)
Maximum operating pressure [psi (bar)]	300 (20.1)	300 (20.1)	750 (51.7)	1450 (100)	2900 (200)	2900 (200)
Supply voltage	9-32 VDC					
Output signal [mA]	4-20					
Insulation resistance	> 100 MΩ at 100 V					
Accuracy, typical +/- FS [%]	0.5 %					
Response time, maximum [ms]	4 ms					
Medium temperature range [°F (°C)]	-40 to +185 °F (-40 °C to +85 °C)					
Ambient temperature range [°F (°C)]	-40 to +185 °F (-40 °C to +85 °C)					
Wetted parts, material	AISI 316L					
Housing material	AISI 316L					
Enclosure rating	IP65					
Weight [lbs (kg)]	0.3 (0.14)					
EMC - Emission	EN 61000-6-3					
EMC Immunity	EN 61000-6-2					
Pressure connection	NPT 1/4-18					
CE-marked	EMC-protected in accordance with EU EMC Directive					

Dimensions

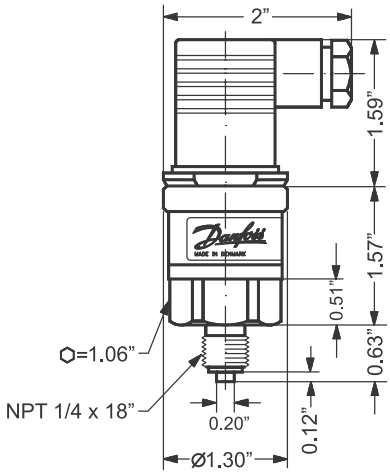

TM05 1532 2911

Fig. 60 Dimensional sketch

Grundfos differential-pressure sensor, DPI

TM03 2143 2206

Grundfos differential-pressure sensor, DPI	Pressure range [psi (bar)]	Product number
• 1 sensor incl. 3 ft (0.9 m) screened cable (7/16" connections) • 1 original DPI bracket (for wall mounting) • 1 Grundfos bracket (for mounting on motor) • 2 M4 screws for mounting of sensor on bracket • 1 M6 screw (self-cutting) for mounting on 3 HP (2.2 kW) and smaller • 1 M8 screw (self-cutting) for mounting on 5-10 HP (4-7 kW) • 1 M10 screw (self-cutting) for mounting on 15 - 25 HP (11-18 kW) • 1 M12 screw (self-cutting) for mounting on 30 HP (22 kW) • 3 capillary tubes (short/long) • 2 fittings (1/4" - 7/16") • 5 cable clips (black) • Installation and operating instructions	0 - 8.7 (0 - 0.6)	96611522
	0 - 14.5 (0 - 1.0)	96611523
	0-23 (0 - 1.6)	96611524
	0-36 (0 - 2.5)	96611525
	0-58 (0 - 4.0)	96611526
	0-87 (0 - 6.0)	96611527
	0-145 (0-10)	96611550

Select the differential-pressure sensor so that the maximum pressure of the sensor is higher than the maximum differential pressure of the pump.

The sensor housing (3) and parts in contact with the liquid are made of Inox DIN 1.4305 with composite PA top (2). The connections (4) are DIN 1.4305, 7/16" UNF connection and gaskets are FKM. A black and screened cable (1) goes through a screwed connection PG with M12 x 1.5 connection.

The sensor is supplied with an angular bracket for mounting on the motor or bracket for wall mounting.

A specially coated silicon chip is used for greater accuracy.

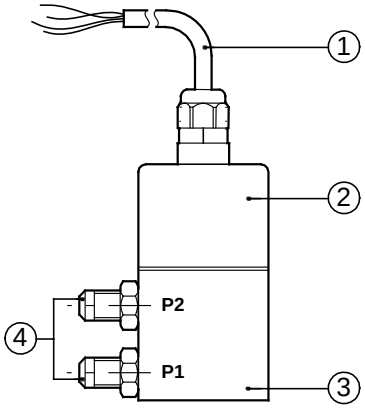

TM03 2057 3505

Fig. 61 DPI sensor

Technical data

Grundfos differential-pressure sensor, DPI							
Product number	96611522	96611523	96611524	96611525	96611526	96611527	96611550
Pressure ranges, differential pressure [psi (bar)]	0 - 8.7 (0 - 0.6)	0 - 14.5 (0 - 1.0)	0-23 (0 - 1.6)	0-36 (0 - 2.5)	0-58 (0 - 4.0)	0-87 (0 - 6.0)	0-145 (0-10)
Supply voltage	12-30 VDC						
Output signal	4-20 mA						
Load [Ω]	24 V: max. 500 [Ω], 16 V: max. 200 [Ω], 12 V: max. 100 [Ω]						
Maximum system pressure, P1 and P2 simultaneously [psi (bar)]	232 (16)						
Rupture pressure [bar]	1.5 x system pressure						
Measuring accuracy	2.5 % BFSL						
Response time	< 0.5 seconds						
Liquid temperature range	+14 °F to +158 °F (-10 °C to +70 °C)						
Storage temperature range	-40 °F to +176 °F (-40 °C to +80 °C)						
Electrical connection	26 GA, 3 ft (0.9 m) cable - M12 x 1.5 in (38 mm) sensor top						
Short-circuit-proof	Yes						
Protected against reverse polarity	Yes						
Over supply voltage	Yes						
Materials in contact with liquid	DIN 1.4305 FKM and PPS						
Enclosure class	IP55						
Weight [lb (kg)]	1.2 (0.54)						
EMC (electromagnetic compatibility)	According to EN 60335-1						
Emission/immunity	According to EN 61800-3						
Connections	7/16"-UNF						
Sealing material	FKM						

Dimensions

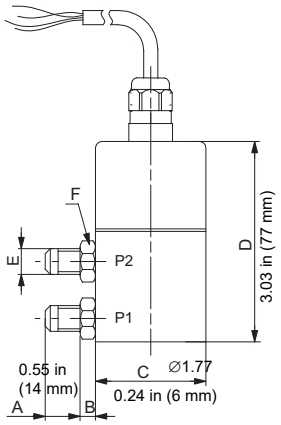

Fig. 62 Dimensional sketch

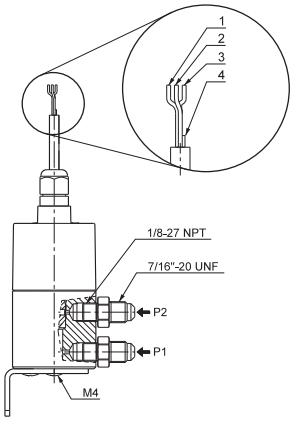

1	12-30 V supply voltage	Brown
2	GND (earth conductor)	Yellow
3	Signal conductor	Green
4	Test conductor (can be cut off during mounting). This conductor must not be connected to the power supply.	White

Fig. 63 Wiring

Grundfos differential-pressure sensor, DPI g.2 version

TM04 7866 2410

Grundfos differential-pressure sensor, DPI g.2 version	Pressure range [psi (bar)]	Product number
• 1 sensor • 1 capillary tube short version, • 1 fitting for capillary tube 6 ft (1.8 m) cable, • 1 installation and operation instructions	0 - 8.7 (0 - 0.6)	97747194
	0 - 14.5 (0 - 1.0)	97747195
	0-23 (0 - 1.6)	97747196
	0-36 (0 - 2.5)	97747197
	0-58 (0 - 4.0)	97747198
	0-87 (0 - 6.0)	97747199
	0-145 (0-10)	97747200

Select the differential-pressure sensor so that the maximum pressure of the sensor is higher than the maximum differential pressure of the pump.

All materials used for DPI 2 are AISI 316 L.

The fitting connection for capillary tube is 7/16" UNF. The cable has M12 x 4 connectors. The sensor is supplied with fittings for capillary tubing. Measuring technology is based on a coated silicon chip.

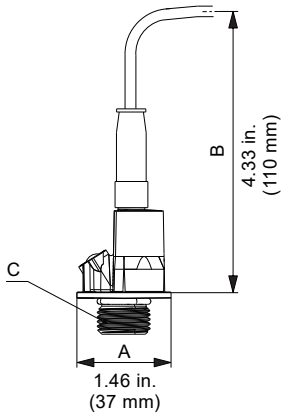

TM04 9237 3710

Fig. 64 DPI sensor g.2 version

Technical data

Grundfos differential-pressure sensor, DPI g.2 version							
Product number	97747194	97747195	97747196	97747197	97747198	97747199	97747200
Pressure ranges, differential pressure [psi (bar)]	0 - 8.7 (0 - 0.6)	0 - 14.5 (0 - 1.0)	0-23 (0 - 1.6)	0-36 (0 - 2.5)	0-58 (0 - 4.0)	0-87 (0 - 6.0)	0-145 (0-10)
Supply voltage	12-30 VDC						
Output signal	4-20 mA						
Load [Ω]	30 V DC: max. 900 ohms [Ω], 1.3 V: max. 100 [Ω], 12.5 V: max. 60 [Ω]						
Maximum system pressure, P1 and P2 simultaneously [psi (bar)]	870 (60)						
Rupture pressure [bar]	1.5 x system pressure						
Measuring accuracy	2.0 % FS						
Response time	< 100 ms (typical 50 ms)						
Liquid temperature range	-22 to +212 °F (-30 to +100 °C)						
Storage temperature range	-67 to +158 °F (-55 to +70 °C)						
Electrical connection	27 GA 6 ft (1.8) cable M12 x 4						
Short-circuit-proof	Yes						
Protected against reverse polarity	Yes						
Over supply voltage	Yes						
Materials in contact with liquid	AISI 316 L						
Enclosure class	IP67						
Weight [lbs]	1.2						
EMC (electromagnetic compatibility)	According to EN 61326-1						
Connections	7/16"-UNF						
Sealing material	EPDM						

Dimensions

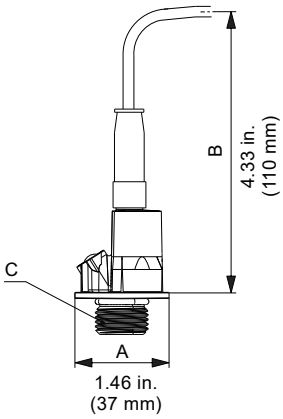

Fig. 65 DPI sensor g.2 version

Electrical connections

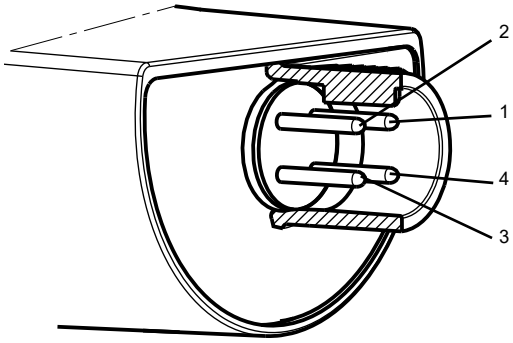

Fig. 66 Electrical connections

Pin	1	2	3	4
Wire color	Brown	Grey	Blue	Black
Output 4-20 mA	+	Not used	-	Not used
Output 2 x 0-10 V	+	Pressure signal	-*	Temperature signal

* Common ground for both pressure and temperature signal.
Power supply (screened cable): SELV or PELV.

Flow transmitters

- Flow tube of AISI 316 is mounted with a transmitter
- the transmitter is of AISI 316 L
- the output signal is 4-20 mA
- there are two flanges
- 15 ft (4.5 m) cable with free ends
- quick guide.

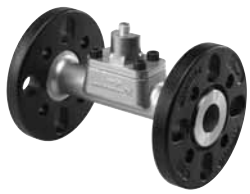

TM04 7362 2210

Type	Flow range [gpm (m^3/h)]	Connection	O-ring		Flange Material		Product number
			EPDM	FKM	Cast Iron	Stainless	
VFI 0.3-6	1.3 - 26 (0.3 - 7.0)	3/4"	•		•		97686127
	1.3 - 2.6 (0.35 - 0.7)	3/4"	•			•	97688293
VFI 0.6-12	2.6 - 53 (0.70 - 14.4)	1"	•		•		97686129
	2.6 - 53 (0.7 - 14.4)	1"	•			•	97688295
VFI 1.3-25	5.7 - 110 (1.5 - 30)	1 - 1/4"	•		•		97686141
	5.7 - 110 (1.5 - 30)	1 - 1/4"	•			•	97688297
VFI 2-40	8.8 - 176 (2.4 - 48)	1 - 3/4"	•		•		97686143
	8.8 - 176 (2.4 - 48)	1 - 3/4"	•			•	97688299
VFI 3.2-64	14-282 (3.8 - 76.9)	2"	•		•		97686145
	14-282 (3.8 - 76.9)	2"	•			•	97688301
VFI 5.2-104	23-458 (6.2 - 124.9)	2 - 1/2"	•		•		96788476
VFI 8-160	35-704 (9.5 - 192)	3"	•		•		97788478
VFI 8-160	53-1060 (14.4 - 289)	4"	•		•		97788492

1) For more information about the VFI sensor, see the Grundfos Direct Sensors™ data booklet, publication number 97790189, at www.grundfos.com (Grundfos Product Center).

Gauges for CRE, CRIE, CRNE

Accessory	Measuring range	Product number
Liquid-filled pressure gauge • AISI 304/copper	30" Hg - 30 psi (2 bar)	91123566
	0-60 psi (0-4 bar)	00ID8562
	0-100 psi (0-7 bar)	00ID8563
	0-160 psi (0-11 bar)	00ID8564
	0-200 psi (0-14 bar)	00ID8565
	0-300 psi (0-21 bar)	00ID8566
	0-400 psi (0-27 bar)	00ID8567
	0-600 psi (0-41 bar	00ID8568
Liquid-filled pressure gauge • AISI 316	30" Hg - 30 psi (2 bar)	91130835
	0-60 psi (0-4 bar)	00ID8569
	0-100 psi (0-7 bar)	00ID8570
	0-160 psi (0-11 bar)	00ID8571
	0-200 psi (0-14 bar)	00ID8572
	0-300 psi (0-21 bar)	00ID8573
	0-400 psi (0-27 bar)	00ID8574
	0-600 psi (0-41 bar)	00ID8575
	0-200 psi (0-14 bar)	00ID8576

Temperature sensor

TM07 4487 1519

Accessory:	Temperature sensor
Supplier:	Danfoss
Type:	MBT3270
Temperature range:	-58 °F to 392 °F (-50 to 200 °C)
Product number:	99501120

Output signal:	PT100 Class B, two-wire
Wetted parts, material:	AISI 316L
Cable:	6.5 ft. (1.9 m) silicone cable
Connection:	G 1/2 A thread Threads into CRE, CRNE pump head
O-rings:	EPDM and FKM included

Remote controls

Grundfos GO Remote

Grundfos GO Remote is used for wireless infrared or radio communication with the pumps.

Various Grundfos GO Remote variants are available. The variants are described in the following.

MI 204

MI 204 is an add-on module with built-in infrared and radio communication. MI 204 can be used in conjunction with an Apple iPhone or iPod with Lightning connector, such as fifth generation iPhone or iPod.

MI 204 is also available together with an Apple iPod touch and a cover.

TM05 7704 1513

Fig. 67 MI 204

Supplied with the product:

- Grundfos MI 204
- sleeve
- quick guide
- charger cable.

MI 301

MI 301 is a module with built-in infrared and radio communication. MI 301 can be used in conjunction with Android or iOS-based smart devices with Bluetooth connection. MI 301 has a rechargeable Li-ion battery and must be charged separately.

TM05 3890 1712

Fig. 68 MI 301

Supplied with the product:

- Grundfos MI 301
- sleeve
- battery charger
- quick guide.

Product numbers

Grundfos GO Remote variant	Product number
Grundfos MI 204	98424092
Grundfos MI 204 including iPod touch	98612711
Grundfos MI 301	98046408

CIU communication interface units

GrA 6118

Fig. 69 Grundfos CIU communication interface unit

The CIU standard interface units with internal power supply are suitable for Grundfos products that do not support the internal mounting of a communication interface module (CIM).

The CIU unit incorporates a 24-240 VAC/VDC power supply module.

The CIU unit can either be mounted on a DIN rail or on a wall.

We offer the following CIU units:

CIU 900

For mounting an add-on CIM module. CIU 900 includes an internal power supply.

A CIM module is required.

CIU 901

For mounting an add-on CIM 200, CIM 280 or CIM 500 module.

CIM 500 only supports Modbus TCP/IP and GiC/GRM IP when mounted in the CIU 901.

CIU 901 includes an internal power supply and an integrated input/output board. The built-in multi-purpose input/output board enables monitoring of standard pumps, sensors, meters and switches.

A CIM module is required.

Description	Fieldbus protocol	Product number
CIU 900	CIU unit only	99448387
CIU 901	CIU unit with input/ output board	99448389

CIM communication interface modules

GrA 6121

Fig. 70 Grundfos CIM communication interface module

The CIM modules enable communication of operating data, such as measured values and setpoints, between CRE, CRIE or CRNE pumps of 15-30 HP (11-22 kW) and a building management system. The CIM modules are add-on communication modules which are fitted in the terminal box of CRE, CRIE, CRNE pumps of 15-30 HP (11-22 kW). Note that CIM modules must be fitted by authorized persons.

We offer the following CIM modules:

CIM 100

For communication via LonWorks.

CIM 150

For communication via PROFIBUS DP.

CIM 200

For communication via Modbus RTU.

CIM 280

For connection to Grundfos iSOLUTIONS Cloud/GRM.

CIM 300

For communication via BACnet MS/TP.

CIM 500

Ethernet module for communication via PROFINET, Modbus TCP/IP, BACnet IP, GiC/GRM IP, EtherNet/IP, Grundfos iSOLUTIONS Cloud.

Description	Fieldbus protocol	Product number
CIM 100	LonWorks	96824797
CIM 150	PROFIBUS DP	96824793
CIM 200	Modbus RTU	96824796
CIM 280*	US GiC/GRM 3G/4G	99439725
CIM 300	BACnet MS/TP	96893770
CIM 500	Modbus TCP/IP, BACnet IP, PROFINET, GiC/GRM IP, EtherNet IP	98301408

* Antenna is not included. See below.

Antennas for CIM 280

Description	Product number
Antenna forGRM 3G/4G, flush mount	99606613
External mounting bracket for antenna. Optional.	99606614
Directional antenna for 3G/4G High gain. Includes mount and 25 ft cable.	98851149
Battery for CIM 280 3G/4G. For power loss to CIU. Optional.	99499908

For further information about data communication via CIM modules and fieldbus protocols, see the CIM documentation available at www.grundfos.com (Grundfos Product Center).

14. Variants

Lists of variants on request

Although the Grundfos CR, CRE, CRI, CRIE, CRN, CRNE product range offers a number of pumps for different applications, customers require specific pump solutions to satisfy their needs.

Below please find the range of options available for customizing the CR, CRE pumps to meet the customers' demands. Contact Grundfos for further information or for requests other than the ones mentioned below.

Motors

Variant	Description
Explosion-proof motors	For operation in hazardous atmospheres, explosion-proof or dust-ignition-proof motors may be required.
Motors with anti-condensation heating unit	For operation in humid environments motors with built-in anti-condensation heating may be required.
Premium efficient motors	Grundfos offers motors from 1 to 100 HP (0.74 to 75 kW) with a Premium efficiency class.
Different motor brand	If technically possible, Grundfos can fit the pump with a motor of a brand other than the standard. This will normally increase the time of delivery. Alternatively, the pump can be supplied without a motor (motor thrust rating must be checked).
Oversized motor	Ambient temperatures above 104 °F (40 °C) or installation at altitudes of more than 3280 ft above sea level require the use of an oversized motor (that is, derating).
4-pole motors	Grundfos offers standard motors fitted with 4-poles.

Connections and other variants

Variant	Description
Pipe connections	In addition to the wide range of standard flange connections, a 232 psi (16 bar) DIN standard clamping flange is available. Customized flanges are available according to specifications.
TriClamp connections	TriClamp connections are of a hygienic design with a sanitary coupling for use in the pharmaceutical and food industry.
Electropolished pumps	Electropolishing substantially reduces the risk of corrosion of the materials. Electropolishing is used in the pharmaceutical and food industry.

Shaft seals

Variant	Description
Shaft seal with FFKM O-ring material	We recommend shaft seals with FFKM or FXM O-ring material for applications where the pumped liquid may damage the standard O-ring material.
Seal with flush, quench seal	Recommended for applications involving crystallizing, hardening or sticky liquids.
Cool-Top® shaft seal system	Recommended for applications involving extremely high temperatures. No conventional mechanical shaft seal can withstand liquid temperatures of up to 356 °F (180 °C) for any length of time. For that type of application, we recommend Grundfos' unique air-cooled shaft seal system. In order to ensure a low liquid temperature around the standard shaft seal, the pump is fitted with a special air-cooled shaft seal chamber. No separate cooling is required.
Double shaft seal with pressure chamber	Recommended for applications involving poisonous or explosive liquids. Protects the surrounding environment and the people working in the vicinity of the pump. Consists of two seals mounted in a "back-to-back" arrangement inside a separate pressure seal chamber. As the pressure in the chamber is higher than the pump pressure, leakage is prevented. A dosing pump or a special pressure-intensifier generates the seal chamber pressure.
CRN MAGdrive	Magnetically driven pumps for industrial applications. Key applications are industrial processes involving the handling of aggressive, environmental, dangerous or volatile liquids, e.g. organic compounds, solvents, etc.

Pumps

Variant	Description
Horizontally mounted pump	For safety or height reasons, certain applications, for instance on ships, require the pump to be mounted in the horizontal position. For easy installation the pump is equipped with brackets that support motor and pump.
Low-temperature pump to -40 °F	Exposed to temperatures down to -40 °F (-40 °C) coolant pumps may require neck-rings with a different diameter in order to prevent impeller drag.
High-speed pump up to 681 psi	For high-pressure applications, a unique pump capable of generating up to 681 psi (47 bar) pressure is available. The pump is equipped with a high-speed motor, type MLE. The direction of rotation is the opposite of that of standard pumps, and the chamber stack is turned upside-down, as a result of which the pumped liquid flows in the opposite direction.
High-pressure pump up to 696 psi	For high-pressure applications, a unique double pump system capable of generating up to 696 psi (48 bar) pressure is available.
Low-NPSH pump (improved suction)	Recommended for boiler-feed applications where cavitation may occur due to poor inlet conditions.
Belt-driven pumps	Belt-driven pumps designed to operate in places with limited space or where no electrical power is available.
Pumps for pharmaceutical and biotechnological applications	CRN, CRNE pumps designed for applications requiring the sterilization and CIP capability of pipes, valves and pumps. (CIP = Clean-In-Place).

CRE, CRIE, CRNE

Vertical multistage centrifugal pumps

Company name:
Prepared by:
Phone number: ( )
Fax number: ( )
Date: Page 1 of:
Quote number:

Client information

Project title: Client name:
Reference number: Client number:
Client contact: Client phone number: ( )

Location information

For: Unit:
Site: Service:
Address: City: State: Zip Code:

Application information

Operating conditions

	Max.	Norm.	Min.
Capacity [(gpm (m^3/h)]			
inlet pressure (psig)			
Outlet pressure (psig)			
Differential head [(ft (m)]			
Hydraulic power [(HP (kW)] at designated capacity			
NPSH available [(ft (m)]			

Pumped liquid

Liquid type:

	Rated	Max.	Norm.
Liquid Temperature [(°F (°C)]			
at designated temperature			
Specific gravity			
Vapor pressure (psia)			
Viscosity (cp)			

Liquid ph: Chlorides (ppm):

Service

Hazardous: Corrosion/erosion caused by:
Continuous Flammable:
Intermittent (starts/day): Other:

Pump information

Model information from type key and codes: ----> (Example: CRE 5-10 A-FGJ-A-E-HQQE)
Quantity required:
Minimum required flow: NPSH required at duty point:

Product guide additional information pages

Materials page number: Performance curve page number:
Technical data page number: Motor data page number:

Motor information

HP (kW): Phase: Voltage: Enclosure:

Custom-built pump information (optional):

Additional Information

15. Quotation text

CRE, CRIE, CRNE

Vertical, non-self-priming, multistage, in-line, centrifugal pump for installation in pipe systems and mounting on a foundation.

The pump has the following characteristics:

- impellers and intermediate chambers are made of AISI _____ Stainless steel
- Pump head and base are made of _____
- Power transmission is via cast iron split coupling.
- pipe connections are via _____

The motor is a _____ -phase AC motor.

Technical

Rated flow rate: _____ gpm
Rated head: _____ Feet
Minimum liquid temperature: _____ °F (°C)
Maximum liquid temperature: _____ °F (°C)
Type of shaft seal: _____

Materials

Material, pump housing: _____
Material, shaft: AISI_____ Stainless Steel
Material, impeller: AISI_____ Stainless Steel
Material, sleeve: AISI_____ Stainless Steel
Material, seal metal: AISI_____ Stainless Steel
- rotating seal face: _____
- stationary seat _____
- seal elastomer: _____ Installation

Maximum ambient temperature: _____ °F (°C)
Maximum pressure at stated temperature: _____ PSI/°F (Bar/°C)
Standard, pipe connection: _____
Size, pipe connection: _____
Rated pressure, pipe connection: _____ PSI
Frame size for motor: _____ NEMA

Electrical data

Motor type: _____
Rated power (P2): _____ HP (kW)
Frequency: _____ Hz
Rated voltage: _____ V
Rated current: _____ A
Service factor: _____
Starting current: _____ A
Rated speed: _____ RPM
Full load motor efficiency: _____ %
Insulation class: _____

Additional

Gross weight: _____ Lbs (kW)
Shipping volume: _____
Model: _____

16. Grundfos Product Center

Online search and sizing tool to help you make the right choice.

http://product-selection.grundfos.com

This drop-down menu enables you to set the search function to "Products" or "Literature".

"SIZING" enables you to size a pump based on entered data and selection choices.

"REPLACEMENT" enables you to find a replacement product. Search results will include information on the following:

- the lowest purchase price
- the lowest energy consumption
- the lowest total life cycle cost.

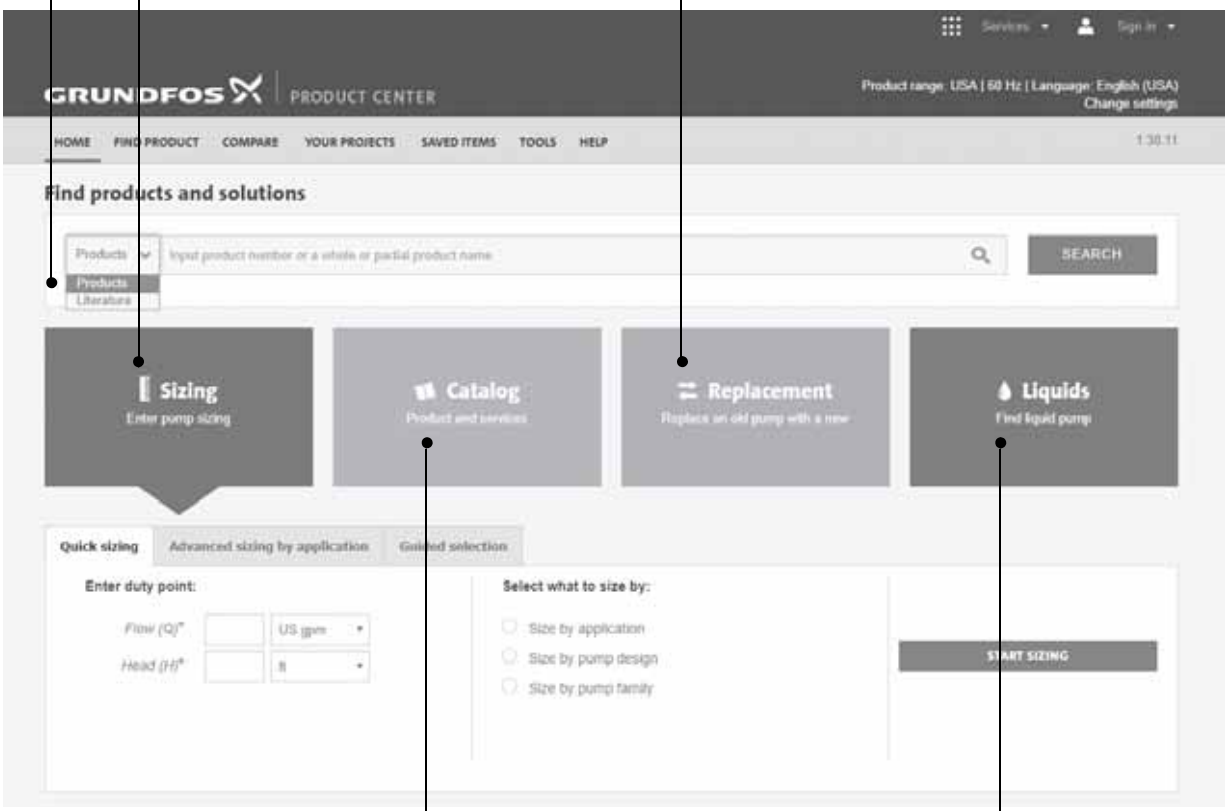

"CATALOGUE" gives you access to the Grundfos product catalogue.

"LIQUIDS" enables you to find pumps designed for aggressive, flammable or other special liquids.

All the information you need in one place

Performance curves, technical specifications, pictures, dimensional drawings, motor curves, wiring diagrams, spare parts, service kits, 3D drawings, documents, system parts. The Product Center displays any recent and saved items - including complete projects - right on the main page.

Downloads

On the product pages, you can download installation and operating instructions, data booklets, service instructions, etc. in PDF format.

Grundfos GO Remote

Mobile solution for professionals on the GO!

Grundfos GO Remote is the mobile tool box for professional users on the go. It is the most comprehensive platform for mobile pump control and pump selection including sizing, replacement and documentation. It offers intuitive, handheld assistance and access to Grundfos online tools, and it saves valuable time for reporting and data collection.

GET IT ON Google play

Available on the App Store

be think innovate

© 2020 Grundfos Holding A/S, all rights reserved.

Trademarks displayed in this material, including but not limited to Grundfos, the Grundfos logo and "be think innovate" are registered trademarks owned by The Grundfos Group. All rights reserved.

98556115 0120

ECM: 1277943

GRUNDFOS Chicago
3905 Enterprise Court
P.O. Box 6620
Aurora, IL 60598-0620
Phone: +1-630-236-5500
Fax: +1-630-236-5511

GRUNDFOS Kansas City
9300 Loiret Boulevard
Lenexa, Kansas 6619
Phone: +1-913-227-3400
Fax: +1-913-227-3500

GRUNDFOS CBS
902 Koomey Road
Brookshire, TX 77423
Phone: +1-281-994-2700
Fax: +1-800-945-4777

www.grundfos.us

Canada
GRUNDFOS Canada
2941 Brighton Road
Phone: +1-905-829-9533
Fax: +1-905-829-9512

www.grundfos.ca

México
GRUNDFOS México
Boulevard TLC No. 15
Parque Industrial Stiva Aeropuerto
Phone: +011-52-81-8144-4000
Fax: +011-52-81-8144-4010

www.grundfos.mx

GRUNDFOS