OPERATOR'S MANUAL & SALES AND ENGINEERING DATA

INCLUDING: SPECIFICATIONS, SERVICE KITS, GENERAL INFORMATION, TROUBLESHOOTING.
INCLUDE MANUALS: AF0860-XX Air Motor (pn 97999-1472), 6694X-XXX Lower Pump End (pn 97999-12) & S-632 General Information Manual (pn 97999-624).

RELEASED: 10-1-10
(REV. 01)

8" AIR MOTOR
10:1 RATIO
6" STROKE

AF0810XXXXXXX-XX-X TWO-BALL PUMP SERIES

400 Series Stainless Steel

READ THIS MANUAL CAREFULLY BEFORE INSTALLING, OPERATING OR SERVICING THIS EQUIPMENT.

It is the responsibility of the employer to place this information in the hands of the operator. Keep for future reference.

SERVICE KITS

- Use only genuine ARO® replacement parts to assure compatible pressure rating and longest service life.
- **637489** for repair of air motor section.
- **637211-XX3** for repair of lower pump end. Refer to the chart on page 2 for description of -XXX options.

SPECIFICATIONS

Model Series (refer to option chart)	AF0810XXXXXXX-XX-X
Pump Type	Air Operated, Two-Ball Double Acting Pump
Ratio	10:1
Air Motor	AF0860-XX
Motor Repair Kit	637489
Motor Diameter	8" (20.3 cm)
Stroke (double acting)	6" (15.2 cm)
Air Inlet (female)	3/4 - 14 N.P.T.F. - 1
Air Exhaust (female)	1-1/4 - 11-1/2 N.P.T.F. - 1
Lower Pump End Series	6694X-XXX
Lower Pump Repair Kit	637211-XX3
Material Inlet (male)	2 - 11-1/2 N.P.T.F. - 1
Material Outlet (female)	1-1/4 - 11-1/2 N.P.T.F. - 1
Weight	102 lbs (46.3 kgs)

PUMP PERFORMANCE

Air Inlet Pressure Range	30 - 120 p.s.i.g. (2.1 - 8.3 bar)
Fluid Pressure Range	300 - 1200 p.s.i.g. (20.7 - 82.8 bar)
Maximum Rec'd Cycles / Minute	70
Displacement In.^{3} Per Cycle	59.8
Volume / Cycle	33.1 oz. (979.6 ml)
Cycles Per Gallon	3.9
Flow @ 70 Cycles / Minute	18.1 g.p.m. (68.6 l.p.m.)
Noise Level @ 60 p.s.i. - 40 c.p.m.	86.8 db(A)①

① The pump sound pressure level has been updated to an Equivalent Continuous Sound Level (LAeq) to meet the intent of ANSI S1.13-1971, CAGI-PNEUROP S5.1 using four microphone locations.

PUMP DATA

MODEL AF0810XXXXXXX-XX-X

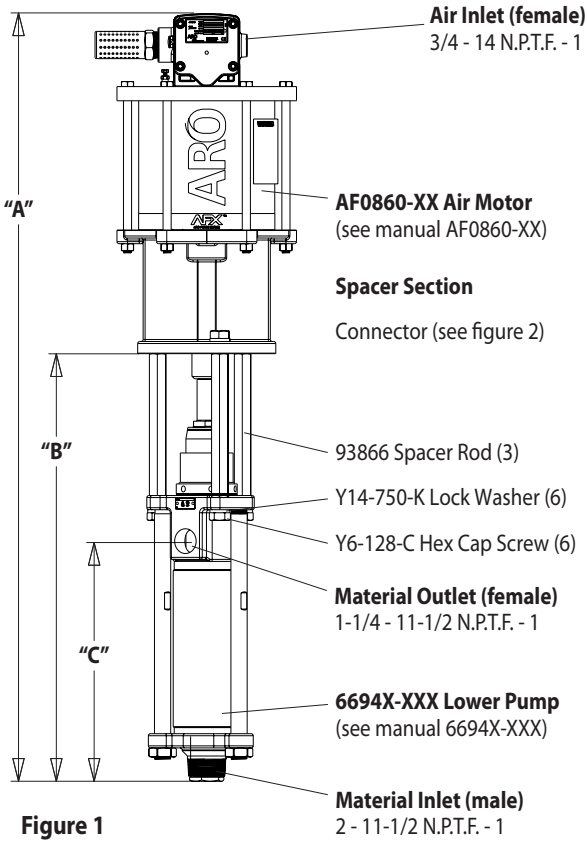

Figure 1

NOTE: Dimensions are shown in inches and (mm) and are supplied for reference only.

"A" (mm)	"B" (mm)	"C" (mm)
47.344" (1202.5)	26.374" (669.9)	14.812" (376.2)
(for -1 model)		
49.429" (1255.5)	26.374" (669.9)	14.812" (376.2)

IMPORTANT

This is one of four documents which support the pump. Replacement copies of these forms are available upon request.

- ☒ **AF0810XXXXXXX-XX-X** Model Operator's Manual (pn 97999-1514)
- ☐ **S-632** General Information - Industrial Piston Pumps (pn 97999-624)
- ☐ **6694X-XXX** Lower Pump End Operator's Manual (pn 97999-12)
- ☐ **AF0860-XX** Air Motor Operator's Manual (pn 97999-1472)

INGERSOLL RAND COMPANY LTD
209 NORTH MAIN STREET – BRYAN, OHIO 43506
(800) 495-0276 • FAX (800) 892-6276
www.ingersollrandproducts.com

© 2010

CCN 15334030

ARO

Ingersoll Rand
Industrial Technologies

PUMP OPTION DESCRIPTION CHART

	Pump Model	Lower Pump End	Lower End Repair Kit
	AF0810F11XXXX-X Air Motor Option Plunger Type Spring Type Lower Packing Material Upper Packing Material Wetted Material	6694X-XXX PlungerType Spring Type Packing Material Wetted Material	63721X-XX3 Spring Type Packing Material
Wetted Material			
300 Series Stainless Steel	C	66942-	N/A
400 Series Stainless Steel	F	66941-	N/A
300 Series Stainless Steel with Alternate Seat Material	G	66942-	N/A
400 Series Stainless Steel with Alternate Seat Material	J	66941-	N/A
Packing Material			
UHMW-PE (upper) UHMW-PE (lower)	FF	C	C
Carbon Graphite filled PTFE (upper) Carbon Graphite filled PTFE (lower)	CC	K	K
Mineral filled PTFE (upper) Mineral filled PTFE (lower)	KK	L	L
UHMW-PE / Mineral filled PTFE staggered (upper) UHMW-PE (lower)	GF	P	P
Mineral filled PTFE / UHMW-PE staggered (upper) Mineral filled PTFE (lower)	RK	R	R
Spring Type			
No Spring	1	3	3
Wave Spring	3	6	6
No Spring with Alternate Seat Material	1	C	3
Wave Spring with Alternate Seat Material	3	D	6
Plunger Type			
Hardened Stainless Steel w/ hard chrome plating	6	D	3
Stainless Steel w/ hard chrome plating	5	F	3
Air Motor Option			
No Option		N/A	N/A
Intergrated ball valve regulator	1	N/A	N/A

DIMENSIONS

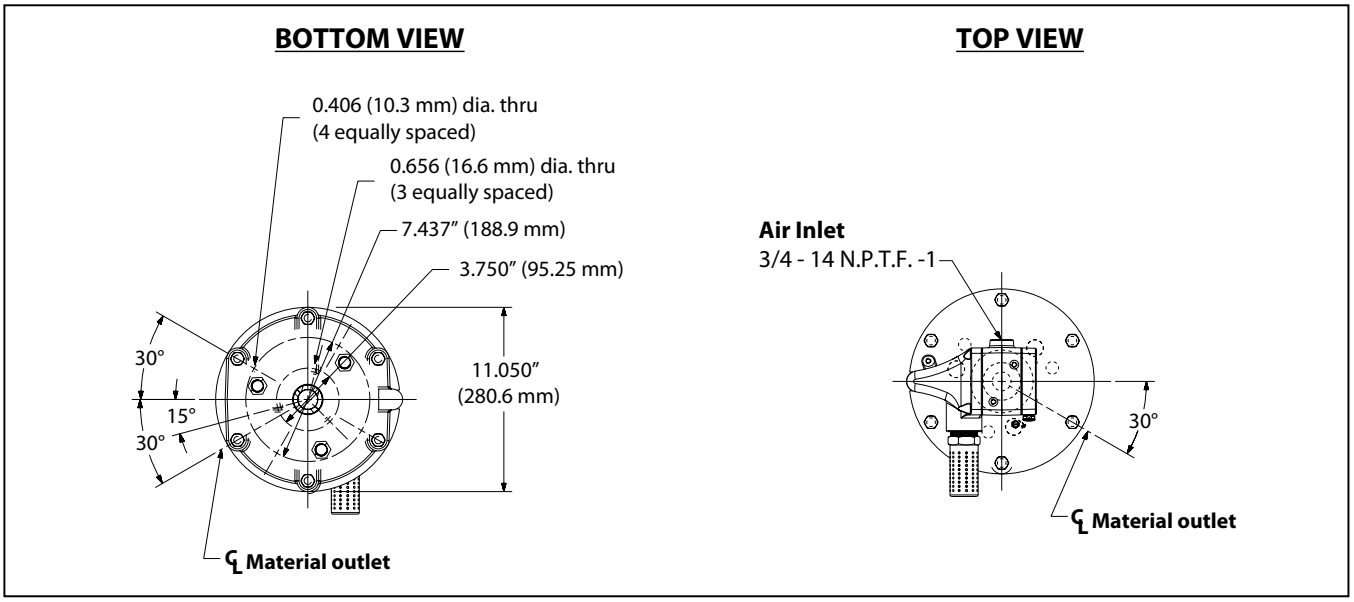

GENERAL DESCRIPTION

The two-ball pumps are primarily designed for the high volume transfer of light and medium viscosity fluids. Stainless steel construction offers compatibility with a wide range of fluids. The lower pump is designed for easy priming and the double acting feature is standard in all ARO industrial pumps. Material is delivered to the pump discharge outlet on both the up and down stroke.
The motor is connected to the lower pump end by a spacer section. This allows for lubrication of the upper packing gland and prevents motor contamination because of normal wear and eventual leakage through the material packing gland. Be sure the solvent cup is adequately filled with lubricant to protect the upper packings and insure longest service life.

⚠WARNING HAZARDOUS PRESSURE. Do not exceed maximum operating pressure of 1200 p.s.i. (82.8 bar) at 120 p.s.i. (8.3 bar) inlet air pressure.

Pump Ratio X Inlet Pressure to Pump Motor	=	Maximum Pump Fluid Pressure

Pump ratio is an expression of the relationship between the pump motor area and the lower pump end area. EXAMPLE: When 150 p.s.i. (10.3 bar) inlet pressure is supplied to the motor of a 4:1 ratio pump, it will develop a maximum of 600 p.s.i. (41.4 bar) fluid pressure (at no flow) - as the fluid control is opened, the flow rate will increase as the motor cycle rate increases to keep up with the demand.

⚠WARNING Refer to general information sheet for additional safety precautions and important information.

NOTICE: Thermal expansion can occur when the fluid in the material lines is exposed to elevated temperatures. Example: Material lines located in a non-insulated roof area can warm due to sunlight. Install a pressure relief valve in the pumping system.

Replacement warning label (pn 92325) is available upon request.

TROUBLE SHOOTING

Pump problems can occur in either the air motor section or the lower pump end section. Use these basic guidelines to help determine which section is affected.

Pump will not cycle.

- Be certain to first check for non-pump problems including kinked, restrictive or plugged inlet / outlet hose or dispensing device. Depressurize the pump system and clean out any obstructions in the inlet / outlet material lines.
- Refer to the motor manual for trouble shooting if the pump does not cycle and / or air leaks from the air motor.
- Damaged motor. Service the motor.

Pump cycles but does not deliver material.

- Refer to the lower pump end manual for further trouble shooting.

PUMP CONNECTION - UPPER / LOWER

NOTE: All threads are right hand.

1. Lay the pump assembly on a work bench.
2. Remove the three (Y6-128-C) cap screws and (Y14-750-K) lock washers from the three spacer rods (see figure 1).
3. Pull the air motor from the lower pump end until the motor piston rod is in the "down" position and the lower pump end rod is in the "up" position.
4. Remove the three spacer rods by removing the three (Y6-128-C) cap screws and (Y14-750-K) lock washers.
5. Using e-ring pliers, slide the "e" ring up far enough to allow the sleeve to move upward and release the two connectors (see figure 2).

PUMP CONNECTION DETAIL

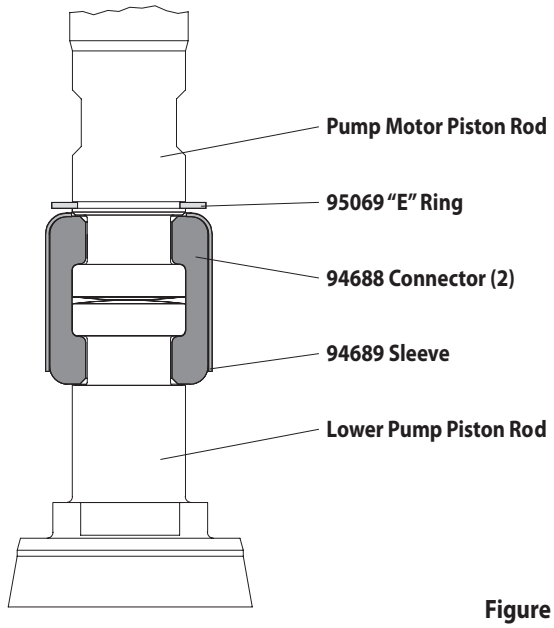

Figure 2

REASSEMBLY

1. Align the pump motor with the lower pump end. Position the air inlet of the motor 120° from the material outlet.
2. Install the two connectors (94688) and retain with the sleeve (94689). Slide the "e" ring (95069) back into position.
3. Assemble the three spacer rods (93866) to the lower pump and secure using three (Y14-750-K) lock washers and (Y6-128-C) cap screws.
4. Reinstall the spacer rods to the pump motor.
5. Bring the motor and lower pump together and retain with three (Y14-750-K) lock washers and (Y6-128-C) cap screws.

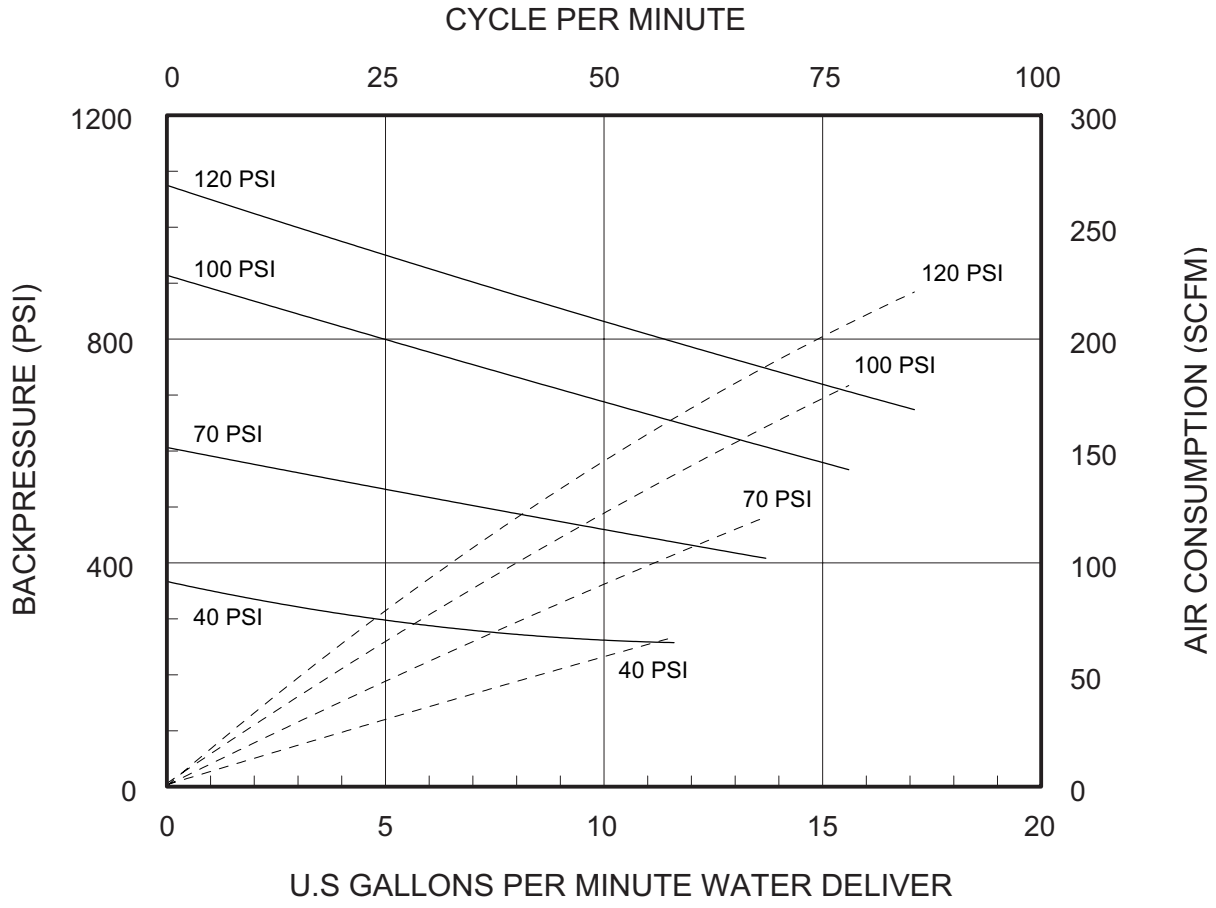
CYCLE PER MINUTE
0
25
50
75
100
1200
800
400
0
300
250
200
150
100
50
0
120 PSI
100 PSI
70 PSI
40 PSI
120 PSI
100 PSI
70 PSI
40 PSI
BACKPRESSURE (PSI)
AIR CONSUMPTION (SCFM)
0
5
10
15
20
U.S GALLONS PER MINUTE WATER DELIVER

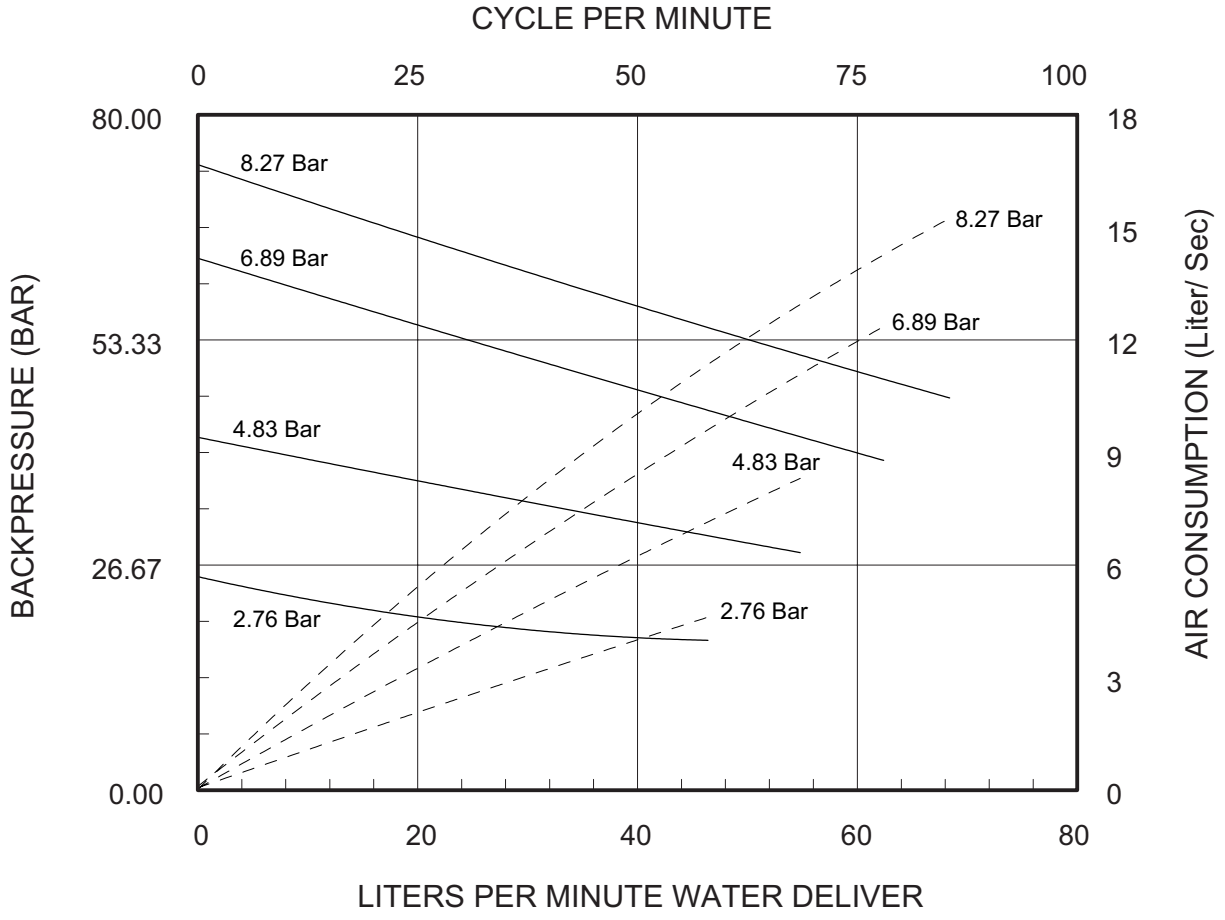
CYCLE PER MINUTE
0
25
50
75
100
80.00
53.33
26.67
0.00
18
15
12
9
6
3
0
8.27 Bar
6.89 Bar
4.83 Bar
2.76 Bar
8.27 Bar
6.89 Bar
4.83 Bar
2.76 Bar
BACKPRESSURE (BAR)
AIR CONSUMPTION (Liter/ Sec)
0
20
40
60
80
LITERS PER MINUTE WATER DELIVER