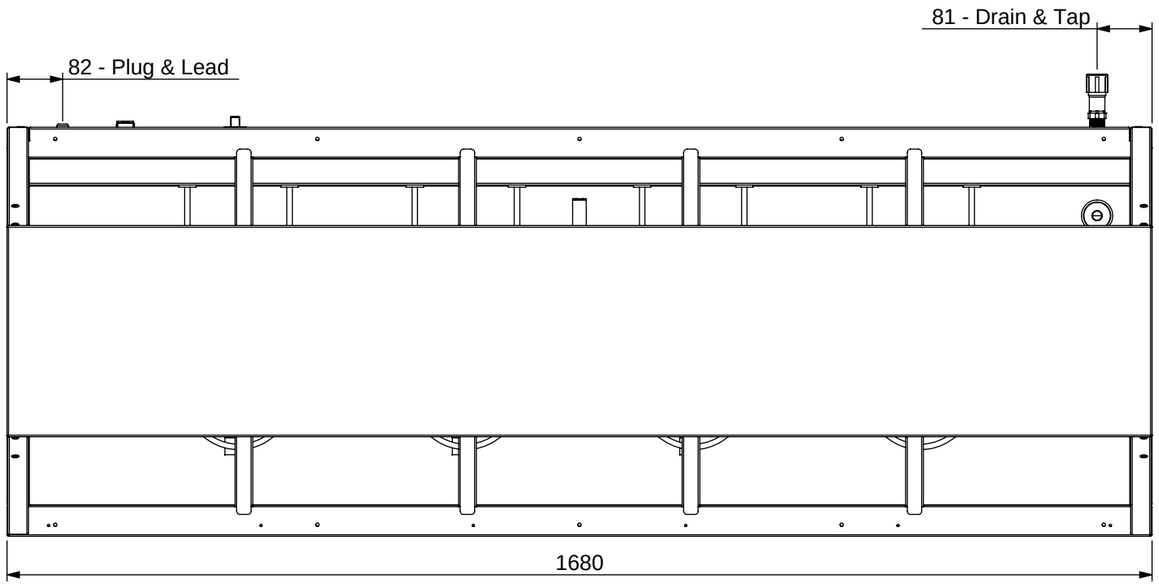

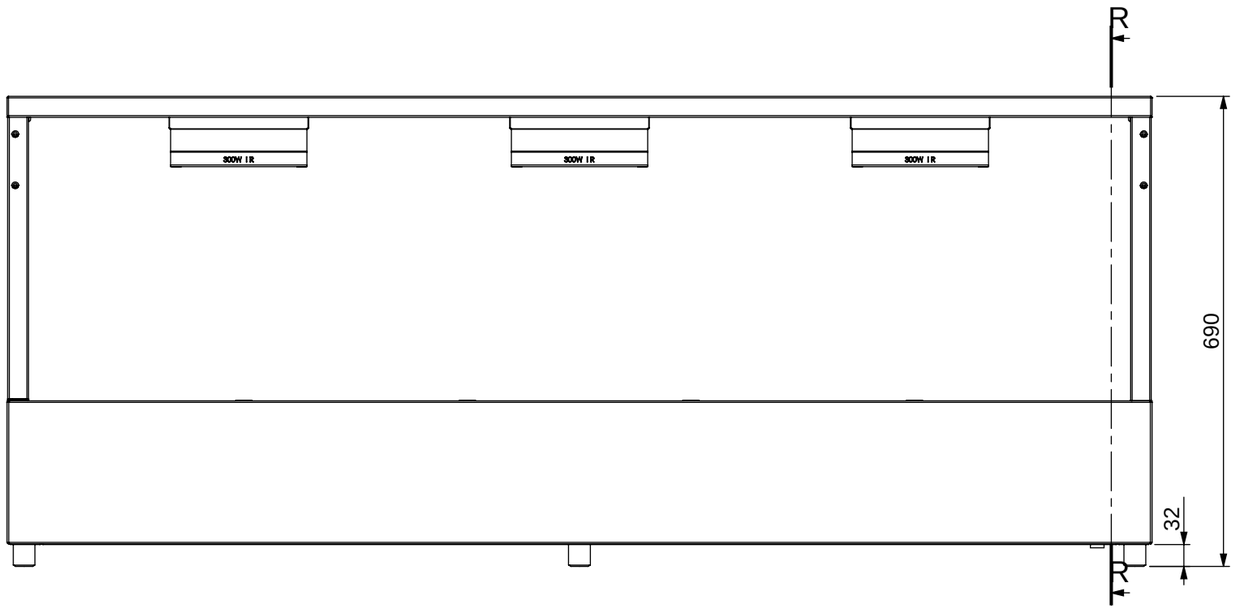

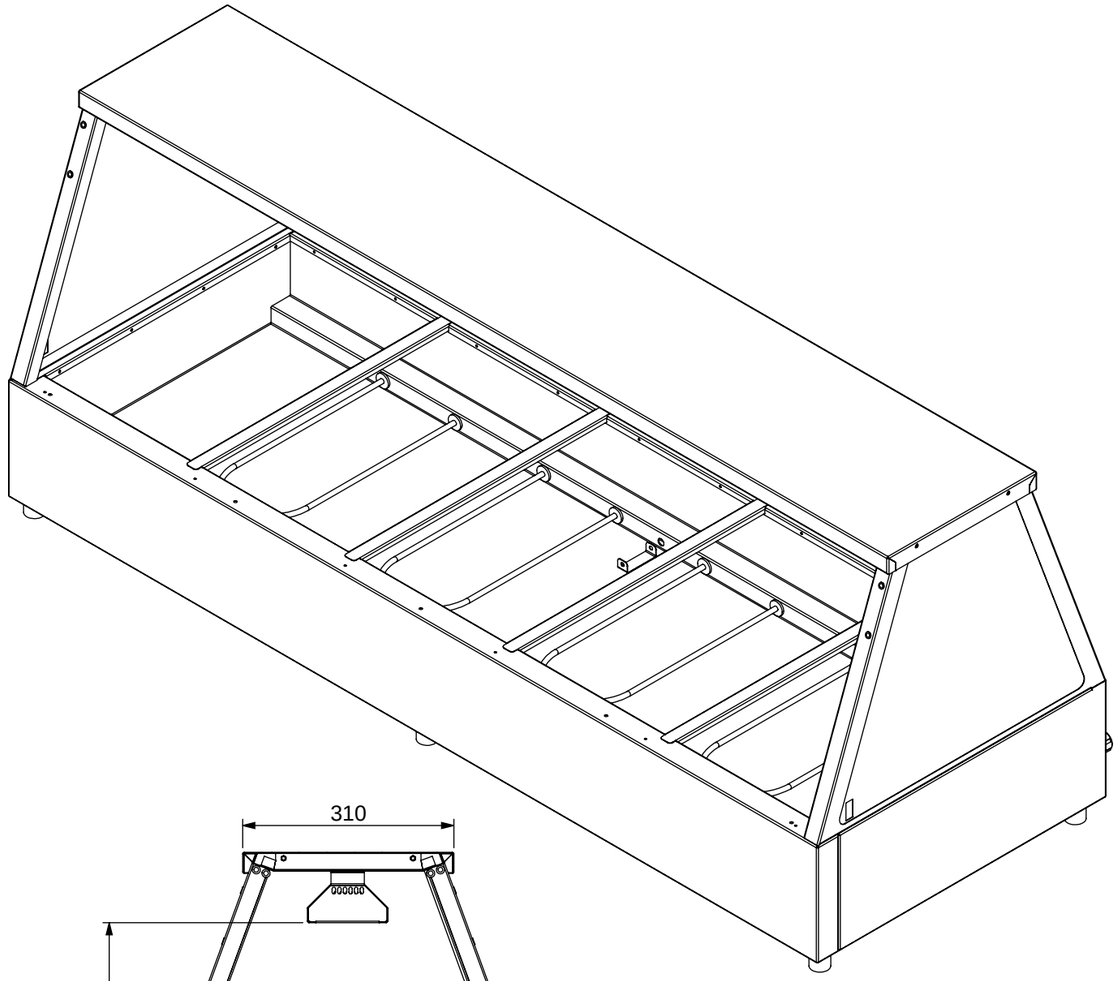

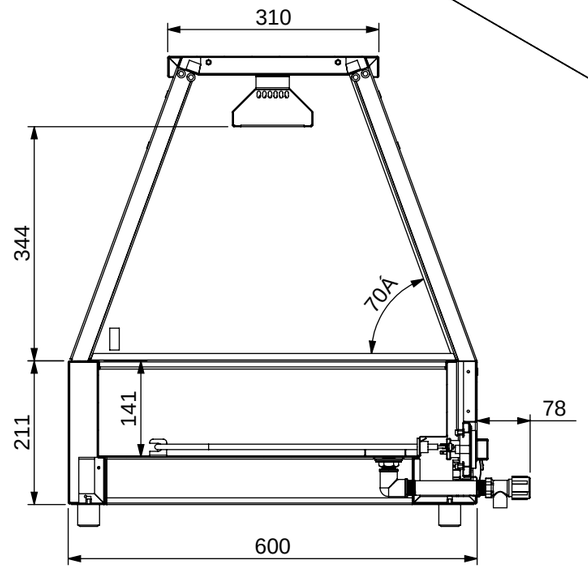

SECTION R-R

Product Details

Electrical Connection	: 15 Amp Plug & Lead (supplied)
Electrical Rating	: 240v, 13.75amps, 3300w,
	: 4 elements @ 600w
	: 3 Woodson Heat Lamp Unit @ 300w
Waste	: 13mm with 19mm drain
	and 1/2" BSP mini cistern cock
Unit Controls	: Switch for main power and heat lamp
	: Knob for thermostat with dial thermometer

STODDART
MANUFACTURING
TOM STODDART Pty Ltd ACN 009 690 251
215 Jackson Rd Sunnybank Hills Qld 4109
PO Box 420 Sunnybank Qld 4109
Phone (617) 3344 2444 Fax (617) 3345 6403
Email sunnybank@stoddart.com.au
Quality in stainless steel

	NAME	SIGNATURE	DATE	UNLESS OTHERWISE SPECIFIED: DIMENSIONS ARE IN MILLIMETERS
DRAWN	N Wooler		24/07/2008	
APPV'D				MATERIAL:
Weight: Surface Area:				THICKNESS: FINISH:

PART No: SP-WHFS25SS B1
DESCRIPTION: Self Serve
DWG No: SP-WHFS25SS-d01 B1
Dwg. Issue 1

DO NOT SCALE DRAWING

This drawing remains the property of Tom Stoddart Pty Ltd & cannot be reproduced without prior permission.

A3 | Sheet 1 of 11

File Location: F:\08_Food Service Equipment\03_Engineering - FSE\01_Stoddart Standard Products\Woodson\SP-WHFS25,WHFC25,WHFS25SS 5 Bay Hot Food Display\01_Solidworks\