Product Details

Electrical Connection : Supply single phase
: 240v, 10amps, 2400w, 10amp plug & lead supplied
: 1 element @ 2400w (240V)
Unit Controls : Knob for 285deg thermostat with indicator light
Plate size : 523 x 337 x 8

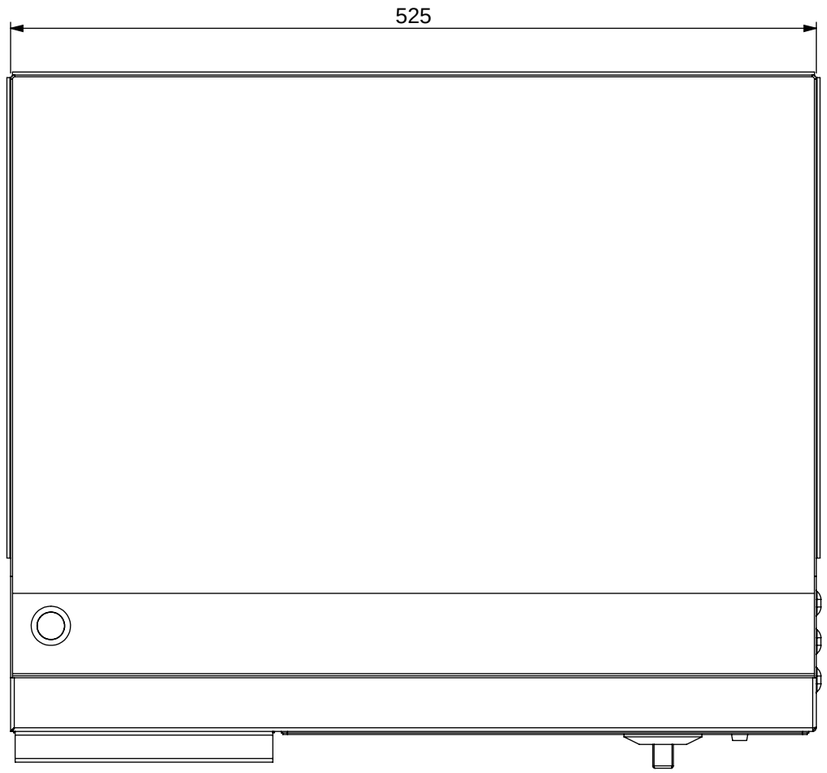

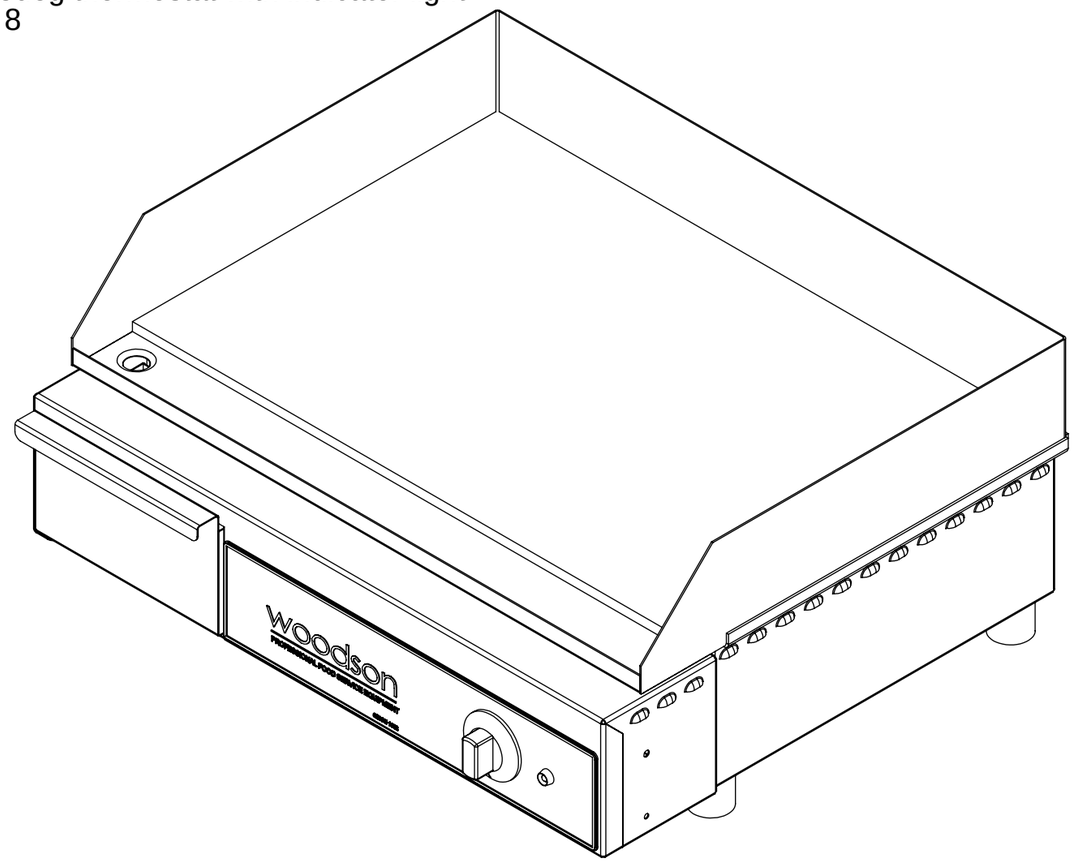

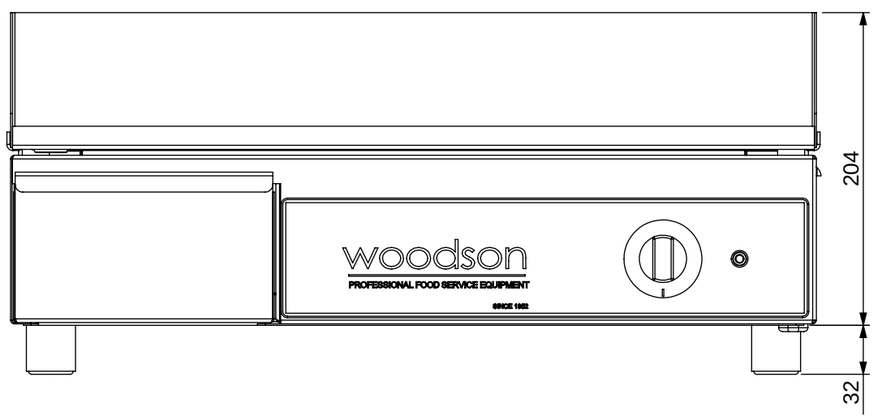

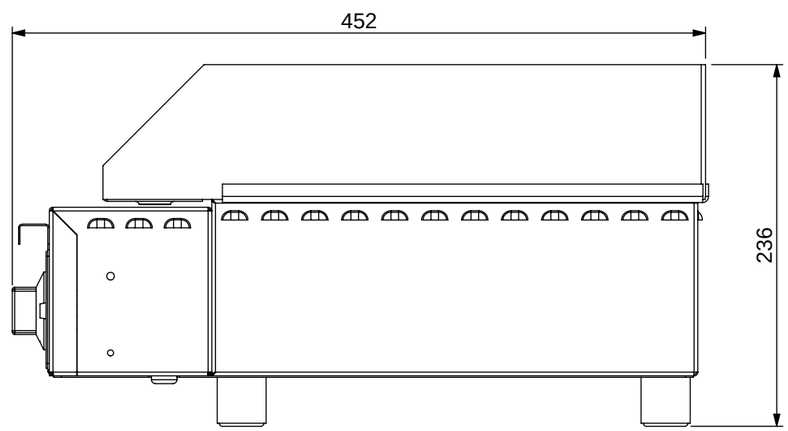

STODDART
MANUFACTURING
TOM STODDART Pty Ltd
ACN 009 690 251
www.stoddart.com.au

	NAME	SIGNATURE	DATE	UNLESS OTHERWISE SPECIFIED: DIMENSIONS ARE IN MILLIMETERS
DRAWN	N Wooler		15/03/2006	
APPV'D				MATERIAL:
Weight: 10117.43 kg				THICKNESS:
Surface Area: 2712056.91 M2				FINISH:
DO NOT SCALE DRAWING				

PART No: **WGDA50-A001**

DESCRIPTION: Assembly

DWG No: WGDA50-D001

Dwg. Issue 1

This drawing remains the property of Tom Stoddart Pty Ltd & cannot be reproduced without prior permission.

A3

File Location: F:\08_Food Service Equipment\03_Engineering - FSE\01_Stoddart Standard Products\Woodson\WGDA50 Griddle\01_Solidworks\