Product Details

Electrical Connection	: 15 Amp Plug & Lead (supplied)
Electrical Rating	: 240v, 2400w,
	: 4 elements @ 600w
Waste	: 13mm with 19mm drain and 1/2" BSP mini cistern cock
Unit Controls	: Switch for main power
	: Thermostat with dial thermometer

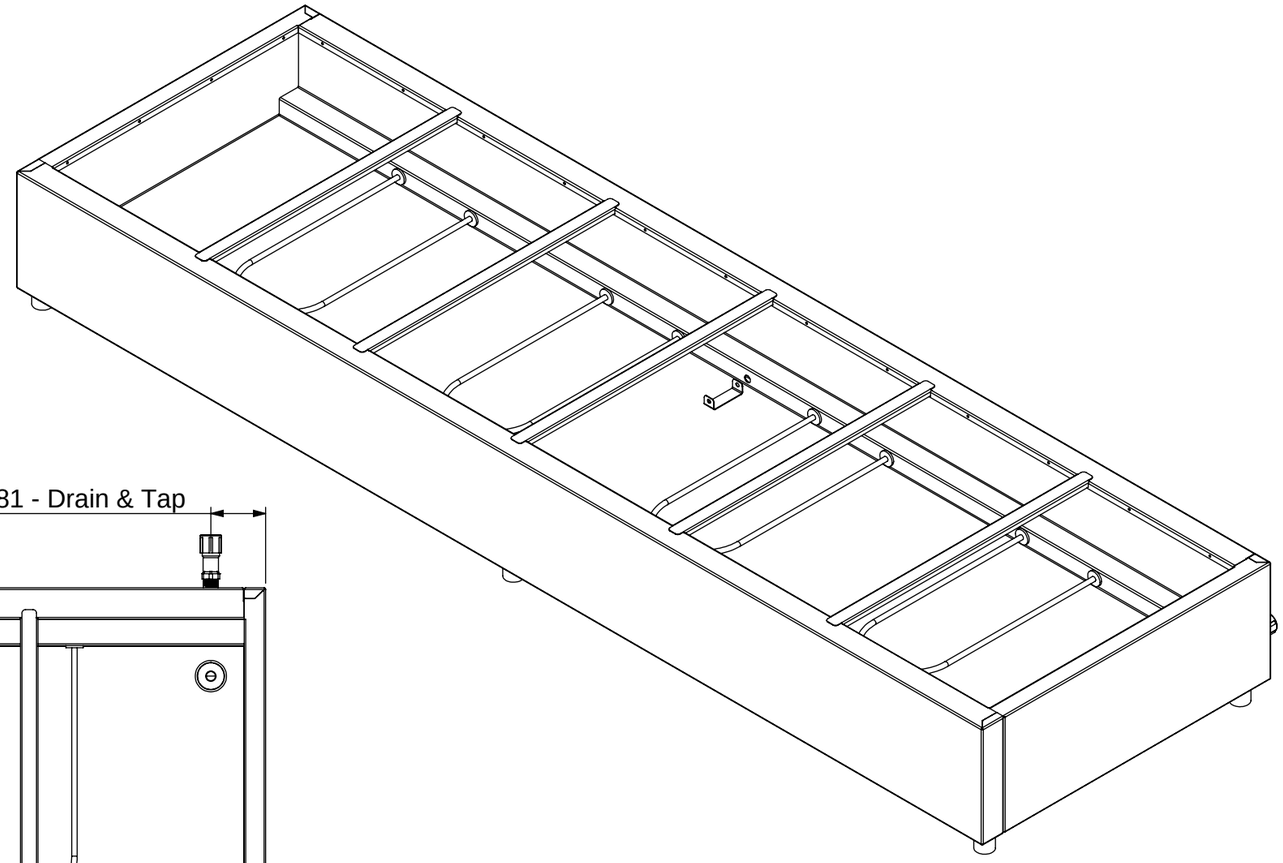

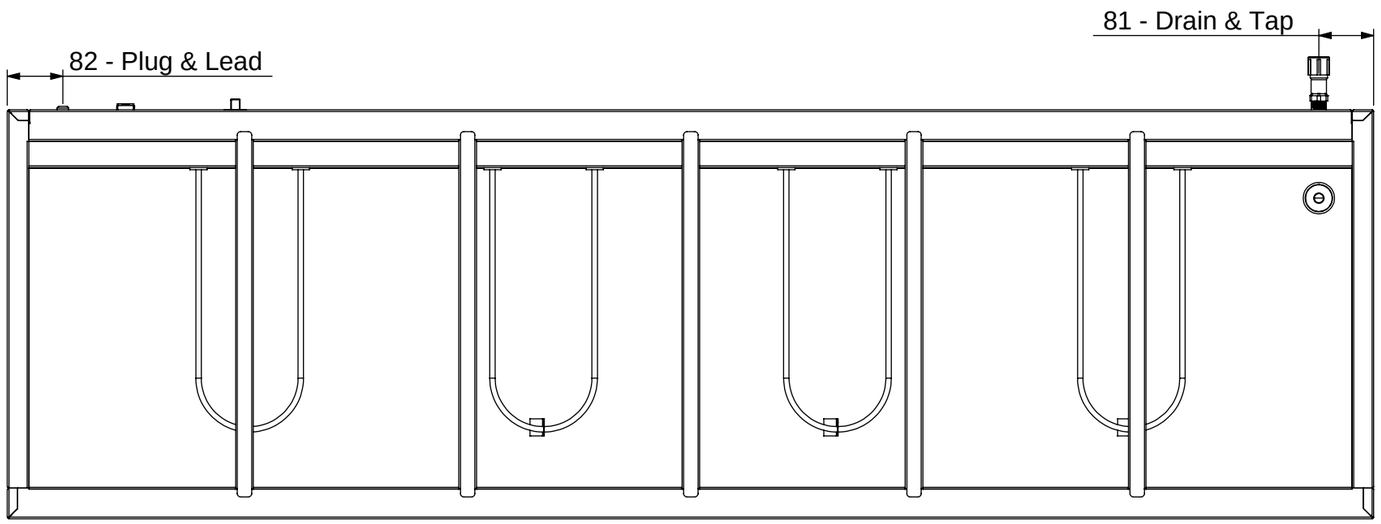

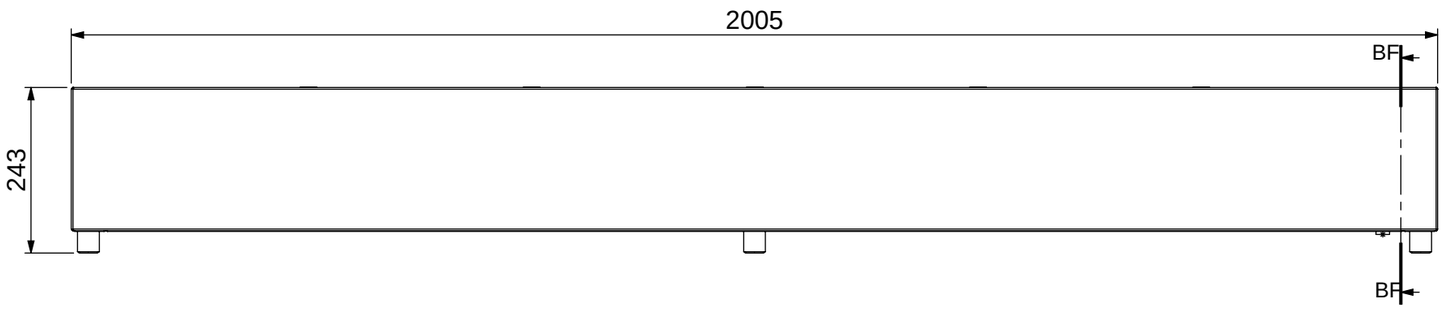

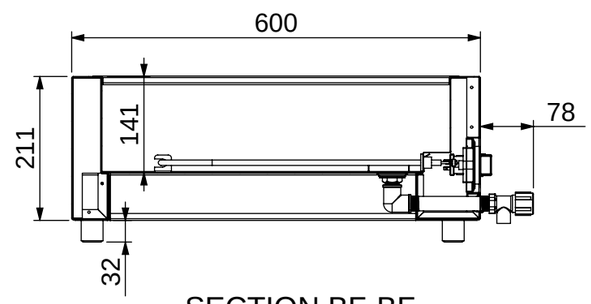

SECTION BF-BF

STODDART
MANUFACTURING
TOM STODDART Pty Ltd
ACN 009 690 251
www.stoddart.com.au

	NAME	SIGNATURE	DATE	UNLESS OTHERWISE SPECIFIED: DIMENSIONS ARE IN MILLIMETERS
DRAWN	N Wooler		3/08/2004	
APPV'D				MATERIAL:
Weight:				THICKNESS:
Surface Area:				FINISH:
DO NOT SCALE DRAWING				

PART No: **WBMA26-A001**

DESCRIPTION:

DWG No: WBMA26-D001

Dwg. Issue 1

This drawing remains the property of Tom Stoddart Pty Ltd & cannot be reproduced without prior permission.

A3

File Location: F:\08_Food Service Equipment\03_Engineering - FSE\01_Stoddart Standard Products\Woodson\WBMA2x Large Bain Marie\01_Solidworks\WBMA26\