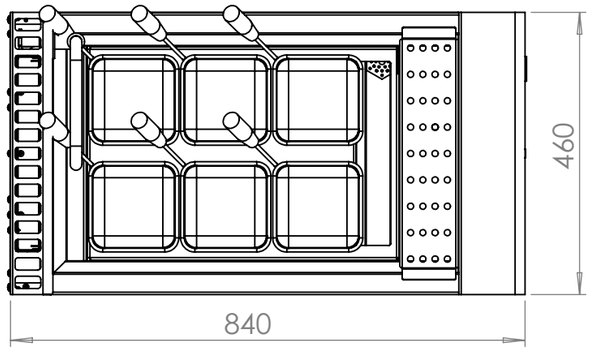

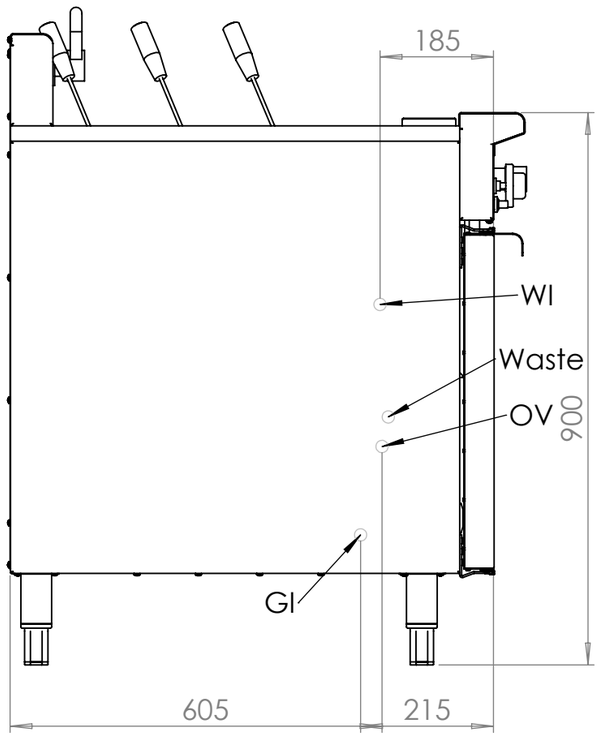

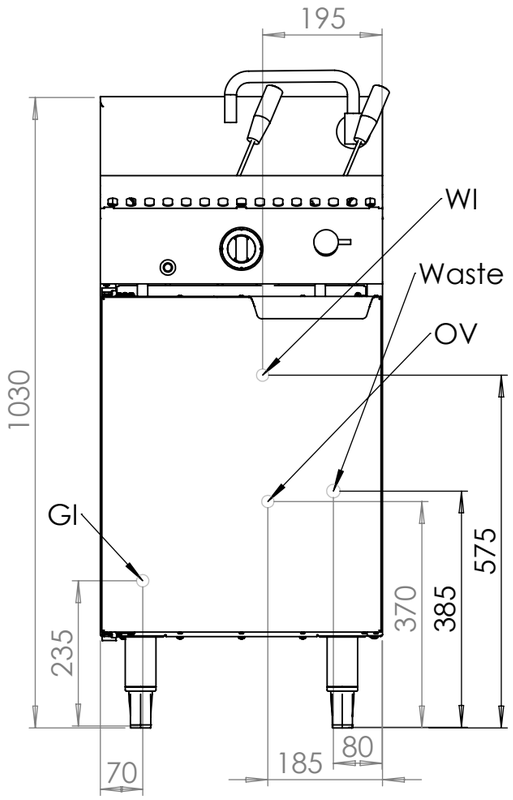

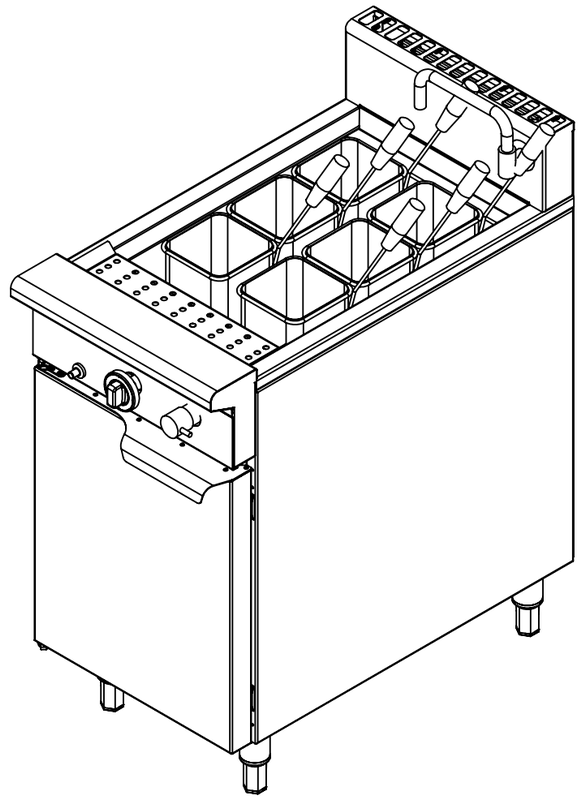

NOTE: GI = Gas Inlet 3/4" BSP Male
WI= Water inlet 12mm Copper pipe
OV= Overflow flexi hose 1" dia
Gas Consumption: NG=58MJ/h
LPG=50MJ/h

UNLESS OTHERWISE SPECIFIED:
1.DIMENSIONS ARE IN MILLIMETRES
2.TOLERANCES:
LINEAR: +/- 1mm
ANGULAR: +/- 0.30°
3.BEND RADII 2.5mm. ALL BENDS AT 90°

SURFACE FINISH:
1. NATURAL (LEAVE FILM INTACT FOR DELIVERY).
2. NO BLEMISHES OR SCRATCHES ON BASE METAL.
3. REMOVE ALL BURRS AND SHARP EDGES.

DO NOT SCALE DRAWING

REVISION

B & S Commercial Kitchens
57 Plateau Road, ReservoirVictoria, 3073
Tel.: (03) 9469 4754 / Fax: 9469 4504

	NAME	SIGNATURE	DATE
DRAWN	A.J		8.6.2016
UPT'D	VV		17.7.2017
APPV'D			
MFG			
Q.A			

MATERIAL:

WEIGHT: -

TITLE:

Verro Noodle Cooker (VNC-6)-Weldon

DWG NO.

VPC-6

A3

SCALE:1:10

SHEET 1 OF 1