XEPA-0523-EXRN

Project
Item
Quantity
Date

INDUSTRY KITCHENS
www.industrykitchens.com.au 1800 611 058

Model
SPEED-X™

Combi speed oven	Electric
5 or 10 trays GN 2/3 (COMBI)	Hinge on the left side
1 tray GN 2/3 (SPEED)	16" Touch control panel
Voltage: 380-415VV 3N~ / 220-240V 3~	

Description

SPEED-X™ is the first oven to be both a combi oven and a speed oven complete with automatic washing. SPEED-X™ has a capacity of 10 GN2/3 trays with 35 mm pitch or 5 GN2/3 trays with 70 mm pitch in combi mode and a position dedicated for the SPEED.Plate for cooking up to 4 items simultaneously in speed mode. The revolutionary HYPER.Speed technology combines combi cooking with microwaves and significantly reduces the cooking time of sandwiches and precooked dishes compared to traditional speed-ovens. The automatic washing with integrated detergent tank simplifies cleaning operations, allowing the speed cooking of raw foods such as vegetables, meat, fish and much more. The AISI 316L stainless steel cooking chamber combined with the RO.Care water filtration system allows you to connect SPEED-X™ directly to the water network without the need for external filtering systems even in the presence of very hard water or with a high level of chlorides.

Standard cooking features

Manual cooking

- **Cooking steps:** up to 9
- **Temperature:** 30 °C - 260 °C
- **Preheating:** up to 260 °C
- **Microwave:** setting the percentage of microwaves in increments of 10%
- **CLIMA.Control:** humidity setting from 10% to 100% and continuous measurement of the actual humidity present in the cooking chamber
- **Fan speed:** 5 continuous speeds and 5 pulsed speeds
- **Storable programs:** 1000+

Automatic cooking

- **CHEFUNOX & SPEEDUNOX:** choose something to cook from the built-in combi or combi-speed library, the oven automatically sets all the parameters
- **MULTI.Time:** manages and monitor up to 10 cooking processes at the same time
- **MULTI.Speed:** manages and monitors up to 4 speed cooking processes at the same time

Key features

- Stainless steel structure
- All-stainless steel slam shut door with integrated 16" capacitive control panel
- Cooking chamber in AISI 316L stainless steel for maximum corrosion resistance
- 2 overlapping reversing fans and symmetrical linear elements with high power output
- Insertion of microwaves into the cooking chamber in the direction perpendicular to the baking tray with integrated stirring effect
- **ROTOR.Klean™:** automatic washing system
- Integrated DET&Rinse™ detergent container
- **RO.Care:** integrated filtering system that eliminates substances that contribute to the formation of limescale from the water: up to 1300L of filtered water with a cartridge. Integrated water hardness measurement sensor automatically indicating filter depletion.
- **Digital.ID™** Operating System
- Built-in microphone with the capability of voice control and call function
- Built-in Wi-Fi internet connection
- HACCP Data Download

XEPA-0523-EXRN

Advanced and automatic cooking features

Unox Intelligent Performance

- **SMART.Standby:** recognizes the absence of food in the cooking chamber and automatically sets the standby mode with low consumption
- **ADAPTIVE.Cooking™:** automatically adjusts the cooking parameters according to the food load to ensure repeatable results
- **CLIMALUX™:** continuous measurement and regulation of the real humidity present in the cooking chamber
- **SMART.Preheating:** automatically sets the temperature and duration of the preheating according to the previous modes of use
- **AUTO.Soft:** manages the thermal ascent during cooking to make it more delicate
- **SENSE.Klean:** estimates the degree of dirt of the oven and suggests the most suitable automatic washing

Unox Intensive Cooking

- **HYPER.Speed:** combines microwave, steam and convection to reduce cooking times
- **DRY.Maxi™:** quickly removes moisture from the cooking chamber
- **STEAM.Maxi™:** produces saturated steam
- **AIR.Maxi™:** multi-fan system with reversing

Data Driven Cooking

- Check and monitor in real-time the operating conditions of your ovens, create and share new recipes. Artificial intelligence transforms consumption data into useful information and allows you to increase daily profits

DIGITAL ID

Digital.ID™

- Create your Digital.ID™ account and log in to your SPEED-X™ oven connected to the internet: memorized your cooking programs, the configuration of your home page, and all the customisations of your oven directly on the cloud. The account stays in constant sync with the most recent changes, also allowing you to edit them directly from your smartphone. You can log in to your account from any SPEED-X™ oven connected to the internet and immediately have access to your settings.

Standard digital services

- Digital.ID™ App
- DIGITAL.Training
- Live technical assistance
- Data Driven Cooking app & webapp

Premium digital services

- HEY.Unox - Voice control
- COOKING.Concierge (30min/month)
- Access to the DDC Enterprise plan*
- LONG.Life 5 warranty extension*

*visit unox.com for more information

XEPA-0523-EXRN

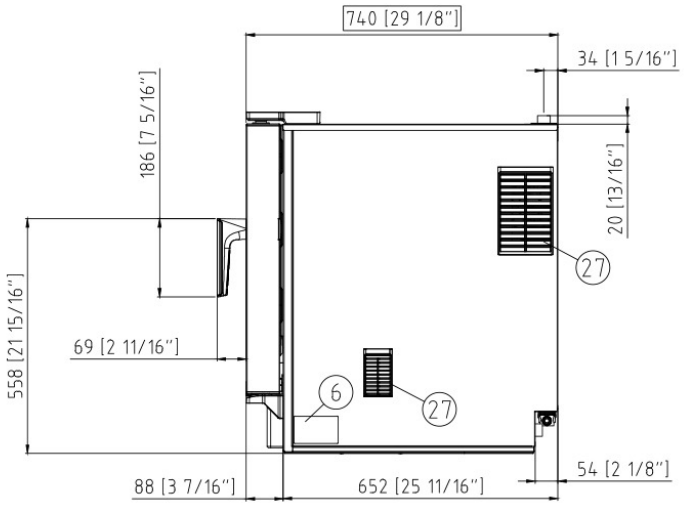

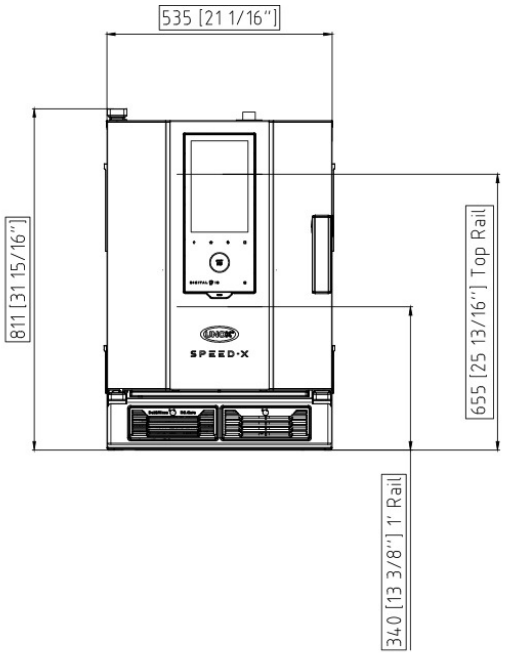

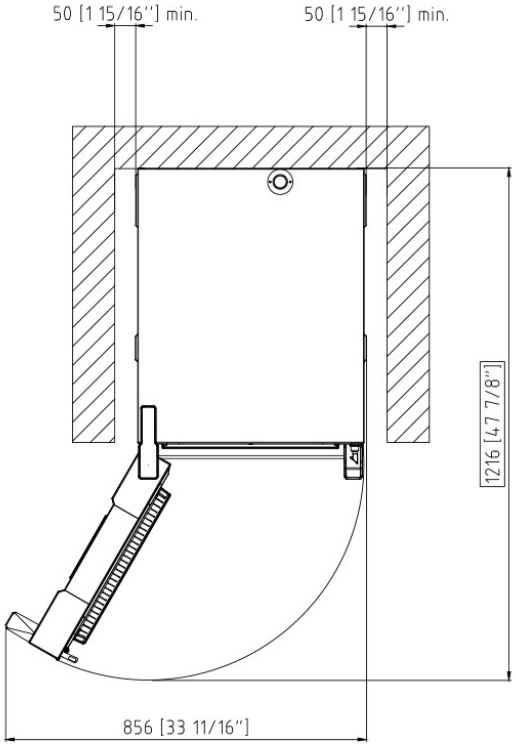

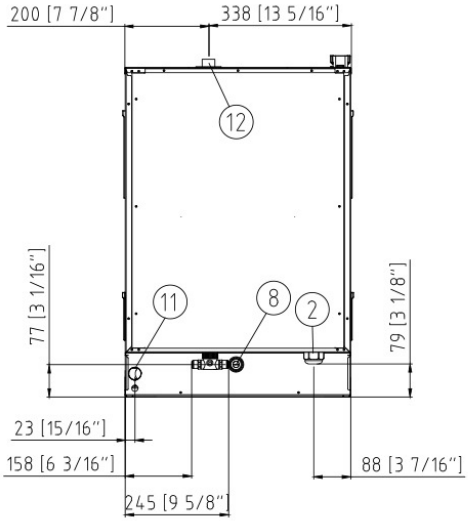

Dimensions and weight

Width	535 mm
Depth	740 mm
Height	811 mm
Net weight	107 kg
Tray pitch	70 mm (5 GN 2/3) - 35 mm (10 GN 2/3)

Connection positions

2	Terminal board power supply
6	Technical data plate
8	3/4" female NPT water inlet
11	Chamber drain pipe
12	Hot fumes exhaust chimney
27	Cooling air outlet

XEPA-0523-EXRN

Electrical power supply

STANDARD	
Voltage	380-415V V
Phase	~3PH+N+PE
Frequency	50 Hz
Total power	9.5 kW
Max Amp draw	15.5 A
Required breaker size	16 A
Power cable requirements*	5G x 2,5 mm^2
Plug	NOT INCLUDED
OPTION A	
Voltage	220-240 V
Phase	~3PH+PE
Frequency	50 Hz
Total power	9.5 kW
Max Amp draw	21 A
Required breaker size	25 A
Power cable requirements*	4G x 2,5 mm^2
Plug	NOT INCLUDED

*Recommended size - observe local ordinance.

Water Supply

USING A WATER SUPPLY THAT DOES NOT MEET UNOX'S MINIMUM WATER QUALITY STANDARDS WILL VOID ANY WARRANTY.
It is the responsibility of the purchaser to ensure that the incoming water supply is compliant with the listed specifications through adequate treatment measures.

Line pressure:	Drinking water inlet: 3/4" NPT*, line pressure: 22 to 87 psi; 1.5 to 6 Bar (29 psi; 2 Bar recommended)

Inlet water specifications	
Free chlorine	≤ 0.5 ppm
Chloramine	≤ 0.1 ppm
pH	7 - 8.5
Electrical conductivity	≤ 1500 µS/cm
Total hardness (TH)	≤ 30° dH (534 ppm)
Chlorides	≤ 250 ppm

*this value refers to daily steam cooking of 1- 2 hours. In any case, if with a total hardness ≤ 8°dH there is still production of limescale, it is mandatory to treat the water in order to avoid limescale production. We recommend water treatment systems based on ion exchange resins. Water treatment systems based on polyphosphates are not allowed. Total water hardness can be measured using the KSTR1082A kit with equivalent tools.

Accessories

- **DET&Rinse™ ULTRA:** cleaning and rinse agents to combine maximum cleanliness with minimum consumption and long life for your oven
- **Stand:** the multifunctional support ideal for storing trays safely and placing your oven at the perfect height to work
- **Cooking Essentials:** special trays
- **Speed Essentials:** special trays and spatulas for SPEED mode

Installation requirements

Installations must comply with all local electrical systems, particularly as for minimum wire gauge required for field connection, hydraulic and ventilation supply. Exhaust and fume analysis must be performed in case of gas ovens.

Register to DDC Service to access data and product specifications.
www.ddc.unox.com