Cutting Method		
Manual	Laser	TruPunch

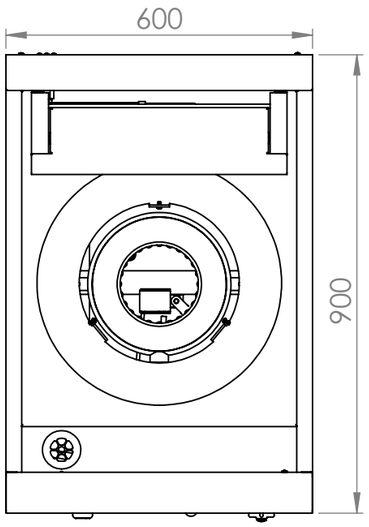

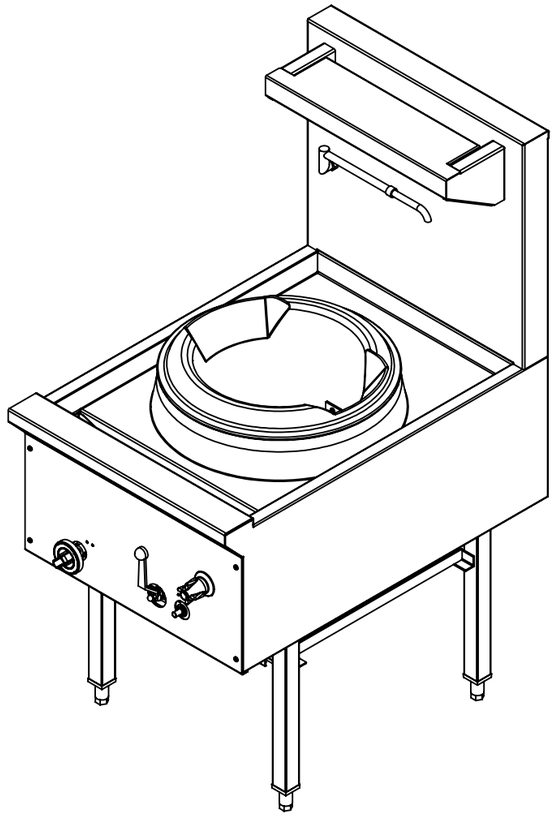

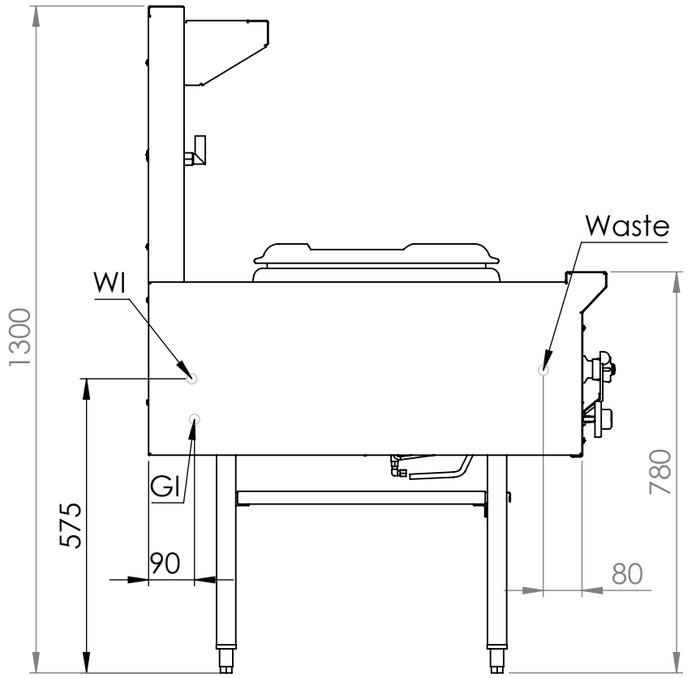

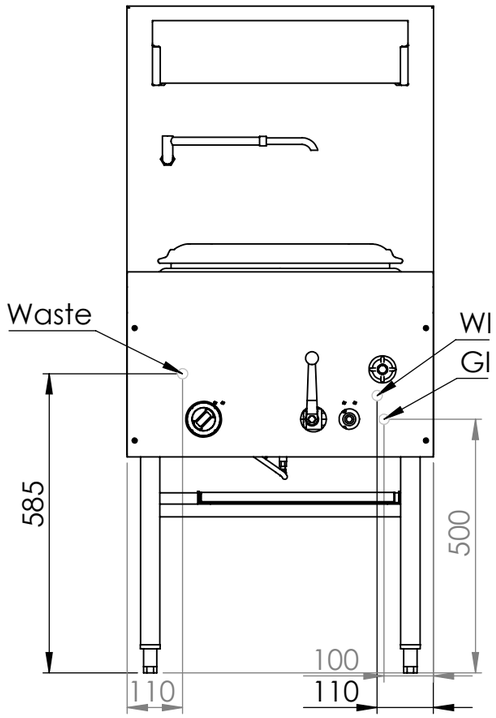

NOTE: GI= Gas inlet 3/4" BSP male
Gas Consumption: NG= 105MJ/h; LPG=75MJ/h (Chimney Burner)
NG=110MJ/h; LPG=90MJ/h (Duck Burner)

UNLESS OTHERWISE SPECIFIED:
1.DIMENSIONS ARE IN MILLIMETERS
2.TOLERANCES:
LINEAR: +/- 1mm
ANGULAR: +/- 0.30°
3.BEND RADII 2mm. ALL BENDS AT 90°.

SURFACE FINISH:
1. NATURAL (LEAVE FILM INTACT FOR DELIVERY).
2. NO BLEMISHES OR SCRATCHES ON BASE METAL.
3. REMOVE ALL BURRS AND SHARP EDGES.

DO NOT SCALE DRAWING

REVISION:

B & S Commercial Kitchens
57 Plateau Road, ReservoirVictoria, 3073
Tel.: (03) 9469 4754 / Fax: 9469 4504

	NAME	SIGNATURE	DATE
DRAWN	S.K		13/3/2018
CHK'D			
APPV'D			
MFG			
Q.A			

MATERIAL:

WEIGHT: -

TITLE: UFWWK-1_NG/CB

DWG NO. UFWWK-1 Drawing

A3

SCALE:1:12

SHEET 1 OF 1