SOMERSET®

Tel: 978.667.3355
800.772.4404
Fax: 978.671.9466
Email: somerset@smrset.com
www.smrset.com

DOUGH ROLLER

CDR-2000

Our most advanced all-in-front, compact pizza roller. Sheets dough up to 20" (51cm) in diameter — within seconds.

IDEAL FOR PIZZA AS WELL AS:

- Flour Tortillas
- Sheeting
- Cinnamon Rolls
- Pita Bread
- Pie Crusts
- Cookies
- Calzones
- Sweet Doughs
- Pierogi
- Rolled Dough

HIGHLIGHTS:

- Sheets 500-600pcs per hour
- Ships standard with synthetic, non-stick rollers
- Ergonomic design makes it easy and simple to operate
- Sheets dough to a uniform thickness in seconds
- All stainless steel construction offers safety, sanitation, speed, simplicity, durability, and low cost

SOMERSET INDUSTRIES, INC • 1 ESQUIRE ROAD • NORTH BILLERICA, MA 01862 • U.S.A.

SOMERSET

DOUGH ROLLER

CDR-2000

CDR-2000 SYNTHETIC ROLLERS | **CDR-2000M METALLIC ROLLERS**

FEATURES

- *Simple handle adjustments for exact uniform dough thickness*
- *Spring loaded scrapers readily removable for easy cleaning*
- *Safety sensors for automatic shutoff*
- *Compact design, ideal for use in limited space*
- *Ergonomic design for easy operation*
- *Convenient front operation*
- *Large hopper accepts large pieces of dough*
- *Maintenance free drive mechanism*
- *Drive mechanism isolated from roller area*
- *Sanitary, heavy duty, all stainless steel welded construction*
- *Safe, simple, easy to operate, easy to clean*

INDUSTRY USES:

- *Pizzerias*
- *Restaurants*
- *Institutions*
- *Schools*
- *Mexican establishments*
- *Other ethnic food production*
- *Cafes*
- *Bakeries*

SPECIFICATIONS

(Specifications subject to change without notice)

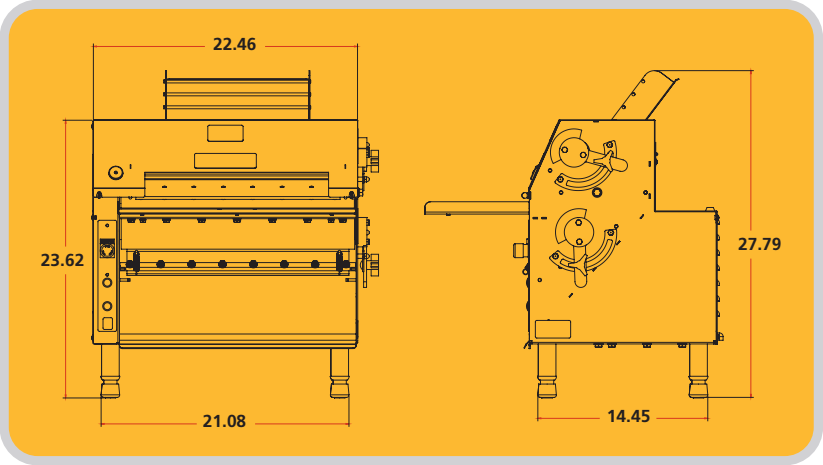

Rollers: 3.5" dia. by 20" length (8.89 cm dia. by 50.80 cm length)

Scrapers: Synthetic, Spring Loaded, Removable

Bearings: Sealed Ball Bearings, Permanently Lubricated

Gear Motor: Heavy Duty 3/4 HP, Single Phase, Maintenance Free, 115v/60Hz or 220v/50Hz

Finishing: All Stainless Steel

Legs: 4" Adjustable, Stainless Steel

Shipping Weight: 210lbs (95.5kgs)

ETL NSF CE USDA APPROVED

MADE IN THE U.S.A. 04.02.13