UNDER COUNTER

INDUSTRY KITCHENS
www.industrykitchens.com.au 1800 611 058

Fan cooling | Digital | LED lamp

SUR9-1
SUF9-1

SUR12-2
SUF12-2

SUR15-2
SUF15-2

SUR18-3
SUF18-3

SUR24-4

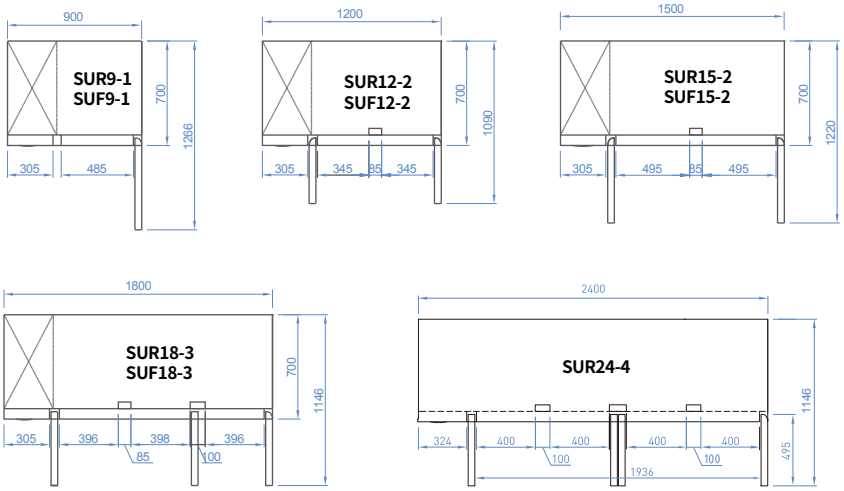

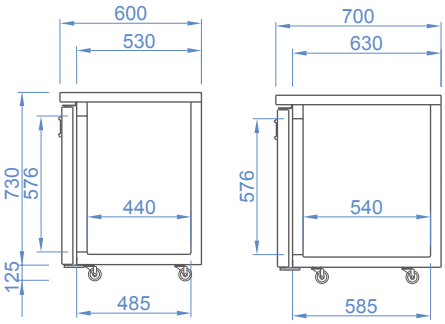

" A lead time may apply to the 600 depth undercounter models"

MODEL	SUR9-1 SUF9-1	SUR12-2 SUF12-2	SUR15-2 SUF15-2	SUR18-3 SUF18-3	SUR24-4
Classific ation	Refrigerator / Freezer				
Cabinet Dimension (WxDxH mm)	900x 700(600) x 855	1200 x 700(600) x 855	1500 x 700(600) x 855	1800 x 700(600) x 855	2400 x 700x 855
Capacity (ℓ)	179	280	395	505	600
Inner Temperature (°C)	-2~ 8 / -21 ~ -12				
Ambient Temperature (°C)	40 / 38				
Refrigerant	R-134a/R-134a	R-134a/R-404a	R-134a/R-404a	R-134a/R-404a	R-134a/R-404a
Insulation Type	Polyurethane / Cyclopentane + CFC Free				
Amps (A)	2.3/2.3	2.5/2.5	2.5/3	3/4.4	3.2
Voltage (V/Hz/Ph)	240 / 50 / 1				
Weight (Kg)	72	84	93	109	145
Power (W)	314/366	314/613	314/613	366/613	440
Number of Doors	1	2	2	3	4
Compressor (HP)	1/4 1/3	1/4 1/3	1/4 3/4	1/3 3/4	1/3
Number of Shelves	1	2	2	3	4
Power Plug	10A				