GIORIK
INNOVATIVE COOKING EQUIPMENT SINCE 1963

INDUSTRY KITCHENS
www.industrykitchens.com.au 1800 611 058

FMG741TFT

Frytop - Gas, Mild Steel, Smooth/Ribbed Plate / Countertop

700

Product Information:

- Class leading, European style, professional quality and reliability since 1963
- 700 series, gas frytop with 2/3 smooth and 1/3 ribbed 12mm mild steel plate (50 MJ/h)
- Piezo ignition burners with flame failure device and pilot burner
- Temperature regulation via variable power flame control
- Robust 304 grade stainless steel construction with rounded corners for improved cleaning
- Hermetically sealed, pressed work surface with raised edges to protect from overflow
- Removable grease tray
- 24-month warranty

General Drawing:

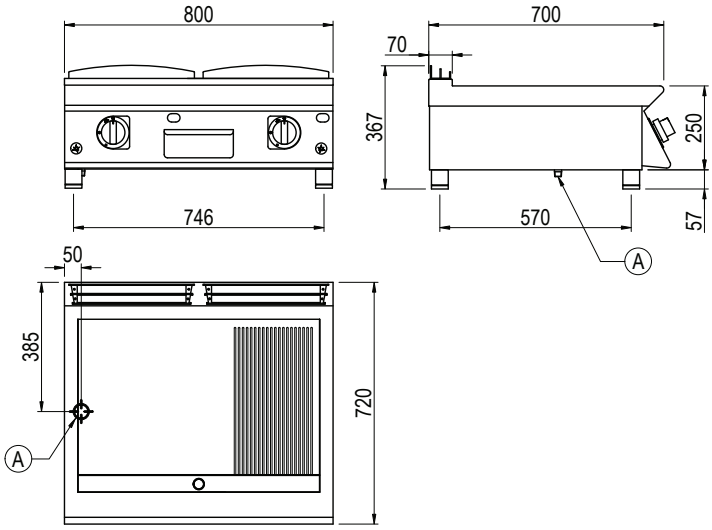

Specifications:

Model	FMG741TFT
W x D x H (mm)	800 x 720 x 367
Weight	80kg
Cooktop (mm)	720 x 460
Packed Dimensions (mm)	845 x 825 x 570
Packed Weight (mm)	90kg

	Natural	Universal LPG
Gas Connection	1/2" BSP	1/2" BSP
Minimum Normal Test Gas Pressure	1.3 kPa	2.75 kPa
Maximum Normal Test Gas Pressure	3.5 kPa	3.5 kPa
Nominal Test Point Pressure	1.0 kPa	2.65 kPa
Total Nominal Gas Consumption	50 MJ/h	50 MJ/h

Note: It is the responsibility of the installing gas plumber to ensure correct supply and connection sustaining appropriate pressure, when all installed gas appliances are operating at maximum.

Legend:

A	Gas Connection

Due to continuous product research and development,
the information contained herein is subject to change without notice.

Revision: 01 - 05/01/2022 - A

www.stoddart.com.au
www.stoddart.co.nz

AUSTRALIA AND NEW ZEALAND GAS SAFETY CERTIFICATION

STODDART®