ZANUSSI PROFESSIONAL

INDUSTRY KITCHENS

www.industrykitchens.com.au 1800 611 058

Magistar Combi DS Electric Combi Oven 6GN2/1

ITEM # _____

MODEL # _____

NAME # _____

SIS # _____

AIA # _____

218831 (ZCOE62B2S0) Magistar Combi DS combi boiler oven with digital control, 6x2/1GN, electric, programmable, automatic cleaning, boiler in AISI304 (Australia)

Short Form Specification

Item No. _____

Combi oven with high resolution full touch screen interface, multilanguage
- Built-in steam generator with real humidity control based upon Lambda Sensor
- AirFlow air distribution system to achieve maximum performance with 7 fan speed levels
- HP Automatic Cleaning: Automatic and built-in self cleaning system with integrated descale of the steam generator. 5 automatic cycles (soft, medium, strong, extra strong, rinse-only) and economizer functions to save energy, water, detergent and rinse aid
- Cooking modes: Automatic (9 food families with 100+ different pre-installed variants); Programs (a maximum of 1000 recipes can be stored and organized in 16 different categories); Manual (steam, combi and convection cycles); Specialistic Cycles (regeneration, Low Temperature Cooking, proving, EcoDelta, Sous-Vide, Static-Combi, Pasteurization of pasta, dehydration, Food Safe Control and Advanced Food Safe Control)
- Special functions: MultiTimer cooking, Cooking Optimizer to cut running costs, Make-it-Mine to customize interface, SoloMio to customize homepage, agenda Calendar, automatic backup mode to avoid downtime
- USB port to download HACCP data, programs and settings. Connectivity ready
- 6-point multi sensor core temperature probe
- Double glass door with LED lights
- Stainless steel construction throughout
- Supplied with n.1 tray rack 2/1 GN, 67 mm pitch.

APPROVAL: _____

Main Features

- Digital interface with LED backlight buttons with guided selection.
- Built-in steam generator for highly precise humidity and temperature control according to the chosen settings.
- Real humidity control based upon Lambda Sensor to automatically recognize quantity and size of food for consistent quality results.
- Dry, hot convection cycle (25 °C - 300 °C): ideal for low humidity cooking.
- Combination cycle (25 °C - 300 °C): combining convected heat and steam to obtain humidity controlled cooking environment, accelerating the cooking process and reducing weight loss.
- Low temperature Steam cycle (25 °C - 99 °C): ideal for sous-vide, re-thermalization and delicate cooking. Steam cycle (100 °C): seafood and vegetables. High temperature steam (25 °C - 130 °C).
- EcoDelta cooking: cooking with food probe maintaining preset temperature difference between the core of the food and the cooking chamber.
- Pre-set program for Regeneration, ideal for banqueting on plate or rethermalizing on tray.
- Programs mode: a maximum of 100 recipes can be stored in the oven's memory, to recreate the exact same recipe at any time. 4-step cooking programs also available.
- AirFlow air distribution system to achieve maximum performance in chilling/heating evenness and temperature control thanks to a special design of the chamber combined with high precision variable speed fan.
- Fan with 5 speed levels from 300 to 1500 RPM and reverse rotation for optimal evenness. Fan stops in less than 5 seconds when door is opened.
- Single sensor core temperature probe included.
- Automatic fast cool down and pre-heat function.
- HP Automatic Cleaning: Automatic and built-in self cleaning system with integrated descale of the steam generator. 5 automatic cycles (soft, medium, strong, extra strong, rinse-only).
- Grease Collector: predisposed for integrated grease drain and collection for safer operation (dedicated base as optional accessory).
- USB port to download HACCP data, share cooking programs and configurations. USB port also allows to plug-in sous-vide probe (optional accessory).
- Connectivity ready for real time access to connected appliances from remote and HACCP monitoring (requires optional accessory).
- Back-up mode with self-diagnosis is automatically activated if a failure occurs to avoid downtime.
- 2 different chemical options available: solid and liquid (requires optional accessory).
- Capacity: 6 GN 2/1 or 12 GN 1/1 trays.
- Connectivity ready for real time access to connected appliances from remote and data monitoring (requires optional accessory – contact the Company for more details).
- [NOT TRANSLATED]

Magistar Combi DS
Electric Combi Oven 6GN2/1

Construction

- Double thermo-glazed door with open frame construction, for cool outside door panel. Swing hinged easy-release inner glass on door for easy cleaning.
- Seamless hygienic internal chamber with all rounded corners for easy cleaning.
- 304 AISI stainless steel construction throughout.
- Front access to control board for easy service.
- IPX 5 spray water protection certification for easy cleaning.
- Supplied with n.1 tray rack 2/1 GN, 67 mm pitch.

Sustainability

- Reduced power function for customized slow cooking cycles.

Optional Accessories

Water softener with cartridge and flow meter (high steam usage)	PNC 920003	❑
Water softener with salt for ovens with automatic regeneration of resin	PNC 921305	❑
Wheel kit for 6 & 10 GN 1/1 and 2/1 GN oven base (not for the disassembled one)	PNC 922003	❑
Pair of AISI 304 stainless steel grids, GN 1/1	PNC 922017	❑
Pair of grids for whole chicken (8 per grid - 1,2kg each), GN 1/1	PNC 922036	❑
AISI 304 stainless steel grid, GN 1/1	PNC 922062	❑
AISI 304 stainless steel grid, GN 2/1	PNC 922076	❑
External side spray unit (needs to be mounted outside and includes support to be mounted on the oven)	PNC 922171	❑
Pair of AISI 304 stainless steel grids, GN 2/1	PNC 922175	❑
Baking tray for 5 baguettes in perforated aluminum with silicon coating, 400x600x38mm	PNC 922189	❑
Baking tray with 4 edges in perforated aluminum, 400x600x20mm	PNC 922190	❑
Baking tray with 4 edges in aluminum, 400x600x20mm	PNC 922191	❑
Pair of frying baskets	PNC 922239	❑
AISI 304 stainless steel bakery/pastry grid 400x600mm	PNC 922264	❑
Double-step door opening kit	PNC 922265	❑
Grid for whole chicken (8 per grid - 1,2kg each), GN 1/1	PNC 922266	❑
Kit universal skewer rack and 6 short skewers for Lengthwise GN 2/1 and Crosswise ovens	PNC 922325	❑
Universal skewer rack	PNC 922326	❑
6 short skewers	PNC 922328	❑
Smoker for lengthwise and crosswise oven (4 kinds of smoker wood chips are available on request)	PNC 922338	❑
Multipurpose hook	PNC 922348	❑
4 flanged feet for 6 & 10 GN , 2", 100-130mm	PNC 922351	❑
Grease collection tray, GN 2/1, H=60 mm	PNC 922357	❑
Grid for whole duck (8 per grid - 1,8kg each), GN 1/1	PNC 922362	❑
Tray support for 6 & 10 GN 2/1 disassembled open base	PNC 922384	❑
Wall mounted detergent tank holder	PNC 922386	❑
USB SINGLE POINT PROBE	PNC 922390	❑
Slide-in rack with handle for 6 & 10 GN 2/1 oven	PNC 922605	❑
Tray rack with wheels, 5 GN 2/1, 80mm pitch	PNC 922611	❑
Open base with tray support for 6 & 10 GN 2/1 oven	PNC 922613	❑
Cupboard base with tray support for 6 & 10 GN 2/1 oven	PNC 922616	❑
Hot cupboard base with tray support for 6 & 10 GN 2/1 oven holding GN 1/1 or400x600mm	PNC 922617	❑
External connection kit for detergent and rinse aid	PNC 922618	❑
Stacking kit for electric 6 GN 2/1 oven placed on electric 10 GN 2/1 oven	PNC 922621	❑
Trolley for slide-in rack for 6 & 10 GN 2/1 oven and blast chiller freezer	PNC 922627	❑
Trolley for mobile rack for 2 stacked 6 GN 2/1 ovens on riser	PNC 922629	❑
Trolley for mobile rack for 6 GN 2/1 on 6 or 10 GN 2/1 ovens	PNC 922631	❑
Riser on feet for stacked 2x6 GN 1/1 ovens	PNC 922633	❑
Riser on wheels for stacked 2x6 GN 2/1 ovens, height 250mm	PNC 922634	❑
Stainless steel drain kit for 6 & 10 GN oven, dia=50mm	PNC 922636	❑
Plastic drain kit for 6 &10 GN oven, dia=50mm	PNC 922637	❑
Trolley with 2 tanks for grease collection	PNC 922638	❑
Grease collection kit for open base (2 tanks, open/close device and drain)	PNC 922639	❑
Wall support for 6 GN 2/1 oven	PNC 922644	❑
Dehydration tray, GN 1/1, H=20mm	PNC 922651	❑
Flat dehydration tray, GN 1/1	PNC 922652	❑
Open base for 6 & 10 GN 2/1 oven, disassembled	PNC 922654	❑
Heat shield for 6 GN 2/1 oven	PNC 922665	❑
Heat shield-stacked for ovens 6 GN 2/1 on 6 GN 2/1	PNC 922666	❑
Heat shield-stacked for ovens 6 GN 2/1 on 10 GN 2/1	PNC 922667	❑
Fixed tray rack, 5 GN 2/1, 85mm pitch	PNC 922681	❑
Kit to fix oven to the wall	PNC 922687	❑
4 high adjustable feet for 6 & 10 GN ovens, 100-115MM	PNC 922688	❑
Tray support for 6 & 10 GN 2/1 open base	PNC 922692	❑
Detergent tank holder for open base	PNC 922699	❑
Tray rack with wheels, 6 GN 2/1, 65mm pitch (included)	PNC 922700	❑
Mesh grilling grid	PNC 922713	❑
Probe holder for liquids	PNC 922714	❑
Odourless hood with fan for 6 & 10 GN 2/1 electric ovens	PNC 922719	❑
Condensation hood with fan for 6 & 10 GN 2/1 electric oven	PNC 922724	❑
4 high adjustable feet for 6 & 10 GN ovens, 230-290mm	PNC 922745	❑

The company reserves the right to make modifications to the products without prior notice. All information correct at time of printing.

2024.01.25

• Tray for traditional static cooking, H=100mm	PNC 922746	❑
• Double-face griddle, one side ribbed and one side smooth, 400x600mm	PNC 922747	❑
• TROLLEY FOR GREASE COLLECTION KIT	PNC 922752	❑
• Water inlet pressure reducer	PNC 922773	❑
• KIT FOR INSTALLATION OF ELECTRIC POWER PEAK MANAGEMENT SYSTEM-6-10 GN OVENS	PNC 922774	❑
• Non-stick universal pan, GN 1/1, H=20mm	PNC 925000	❑
• Non-stick universal pan, GN 1/ 1, H=40mm	PNC 925001	❑
• Non-stick universal pan, GN 1/1, H=60mm	PNC 925002	❑
• Double-face griddle, one side ribbed and one side smooth, GN 1/1	PNC 925003	❑
• Aluminum grill, GN 1/1	PNC 925004	❑
• Frying pan for 8 eggs, pancakes, hamburgers, GN 1/1	PNC 925005	❑
• Flat baking tray with 2 edges, GN 1/1	PNC 925006	❑
• Potato baker for 28 potatoes, GN 1/1	PNC 925008	❑
• Compatibility kit for installation on previous base GN 2/1	PNC 930218	❑

The company reserves the right to make modifications to the products without prior notice. All information correct at time of printing.

Magistar Combi DS
Electric Combi Oven 6GN2/1

Front

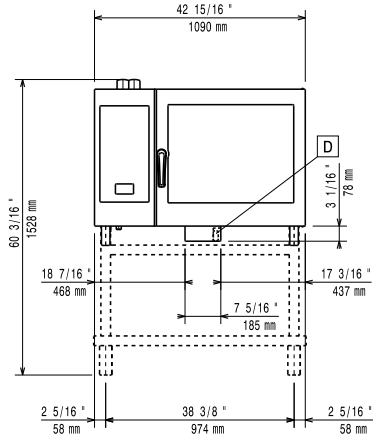

Side

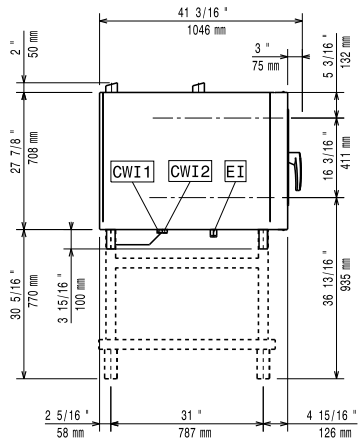

C-WI-1 = Cold Water inlet 1

C-WI-2 = Cold Water Inlet 2

D = Drain

DO = Overflow drain pipe

EI = Electrical inlet (power)

Top

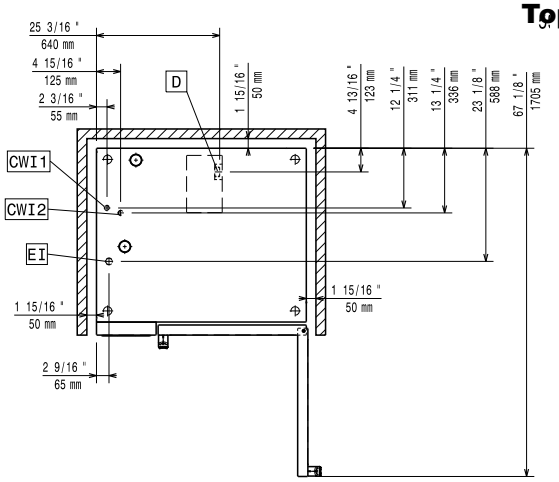

Electric

Supply voltage:	
218831 (ZCOE62B2S0)	400-430 V/3N ph/50-60 Hz
Electrical power, default:	21.4 kW
Electrical power max.:	22.3 kW
Circuit breaker required	

Water:

Water inlet "FCW" connection:	3/4"
Pressure, bar min/max:	1-6 bar
Drain "D":	50mm
Max inlet water supply temperature:	30 °C
Chlorides:	<17 ppm
Conductivity:	>50 µS/cm

Electrolux Professional recommends the use of treated water, based on testing of specific water conditions.

Please refer to user manual for detailed water quality information.

Installation:

Clearance:	Clearance: 5 cm rear and right hand sides.
Suggested clearance for service access:	50 cm left hand side.

Capacity:

GN:	6 - 2/1 Gastronorm
Max load capacity:	60 kg

Key Information:

Door hinges:	
External dimensions, Width:	1090 mm
External dimensions, Depth:	971 mm
External dimensions, Height:	808 mm
Net weight:	162.5 kg
Shipping weight:	185.5 kg
Shipping volume:	1.27 m³

The company reserves the right to make modifications to the products without prior notice. All information correct at time of printing.

2024.01.25