Wexiödisk

INDUSTRY KITCHENS
www.industrykitchens.com.au 1800 611 058

MOFFAT

WD-6CH

ERGONOMIC PASSTHROUGH DISHWASHER WITH CONDENSING UNIT

STANDARD FEATURES:

- Including condensing unit with heat recovery by exhaust steam
- Washes up to 50 baskets per hour
- 2.5 litres per cycle water consumption
- 50 litre wash tank volume
- Unique hood designed for steam to escape at the back of machine
- Simple program selection – 3 levels of wash cycle for varying types of soiled products
- Auto Start function
- Electronic control panel with event log recording for diagnostics and trouble shooting
- Automatic cleaning program
- Self-draining wash arms for optimum wash results
- 0.9kW wash pump with 9kW booster heater
- Fixed basket conveyor designed for improved washing results and cleaning
- Smooth internal surfaces for easy cleaning
- Stainless steel construction
- Corner or in-line installation
- Supplied with 3 high quality dish racks for cups, plates and cutlery
- Automatic hood lift
- Drain pump
- Detergent pump for liquid detergent

Upgrades and options are available, please contact Moffat for more details

TECHNICAL INFORMATION:

Dimensions
Width: 600mm
Depth: 739mm
Height: 2146mm

Water
COLD WATER ONLY
Connection: R ½" Direct
Pressure: 180kPa
Flow: 10 litres per min
Water quality (Hardness): 2-7odH

Waste
Connection: 50mm dia Direct
Drain Flow: 3 litres per second

Electrical
3P+N+E 400-415V 50/60Hz
9.9kW 16A Cordset supplied

Refer operator manual for complete installation instructions

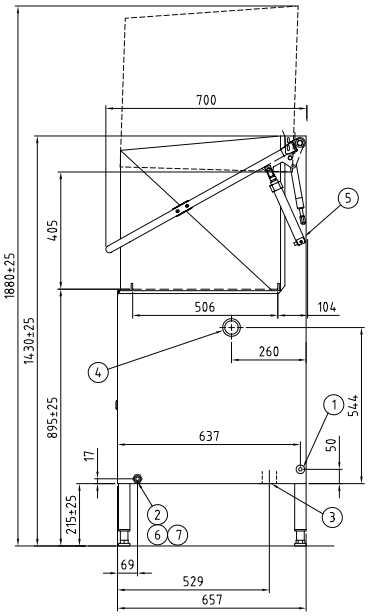

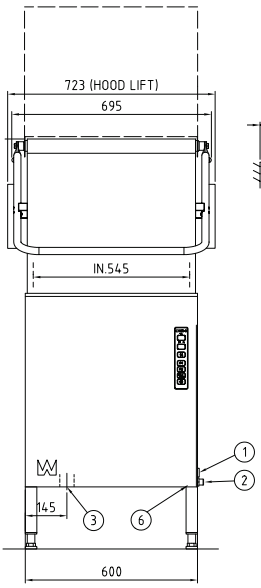

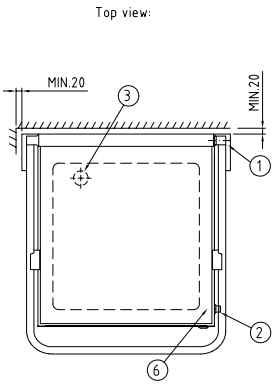

1. Electrical connection
2. Water connection R½"
3. Drain connection, diameter 50 mm, 3l/sec
4. Plugged hole for detergent hose
5. Bleed screw for the lifting cylinder
6. Water outlet for detergent
7. Alternative water connection from below

Australia
moffat.com.au
Moffat Pty Limited
740 Springvale Road
Mulgrave
Victoria 3170
Australia
Telephone +613-9518 3888
Facsimile +613-9518 3833
vsales@moffat.com.au

New Zealand
moffat.co.nz
Moffat Limited
45 Illinois Drive
Izone Business Hub
Rolleston 7675
New Zealand
Telephone +64 3-983 6600
Facsimile +64 3-983 6660
sales@moffat.co.nz

In line with policy to continually develop and improve its products, Moffat Limited reserves the right to change specifications and design without notice.

© Copyright Moffat Ltd

AN.WDK.SS.1701

24:7 Service Support

an Ali Group Company

Ali GROUP
The Spirit of Excellence