CS 900mm Cooktops

LUUS

Technical Specifications for CS-6B, CS-2B6P, CS-4B3P, CS-4B3C

INDUSTRY KITCHENS

www.industrykitchens.com.au 1800 611 058

PROFESSIONAL

- Nickel plated 28 mj open burners with FFD standard
- Burner, chargrill & hotplate combinations
- Available freestanding or as a benchtop model
- Modular Professional series design
- 24 month 'Platinum Warranty'
- Easy to clean and service

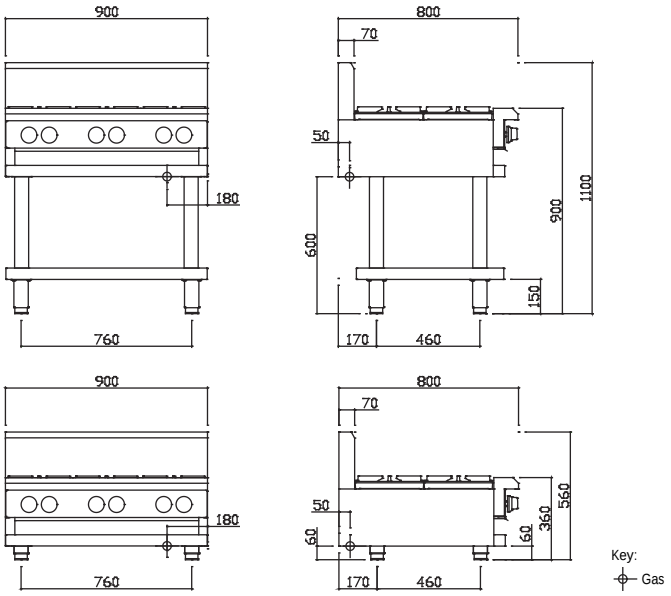

	Model	Description	Nat Gas	LP Gas
	CS-6B	6 burner cooktop	168 mj	168 mj
	CS-2B6P	2 burners, 600 grill	92 mj	92 mj
	CS-4B3P	4 burners, 300 grill	130 mj	130 mj
	CS-4B3C	4 burners, 300 bbq	145 mj	145 mj

Open Burners
- Nickel plated cast iron 28 mj dual-flame ring burners
- Flame failure device standard (pilots optional extra)
- Variable flame control valve with low flame setting
- Heavy duty cast iron trivets
- Pressed 0.7mm 304 stainless steel spillage bowls

Griddle/Hotplate
- 18 mj burners with pilot, FFD and piezo ignition
- Variable flame control valve with low flame setting
- 21mm thick mild steel griddle plate
- Top weld sealed hotplate sections
- CS-2B6P plate: 590mm x 540mm; 0.32m2 cooking area
- CS-4B3P plate: 290mm x 540mm; 0.16m2 cooking area
- 2mm 304 stainless steel splash guards

Chargrill/Barbecue
- 33 mj burners with pilot, FFD and piezo ignition
- Variable flame control valve with low flame setting
- Two piece burner with cast-iron heat distributing hood
- Optional ceramic rocks for even heat and smokiness
- Optional cast iron ceramic rock tray
- CS-4B3C bbq: 280mm x 520mm; 0.15cm2 cooking area
- 2mm 304 stainless steel splash guards

Overall Construction
- Heavy duty construction
- Welded 1.2mm 304 stainless steel front hob
- Front and side panels 0.9mm 304 stainless steel
- Splashback 1.2 mm 304 stainless steel
- Stainless steel legs with 55mm height adjustment range
- Secondary catchment tray 0.9mm stainless steel

Dimensions
- 900mm x 800mm x 1100mm H
- 900mm x 800mm x 560mm H (benchtop)
- Working height 900mm
- Weight 118kg
- Packed dimensions 940mm x 860mm x 1260mm H
- Packed weight 143kg

Connections
- Gas 3/4" BSP male
- 180mm from right, 50mm from rear, 600mm from floor
- Benchtop model gas connection: 60mm from bottom
- Supplied with gas regulator (specify Nat or LP on order)

Cleaning & Servicing
- Removable burner hoods and spillage bowls
- Secondary undertray to catch any additonal waste
- Easy access to all parts & components from front

Options/Accessories
- Rear castors
- Pilots to open burners
- 300mm drop on plate (6mm mild steel) for open burners
- Ribbed or chrome finish on hotplates
- RH and LH side shields
- Ceramic rocks (specify when ordering)
- Benchtop mount (specify when ordering)

AUSTRALIAN MADE AND OWNED

24 MONTHS PLATINUM WARRANTY

AGA