coldline

INDUSTRY KITCHENS
www.industrykitchens.com.au 1800 611 058

Client _____ Quantity _____
Project _____ Position _____

Modi Up Blast Chiller

Model: W5U **Cod:** W11033000001

Technical data

Top:	Thickness 4 cm. Reinforced in order to place an oven
Gross capacity:	134 lt
Temperature range:	-40°+10°C
Ventilation range:	25% - 100%
Humidifier:	Non disponibile
Refrigerant unit:	Plug-In
Yield +90 / +3:	22 Kg
Yield +90 / -18:	17 Kg
Climate class:	5
Cooling gas:	R452A
Defrost:	Hot gas
Valve:	Electronic expansion valve
Dimensions:	780×800×853 mm
Packing dimensions:	810×760×895 mm
Gross weight:	115 Kg
Voltage:	220-240 V - 50 Hz
Total rate:	1030 W
Absorbed Current:	4,98 A
Cooling capacity:	1565 W*
***:**	Evap. -10°C Cond. +45°C

Features

Functions:	Blast chilling, shock freezing, continuous cycle
Standard equipment:	5 slides GN1/1, EN60x40
Control:	4,3" touch screen display with USB port
Doors:	Cushioned, with anti-odor system
Door gasket:	Magnetic, triple chamber and easily replaceable
Core probe:	Needle probe with 1 reading point, quick-release and easily replaceable
Insulation:	60 mm thickness - CFC/HCFC free
Exterior/interior finishing:	Exterior and interior AISI 304 stainless steel.
Inner corners:	Rounded for easy cleaning and ensuring maximum hygiene
Handle:	Stainless steel AISI 304, 2 mm thick
Racks and slides:	Stainless steel AISI 304, quick release
Feets:	Stainless steel AISI 304, adjustable h 100-150 mm
Cosmo:	Wi-Fi remote control system

In order to constantly offer the best possible products we reserve the right to make changes on technical specifications without incurring any obligation for equipment previosly or subsequently sold.

Accessories and variants

- Sonda al cuore a 3 punti di lettura
- Sonda al cuore riscaldata a 1 punto di lettura
- Reverse door opening from standard
- Power supply frequency 60Hz
- Other special voltage
- Lowered foot h 55/70 mm
- 4 Swivel and brake castors h 128 mm
- Stainless steel shelf GN1/1
- Plastic coated shelf GN1/1
- Stainless steel shelf EN60x40
- Plastic coated shelf EN60x40
- Pair of type L slides 398 mm GN-EN
- Sterilizing UV lamp (U version)

COSMO - wi-fi control

Cosmo is the wi-fi technology that allow to connect, update and monitor with a smartphone the MODI blast chiller. MODI is also a Cosmo hub and allow remote supervision of the Coldline devices connected to it.

*The installation requires a kit for the replacement of the racks

Technical draw

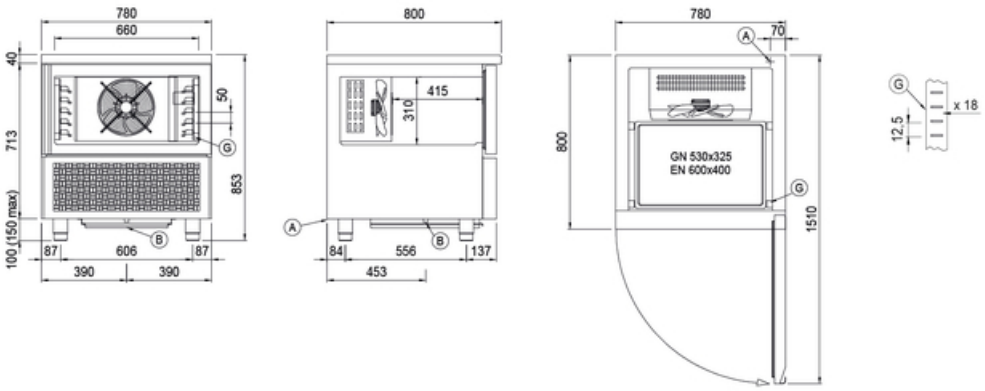

A: Power supply cable outlet

B: Condensation water drain

G: Racks pitch

In order to constantly offer the best possible products we reserve the right to make changes on technical specifications without incurring any obligation for equipment previosly or subsequently sold.