serieT CONVEYOR | TT96G

INDUSTRY KITCHENS
www.industrykitchens.com.au 1800 611 058

MORETTI FORNI The SmartBaking Company®

Modular conveyor oven

TT96G, the gas modular conveyor oven, is composed of one or more **stackable baking chambers** and an optional stand. During baking, the product is placed on the conveyor belt and passes through two flows of hot air: **impingement technology**, the best system for heat distribution in the whole baking chamber for **perfect baking** of **pizza, pastry**, **bakery,** and **gastronomy**. Efficiently insulated and isolated, the external surfaces are cool even during use. The baking chamber maximum temperature is 320°C (608°F).

OPERATION

- Heating by means of two blowing burners with premixing function of air and gas
- Electronically modulated control of two burners flames that allows the automatic energy control on the strength of the quantity of the baked product and the position located inside the baking chamber ADAPTIVE-GAS® TECHNOLOGY
- Independent regulation and control both the input side and the output side of the baked product with continuous temperatures survey with 2 high sensitive thermocouples DUAL-TEMP® TECHNOLOGY
- Air blowing system using 2 stainless steel fans independently motorized
- Conveyor belt with speed adjustable from 45” to 20 minutes using Brushless engine at the option of belt standstill
- Programmable electronic function management ECO-SMARTBAKING®
- Different baking heating regulations between upper and lower part of the product DUAL FLOW® TECHNOLOGY
- Maximum temperature reached 320°C (608°F)
- Independent system for additional forced air cooling of the components with low noise

CONSTRUCTION

- Structure in folded stainless steel sheets
- Stainless steel door hinged on left hand side with logo BlackBar® Design
- Stainless steel access flap hinged at bottom
- Tempered glass window
- Low-cluttered handle
- Extractable stainless steel conveyor belt, with continuous tensioning
- Electronic control panel on front left side
- Double Peephole for checking the burner status
- Baking chamber in stainless steel sheets
- Top and bottom blowers in welded stainless steel sheets, extractable for cleaning
- Double Low-emission (NOx, CO) stainless steel burner
- Double Combustion chamber entirely built with special high-temperatures stainless steel
- Rock wool heat insulation, thermal joints and air space COOL AROUND® Technology

ACCESSORIES

- Stand with castors, height 145, 600mm complete with pocket for screens
- Hood for vapour extraction

BAKING DIMENSIONS

Belt width L	650mm
Internal length	910mm
Total length P	2050mm
Total length P with pizza rest	2475mm
Tot. baking surface	0,59m^2

STANDARD EQUIPMENT

- Color multilanguage display TFT 5”
- 100 customisable programs
- ECO-STAND BY™ TECHNOLOGY Saving device with the possibility to stop the belt for break
- Discontinuous baking cycle STEP
- Start-Stop function to move tape to the set point is reached
- LOCK function
- Customized Hotkey with recurring control
- Auto test with display of error message
- USB imput and wifi module for sw update
- Double independent maximum temperature and minimum blow pressure safety devices
- Stainless steel resting support

TOP VIEW

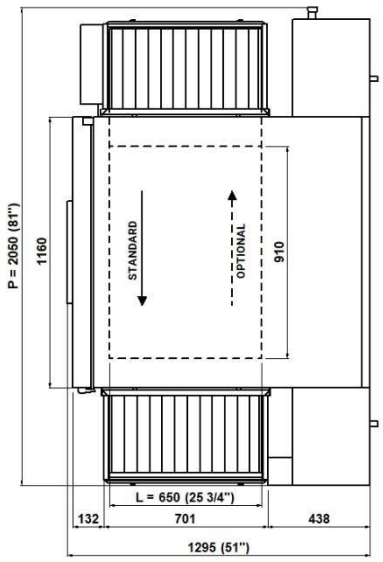

serieT CONVEYOR | **TT96G**

INDUSTRY KITCHENS
www.industrykitchens.com.au 1800 611 058

MORETTI FORNI The SmartBaking Company®

1 baking chamber

(assembled with stand height 600mm)

REAR VIEW

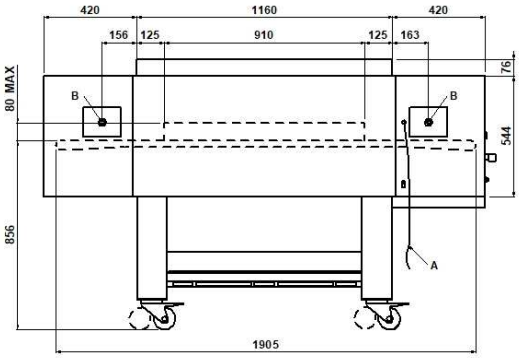

RIGHT SIDE VIEW

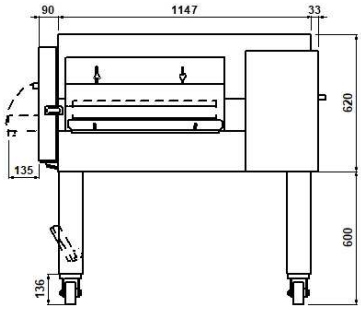

RIGHT SIDE VIEW

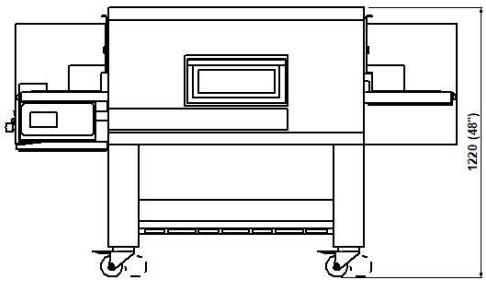

NOTE: The dimensions indicated in the views are in millimeters.

A	B		
Electrical cable length 2 meters	Cone-shaped male gas manifold 1/2" GAS		

DIMENSIONS

External height	1220mm
External depth.	1295mm
External width.	2050mm
Weight (excl.stand)	322kg

TOTAL BAKING CAPACITY

*N° Pizzas /hour	
Pizzas diameter 330mm	N°100
Pizzas diameter 450mm	N°38

SHIPPING INFORMATION

Dimensions of packed oven	
Width	790mm
Weight	1390mm
Width	2152mm
Weight	(322+25)kg
Packaged stand dimensions:	
Width	200mm
Weight	600mm
Width	1150mm
Weight	(28+2)kg

FEEDING AND POWER

Type of equipment	A3-B23
Thermic power max	22kW
Therm. power reduced	5,7kW
Gas power: NATURAL GAS or LPG	
*Hour consumption max	
Natural gas G20	2,328m³/h
Natural gas G25	2,46m³/h
Natural gas G25.1	2,457m³/h
Natural gas G25.3	2,407m³/h
LPG G30	1,735kg/h
LPG G31	1,709kg/h
Standard electric power	
A.C. V230 1N	
Frequency	50/60Hz
Electric power	0,7kW
Connecting cable for each chamber type:	
H07RN-F	3x1,5mm²

*** This value is subject to variation according to the way in which the equipment is used**

NOTE: MORETTI FORNI S.P.A. reserves the right to modify the characteristics of the products illustrated in this publication without prior notice

serieT CONVEYOR | **TT96G**

INDUSTRY KITCHENS
www.industrykitchens.com.au 1800 611 058

MORETTI FORNI The SmartBaking Company®

2 baking chambers
(assembled with stand height 600mm)

REAR VIEW **RIGHT SIDE VIEW** **RIGHT SIDE VIEW**

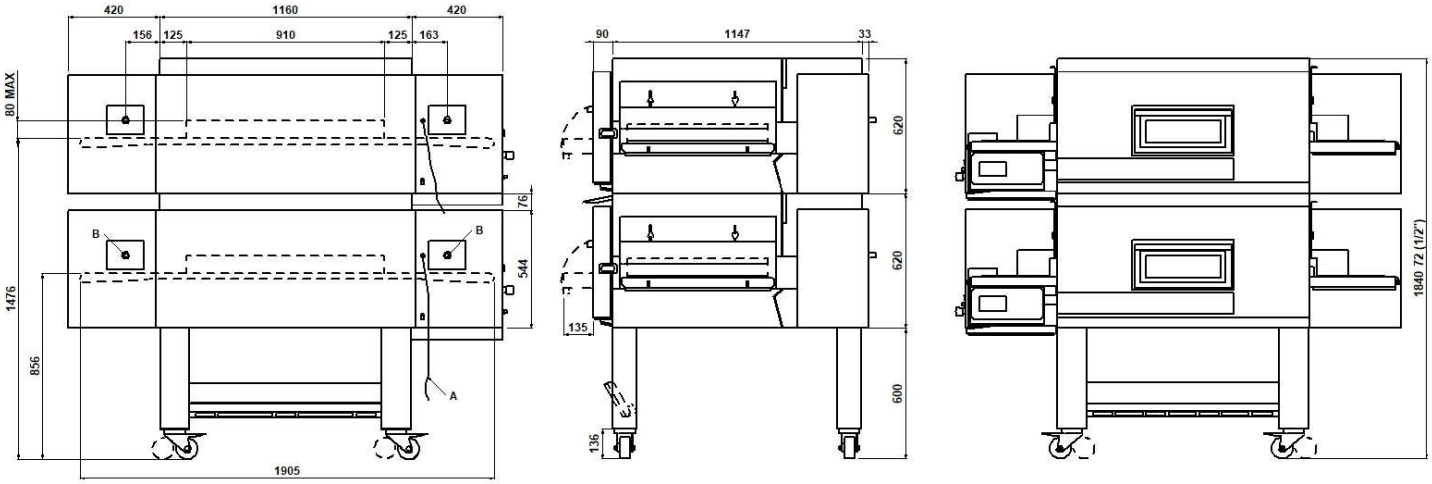

NOTE: The dimensions indicated in the views are in millimeters.

A	B		
Electrical cable length 2 meters	Cone-shaped male gas manifold 1/2" GAS		

DIMENSIONS

External height	1840mm
External depth.	1295mm
External width.	2050mm
Weight (excl.stand)	644kg

TOTAL BAKING CAPACITY

*N° Pizzas /hour	
Pizzas diameter 330mm	N°200
Pizzas diameter 450mm	N°76

SHIPPING INFORMATION

Packed oven (each packed deck)	
Height	2x790mm
Depth	1390mm
Width	2152mm
Weight	(644+50)kg
Packaged stand dimensions:	
Height	200mm
Depth	600mm
Width	1150mm
Weight	(28+2)kg

FEEDING AND POWER

Type of equipment	A3-B23
Thermic power max	44kW
Therm. power reduced	11,4kW
Gas power: NATURAL GAS or LPG	
*Hour consumption max	
Natural gas G20	4,656m³/h
Natural gas G25	4,92m³/h
Natural gas G25.1	4,914m³/h
Natural gas G25.3	4,814m³/h
LPG G30	3,47kg/h
LPG G31	3,418kg/h
Standard electric power	A.C. V230 1N
Frequency	50/60Hz
Electric power	1,4kW
Connecting cable for each chamber type:	
H07RN-F	3x1,5mm²

*** This value is subject to variation according to the way in which the equipment is used**

NOTE: MORETTI FORNI S.P.A. reserves the right to modify the characteristics of the products illustrated in this publication without prior notice

serieT CONVEYOR | **TT96G**

INDUSTRY KITCHENS
www.industrykitchens.com.au 1800 611 058

MORETTI FORNI The SmartBaking Company®

3 baking chambers

(assembled with stand height 145mm)

REAR VIEW **RIGHT SIDE VIEW** **RIGHT SIDE VIEW**

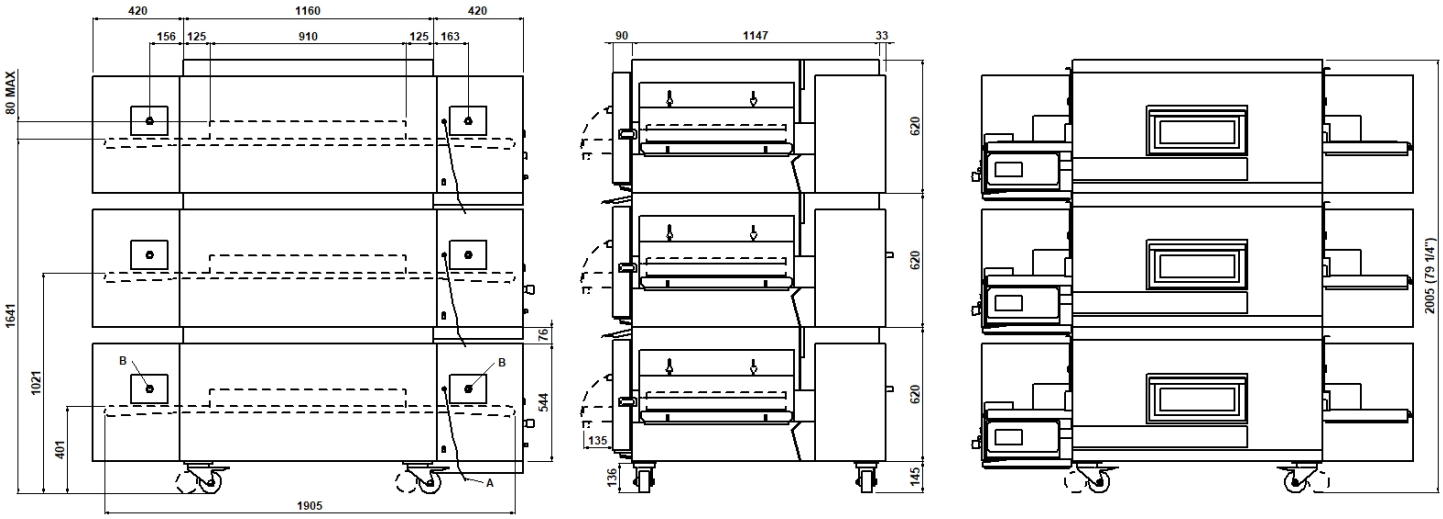

NOTE: The dimensions indicated in the views are in millimeters.

A	B		
Electrical cable length 2 meters	Cone-shaped male gas manifold 1/2" GAS		

DIMENSIONS

External height	2013mm
External depth.	1295mm
External width.	2050mm
Weight (excl.stand)	966kg

TOTAL BAKING CAPACITY

*N° Pizzas /hour	
Pizzas diameter 330mm	N°300
Pizzas diameter 450mm	N°114

SHIPPING INFORMATION

Packed oven (each packed deck)	
Height	3x790mm
Depth	1390mm
Width	2152mm
Weight	(966+75)kg
Packaged stand dimensions:	
Height	280mm
Depth	420mm
Width	270mm
Weight	(16+1)kg

FEEDING AND POWER

Type of equipment	A3-B23
Thermic power max	66kW
Therm. power reduced	17,1kW
Gas power: NATURAL GAS or LPG	
*Hour consumption max	
Natural gas G20	6,984m³/h
Natural gas G25	7,38m³/h
Natural gas G25.1	7,371m³/h
Natural gas G25.3	7,221m³/h
LPG G30	5,205kg/h
LPG G31	5,127kg/h
Standard electric power	A.C. V230 1N
Frequency	50/60Hz
Electric power	2,1kW
Connecting cable for each chamber type:	
H07RN-F	3x1,5mm²

*** This value is subject to variation according to the way in which the equipment is used**

NOTE: MORETTI FORNI S.P.A. reserves the right to modify the characteristics of the products illustrated in this publication without prior notice