serie T CONVEYOR | TT96E

INDUSTRY KITCHENS
www.industrykitchens.com.au 1800 611 058

MORETTI FORNI The SmartBaking Company®

Modular conveyor oven

TT96E, the electric modular conveyor oven, is composed of one or more **stackable baking chambers** and an optional stand. During baking, the product is placed on the conveyor belt and passes through two flows of hot air: **impingement technology**, the best system for heat distribution in the whole baking chamber for **perfect baking** of **pizza, pastry**, **bakery,** and **gastronomy**. Management of needed power is automatic according to the load. The power control of ceiling and floor is independent and managed by two probes. The conveyor speed is adjustable. Efficiently insulated and isolated, the external surfaces are cool even during use. The baking chamber maximum temperature is 320°C (608°F).

OPERATION

- Heated by armoured heating elements powered independently in adaptive mode
- Control of power PID (Proportional Supplementary Derivative) can allow the automatic regulation of energy necessary on the basis of the quantity of the batch product and the position inside the baking chamber ADAPTIVE-POWER® TECHNOLOGY
- Independent adjustment and control of ceiling and floor, both on the input side and the output one of the baked product, with continuous temperature detection using 4 high sensitive thermocouples QUADRA-TEMP™ TECHNOLOGY
- Air blowing system using 2 stainless steel fans independently motorized
- Conveyor belt with speed adjustable from 45” to 20 minutes using Brushless engine at the option of belt standstill
- Programmable electronic function management ECO-SMARTBAKING®
- Maximum temperature reached 320°C (608°F)
- Independent system for additional forced air cooling of the components with low noise

CONSTRUCTION

- Structure in folded stainless steel sheets
- Stainless steel door hinged on left hand side with logo BlackBar® Design
- Stainless steel access flap hinged at bottom
- Tempered glass window
- Low-cluttered handle
- Extractable stainless steel conveyor belt, with continuous tensioning
- Electronic control panel on front left side
- Baking chamber in stainless steel sheets
- Top and bottom blowers in welded stainless steel sheets, extractable for cleaning
- Rock wool heat insulation, thermal joints and air space COOL AROUND® Technology

ACCESSORIES

- Stand with castors, height 145, 600mm complete with pocket for screens
- Hood for vapour extraction
- Online connection Remote-Master® Technology

BAKING DIMENSIONS

Belt width L	650mm
Internal length	910mm
Total length P	2050mm
Total length P with pizza rest	2475mm
Tot. baking surface	0,59m²

STANDARD EQUIPMENT

- Color multilanguage display TFT 5”
- 100 customisable programs
- ECO-STAND BY™ TECHNOLOGY Saving device with the possibility to stop the belt for break
- Discontinuous baking cycle STEP
- Double pass baking cycle RETURN
- Start-Stop function to move tape to the set point is reached
- LOCK function
- Weekly Timer with the possibility to program two lightings and two power off every day
- Customized Hotkey with recurring control
- Auto test with display of error message
- USB input and wifi module for sw update
- Double independent maximum temperature and minimum blow pressure safety devices
- Stainless steel resting support

TOP VIEW

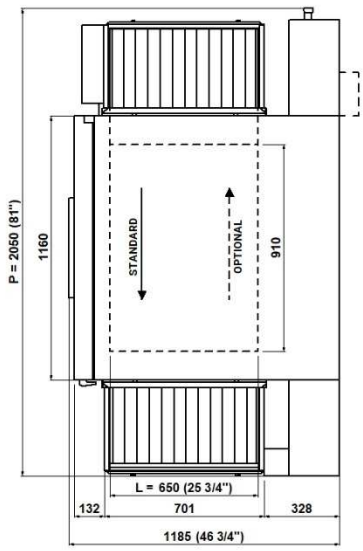

serie T CONVEYOR | **TT96E**

INDUSTRY KITCHENS
www.industrykitchens.com.au 1800 611 058

MORETTI FORNI The SmartBaking Company®

1 baking chamber

(assembled with stand height 600mm)

REAR VIEW

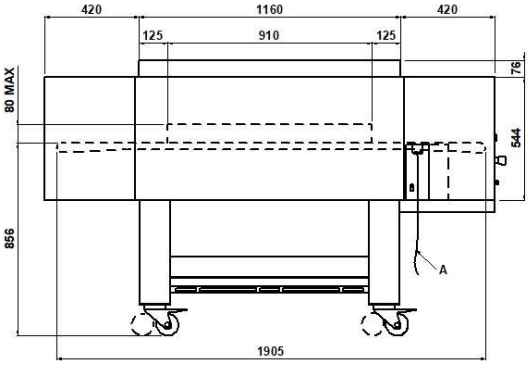

RIGHT SIDE VIEW

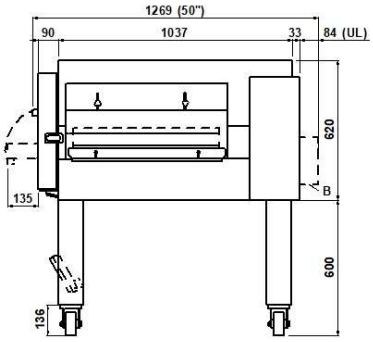

FRONT VIEW

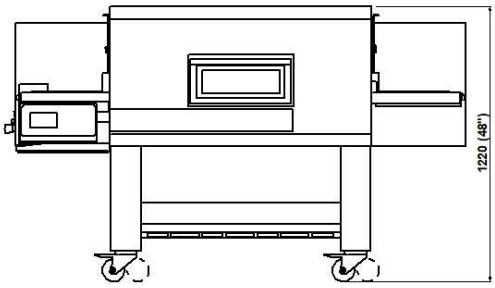

NOTE: The dimensions indicated in the views are in millimeters.

A	B		
Electrical cable length 2 meters	Only for UL model fairlead		

DIMENSIONS

External height.	1220mm
External depth	1185mm
External width	2050mm
Weight(excl.stand)	297kg

TOTAL BAKING CAPACITY

*N° Pizzas /hour	
Pizzas diameter 330mm	N°100
Pizzas diameter 450mm	N°38

SHIPPING INFORMATION

Dimensions of packed oven

Height	790mm
Depth	1325mm
Width	2152mm
Weight	(297+25)kg

Packaged stand dimensions:

Height	200mm
Depth	600mm
Width	1150mm
Weight	(28+2)kg

FEEDING AND POWER

Standard feeding
A.C. V400 3N
Feeding on request
A.C. V230 3

Frequency	50/60Hz
Max power	17,8kW
*Medium cons/hour	7,8kWh

Connecting cable for each chamber
type H07RN-F
5x6mm^2 (V400 3N)
4x10mm^2 (V230 3)

*** This value is subject to variation according to the way in which the equipment is used**

NOTE: MORETTI FORNI S.P.A. reserves the right to modify the characteristics of the products illustrated in this publication without prior notice

serieT CONVEYOR | **TT96E**

INDUSTRY KITCHENS
www.industrykitchens.com.au 1800 611 058

MORETTI FORNI The SmartBaking Company®

2 baking chambers
(assembled with stand height 600mm)

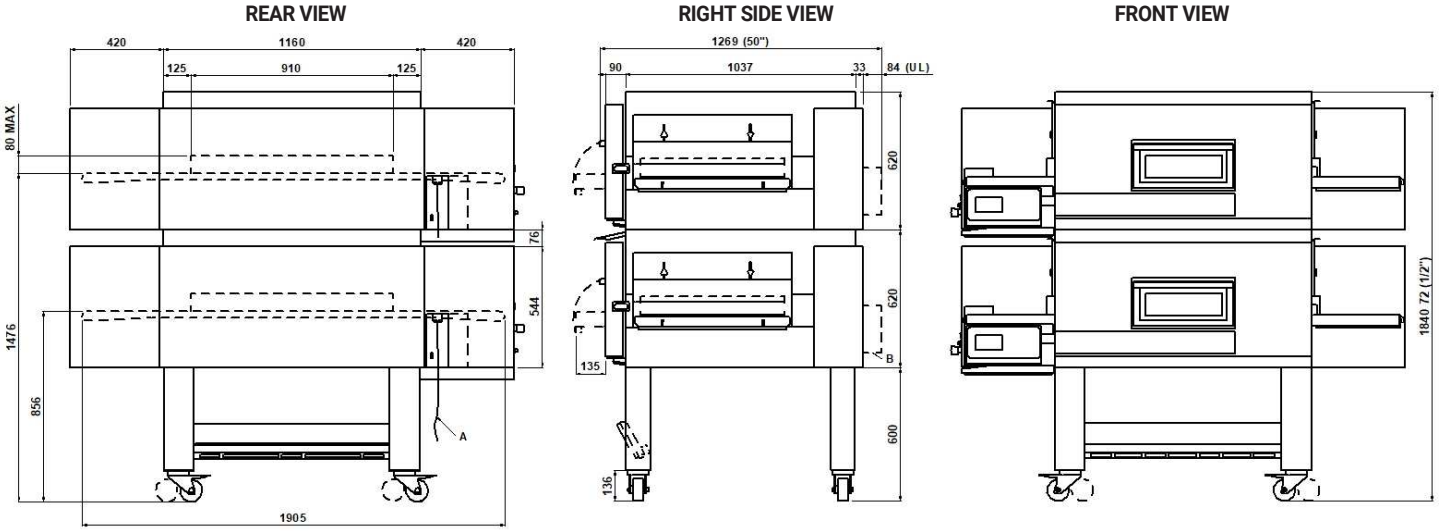

NOTE: The dimensions indicated in the views are in millimeters.

A	B		
Electrical cable length 2 meters	Only for UL model fairleads		

DIMENSIONS

External height.	1840mm
External depth	1185mm
External width	2050mm
Weight(excl.stand)	594kg

TOTAL BAKING CAPACITY

*N° Pizzas /hour	
Pizzas diameter 330mm	N°200
Pizzas diameter 450mm	N°76

SHIPPING INFORMATION

Packed oven (each packed deck)

Height	2x790mm
Depth	1325mm
Width	2152mm
Weight	(594+50)kg

Packaged stand dimensions:

Height	200mm
Depth	600mm
Width	1150mm
Weight	(28+2)kg

FEEDING AND POWER

Standard feeding
A.C. V400 3N
Feeding on request
A.C. V230 3

Frequency	50/60Hz
Max power	35,6kW
*Medium cons/hour	15,6kWh

Connecting cable for each chamber
type H07RN-F
5x6mm^2 (V400 3N)
4x10 mm^2 (V230 3)

*** This value is subject to variation according to the way in which the equipment is used**

NOTE: MORETTI FORNI S.P.A. reserves the right to modify the characteristics of the products illustrated in this publication without prior notice

serieT CONVEYOR | **TT96E**

INDUSTRY KITCHENS
www.industrykitchens.com.au 1800 611 058

MORETTI FORNI The SmartBaking Company®

3 baking chambers

(assembled with stand height 145mm)

REAR VIEW

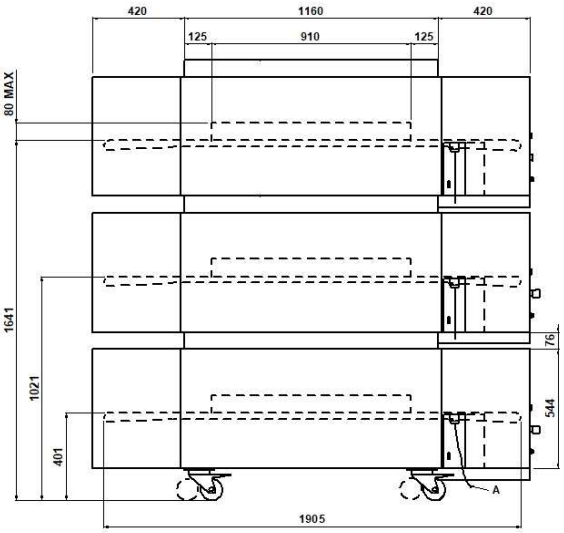

RIGHT SIDE VIEW

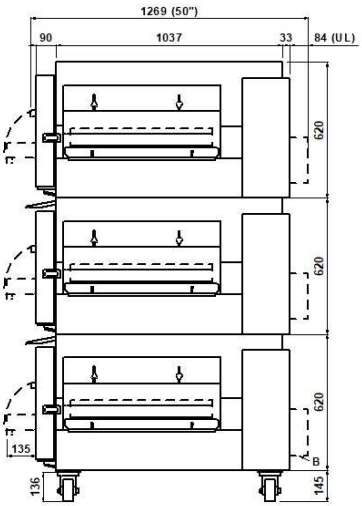

FRONT VIEW

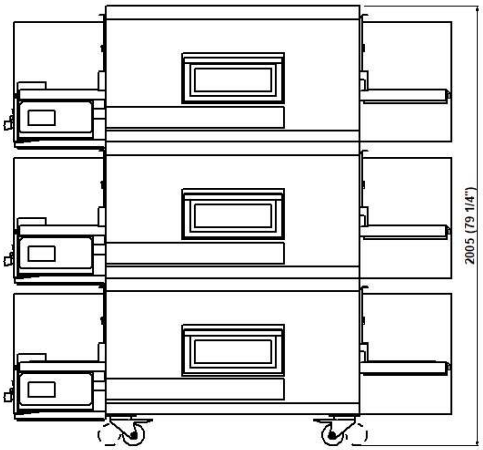

NOTE: The dimensions indicated in the views are in millimeters.

A	B		
Electrical cable length 2 meters	Only for UL model fairleads		

DIMENSIONS

External height.	2013mm
External depth	1185mm
External width	2050mm
Weight(excl.stand)	891kg

TOTAL BAKING CAPACITY

*N° Pizzas /hour	
Pizzas diameter 330mm	N°300
Pizzas diameter 450mm	N°114

SHIPPING INFORMATION

Packed oven (each packed deck)

Height	3x790mm
Depth	1325mm
Width	2152mm
Weight	(891+75)kg

Packaged stand dimensions:

Height	280mm
Depth	420mm
Width	270mm
Weight	(16+1)kg

FEEDING AND POWER

Standard feeding
A.C. V400 3N
Feeding on request
A.C. V230 3

Frequency	50/60Hz
Max power	53,4kW
*Medium cons/hour	23,4kWh

Connecting cable for each chamber
type H07RN-F
5x6mm^2 (V400 3N)
4x10 mm^2 (V230 3)

*** This value is subject to variation according to the way in which the equipment is used**

NOTE: MORETTI FORNI S.P.A. reserves the right to modify the characteristics of the products illustrated in this publication without prior notice

TECHNICAL DATA

ONLY FOR UL MODEL

FEEDING AND POWER (EACH DECK NEEDS TO BE CONNECTED INDEPENDENTLY AND THE LOAD SHOWN BELOW ARE PER DECK)	A.C. V240 3ph 60Hz	Standard feeding	Max power	kW	17,8
			*Medium cons/hour	kWh	7,8
			Ampère Max	A	45,1
			Connecting cable	AWG/DECK	6
	A.C. V208 3ph 60Hz	Feeding on request	Max power	kW	17,8
			*Medium cons/hour	kWh	7,8
			Ampère Max	A	51,6
			Connecting cable	AWG/DECK	6

*** This value is subject to variation according to the way in which the equipment is used**

NOTE: MORETTI FORNI S.P.A. reserves the right to modify the characteristics of the products illustrated in this publication without prior notice