DOWNLOAD
ALL TECHNICAL
DOCUMENTS

PASTRY, ICE CREAM & CHOCOLATE

ICE CREAM REFRIGERATED CABINET

GOLD - 700 - MOULDED TRAY HOLDER - MAXI ICE CREAM

Model:

GJCC080ABST

Refrigerated cabinets with monoblock ventilated refrigeration unit sized for climate class 5 (tropicalized). Easy-extraction unit for simple and fast maintenance/replacement. Evaporator coated by cataphoresis, automatic defrost managed by digital controller. Condensate water evaporated via AISI 316 low carbon anticorrosion coil. Reversible door with automatic closing and fixed 100° opening position. Seven-chamber magnetic gasket, easily removable. Flush-mounted capacitive LCD display. Adjustable stainless steel AISI 304 legs. Molded tray holder.

TECHNICAL DATA

Temperature (°C)	(-22/-18)
Energy class	D
Annual energy consumption AEC (kWh/annum)	2655
Energy efficiency index EEI	66,50
Daily energy consumption E24 h (kWh)	7,27
Gross volume (L)	561
Net chilling volume (L)	-
Net freezing volume (L)	511
Climate class	5 (+40 °C / 40% R.H.)
Refrigerant gas	R290
GWP	3
Refrigerant charge (kg)	0.074 Kg
Defrosting	HOT GAS
Condensate evaporation	Condensate water evaporation by means of anti-corrosion coil in low carbon AISI 316.
Condensation	AIR
Cooling output (W)	568
Voltage	AC230V 1N+E 50Hz
Special voltages (on request)	Option
Absorbed power (W)	580
Current draw (A)	3,30
Noise (dB)	< 70

CONSTRUCTION DATA

Category	Upright - High performance
Intended use	Storage - This appliance is intended for use in ambient temperatures up to 40 °C.
Internal material	AISI 304 Stainless steel
External material	AISI 304 Stainless steel
Internal corners	Rounded internal corners for easy and optimal cleaning.
Insulation thickness (mm)	80
Insulation material	HFO Polyurethane (No CFC, no HCFC)
Door seal	Seven-chamber magnetic gasket, easily removable
Door hinge	Standard left, reversible
Controller	Flush-mounted capacitive LCD display
Alarm	Visual and audible
NTC temperature probe	Standard
Floor support	Adjustable feet in AISI 304 stainless steel
Floor support height (mm)	Feet: 100-150 Castors: 110 - Ø 80 Plinth: 20

SEDE OPERATIVA / PLACE OF BUSINESS
Dalmec - Refrigeration - Via Fabio Filzi, 46 - 31036 Istrana (TV) – Italy
+39 0422 832679 / **info@dal-mec.it** / **www.dal-mec.it**

SEDE LEGALE / REGISTERED OFFICE
Dal Santo Srl - Via Sant'Anna, 38 - 31050 Fossalunga di Vedelago (TV) – Italy
Partita IVA / VAT number 04207260268

Il costruttore può apportare modifiche ai prodotti senza preavviso. / The manufacturer reserves the right to modify any product without prior notice. / Veranderungen an den produkten konnen vom hersteller ohne vorankundigung vorgenommen werden. / Des modifications aux produits peuvent etre apportees sans preavis du constructeur. / El fabricante se reserva el derecho de modificar cualquier producto sin previo aviso.

Unless stated otherwise, values are given in mm and are indicative and not binding.

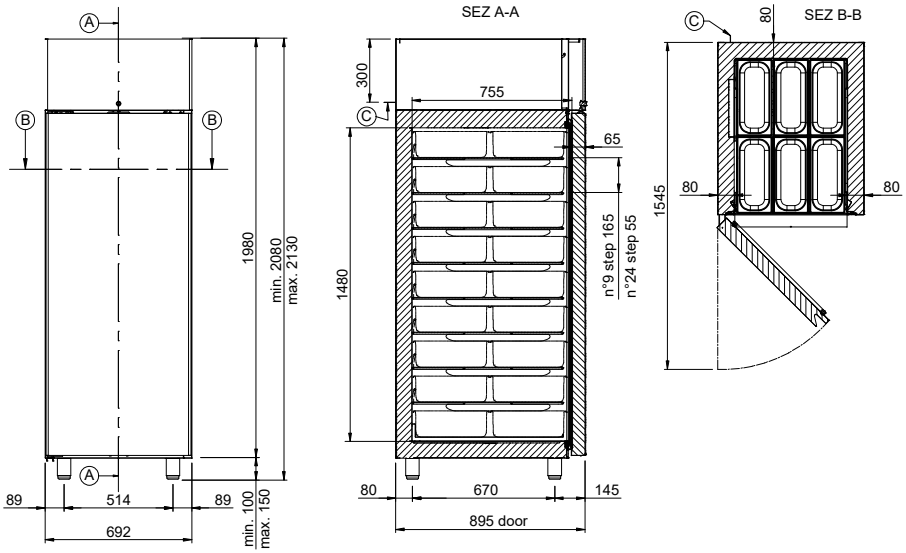

A. Section plane

B. Section plane

C. Power cable outlet (length 2 m)

WARNING! While installing, have a qualified electrician connect it to an electrical panel.

Minimum clearances

WARNING! The distance from hot appliances (e.g. fryers or ovens) must be at least 500 mm.

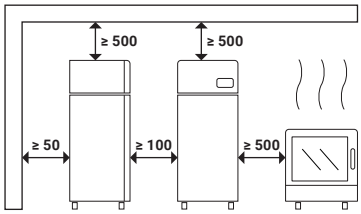

EQUIPMENT AND SETUPS

Internal setup	Moulded tray holder
Trays included	N.9 - 715x530 - Plastic coated
Maximum load per tray (kg)	58
Pairs of guides included	N.24 - GN 2/1 - 650x530
Maximum setup capacity	54 Pans H120
Light under control panel	Standard
LED bar	Option
Wi-Fi kit	Option
Bluetooth kit	Option
Lock with key	Standard
Air distribution duct	Standard
Door opening pedal	Standard
Castors kit	Option
Cable with Schuko or English plug	Standard (Schuko)
Diamond-patterned bottom with drainage hole	Standard

DIMENSIONS AND WEIGHTS

Dimensions LxDxH (mm)	692x895x2080-2130
Package LxDxH (mm)	760x940x2240
Net weight (kg)	157
Gross weight (kg)	174

SEDE OPERATIVA / PLACE OF BUSINESS
Dalmec - Refrigeration - Via Fabio Filzi, 46 - 31036 Istrana (TV) – Italy
+39 0422 832679 / **info@dal-mec.it** / **www.dal-mec.it**

SEDE LEGALE / REGISTERED OFFICE
Dal Santo Srl - Via Sant'Anna, 38 - 31050 Fossalunga di Vedelago (TV) – Italy
Partita IVA / VAT number 04207260268

Il costruttore può apportare modifiche ai prodotti senza preavviso. / The manufacturer reserves the right to modify any product without prior notice. / Veranderungen an den produkten konnen vom hersteller ohne vorankundigung vorgenommen werden. / Des modifications aux produits peuvent etre apportees sans preavis du constructeur. / El fabricante se reserva el derecho de modificar cualquier producto sin previo aviso.