DOWNLOAD
ALL TECHNICAL
DOCUMENTS

PASTRY, ICE CREAM & CHOCOLATE

ICE CREAM REFRIGERATED CABINET

GOLD - 900

Model:

GGCC090ABST

Refrigerated cabinets with monoblock unit and ventilated refrigeration system, designed for climate class 5 (tropicalised). Easily removable refrigeration unit for quick and simple maintenance/replacement. Cataphoresis-coated evaporator, automatic defrost managed by a digital controller. Condensate water evaporation through an anti-corrosion AISI 316 low carbon stainless steel coil. Reversible door with self-closing system and fixed opening position at 100°. Seven-chamber magnetic gasket, easily removable. Flush-mounted capacitive LCD display. Adjustable AISI 304 stainless steel feet. AISI 304 stainless steel tray runners and uprights – Adjustable and removable.

TECHNICAL DATA

Temperature (°C)	(-25/-18)
Energy class	D
Annual energy consumption AEC (kWh/annum)	2473
Energy efficiency index EEI	50,45
Daily energy consumption E24 h (kWh)	6,78
Gross volume (L)	851
Net chilling volume (L)	-
Net freezing volume (L)	696
Climate class	5 (+40 °C / 40% R.H.)
Refrigerant gas	R290
GWP	3
Refrigerant charge (kg)	0.100 Kg
Defrosting	HOT GAS
Condensate evaporation	Condensate water evaporation by means of anti-corrosion coil in low carbon AISI 316.
Condensation	AIR
Cooling output (W)	652
Voltage	AC230V 1N+E 50Hz
Special voltages (on request)	Option
Absorbed power (W)	860
Current draw (A)	4,70
Noise (dB)	< 70

CONSTRUCTION DATA

Category	Upright - High performance
Intended use	Storage - This appliance is intended for use in ambient temperatures up to 40 °C.
Internal material	AISI 304 Stainless steel
External material	AISI 304 Stainless steel
Internal corners	Rounded internal corners for easy and optimal cleaning.
Insulation thickness (mm)	80
Insulation material	HFO Polyurethane (No CFC, no HCFC)
Door seal	Seven-chamber magnetic gasket, easily removable
Door hinge	Standard left, reversible
Controller	Flush-mounted capacitive LCD display
Alarm	Visual and audible
NTC temperature probe	Standard
Floor support	Adjustable feet in AISI 304 stainless steel
Floor support height (mm)	Feet: 100-150 Castors: 160 - Ø 125 Plinth: 20

SEDE OPERATIVA / PLACE OF BUSINESS
Dalmec - Refrigeration - Via Fabio Filzi, 46 - 31036 Istrana (TV) – Italy
+39 0422 832679 / **info@dal-mec.it** / **www.dal-mec.it**

SEDE LEGALE / REGISTERED OFFICE
Dal Santo Srl - Via Sant'Anna, 38 - 31050 Fossalunga di Vedelago (TV) – Italy
Partita IVA / VAT number 04207260268

Il costruttore può apportare modifiche ai prodotti senza preavviso. / The manufacturer reserves the right to modify any product without prior notice. / Veranderungen an den produkten konnen vom hersteller ohne vorankundigung vorgenommen werden. / Des modifications aux produits peuvent etre apportees sans preavis du constructeur. / El fabricante se reserva el derecho de modificar cualquier producto sin previo aviso.

Unless stated otherwise, values are given in mm and are indicative and not binding.

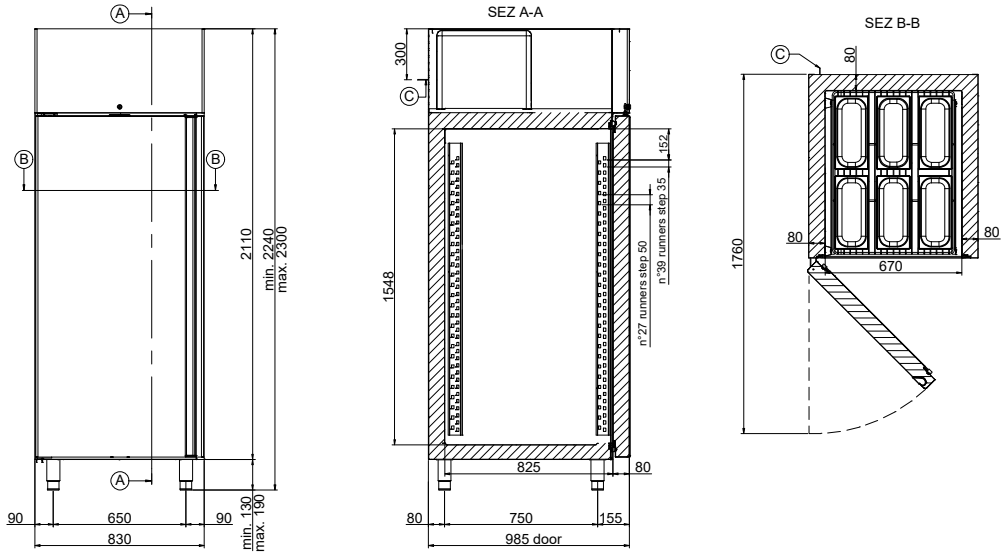

A. Section plane

B. Section plane

C. Power cable outlet (length 2 m)

WARNING! While installing, have a qualified electrician connect it to an electrical panel.

Minimum clearances

WARNING! The distance from hot appliances (e.g. fryers or ovens) must be at least 500 mm.

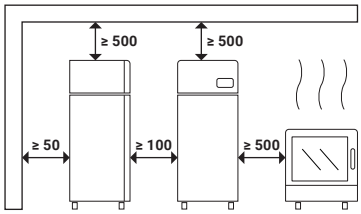

EQUIPMENT AND SETUPS

Internal setup	AISI 304 stainless steel tray runners and uprights – Adjustable and removable.
Trays included	N.10 - EN 600x800 - Plastic coated
Maximum load per tray (kg)	73
Pairs of guides included	N.10"C" - EN 600x800
Maximum setup capacity	60 Pans H120
LED bar	Standard
Wi-Fi kit	Option
Bluetooth kit	Option
Lock with key	Standard
Air distribution duct	Standard
Door opening pedal	Standard
Castors kit	Option
Cable with Schuko or English plug	Standard (Schuko)
Diamond-patterned bottom with drainage hole	Standard

DIMENSIONS AND WEIGHTS

Dimensions LxDxH (mm)	830x985x2240-2300
Package LxDxH (mm)	860x1030x2430
Net weight (kg)	188
Gross weight (kg)	210

SEDE OPERATIVA / PLACE OF BUSINESS
Dalmec - Refrigeration - Via Fabio Filzi, 46 - 31036 Istrana (TV) – Italy
+39 0422 832679 / **info@dal-mec.it** / **www.dal-mec.it**

SEDE LEGALE / REGISTERED OFFICE
Dal Santo Srl - Via Sant'Anna, 38 - 31050 Fossalunga di Vedelago (TV) – Italy
Partita IVA / VAT number 04207260268

GGCC090ABST

Il costruttore può apportare modifiche ai prodotti senza preavviso. / The manufacturer reserves the right to modify any product without prior notice. / Veranderungen an den produkten konnen vom hersteller ohne vorankundigung vorgenommen werden. / Des modifications aux produits peuvent etre apportees sans preavis du constructeur. / El fabricante se reserva el derecho de modificar cualquier producto sin previo aviso.