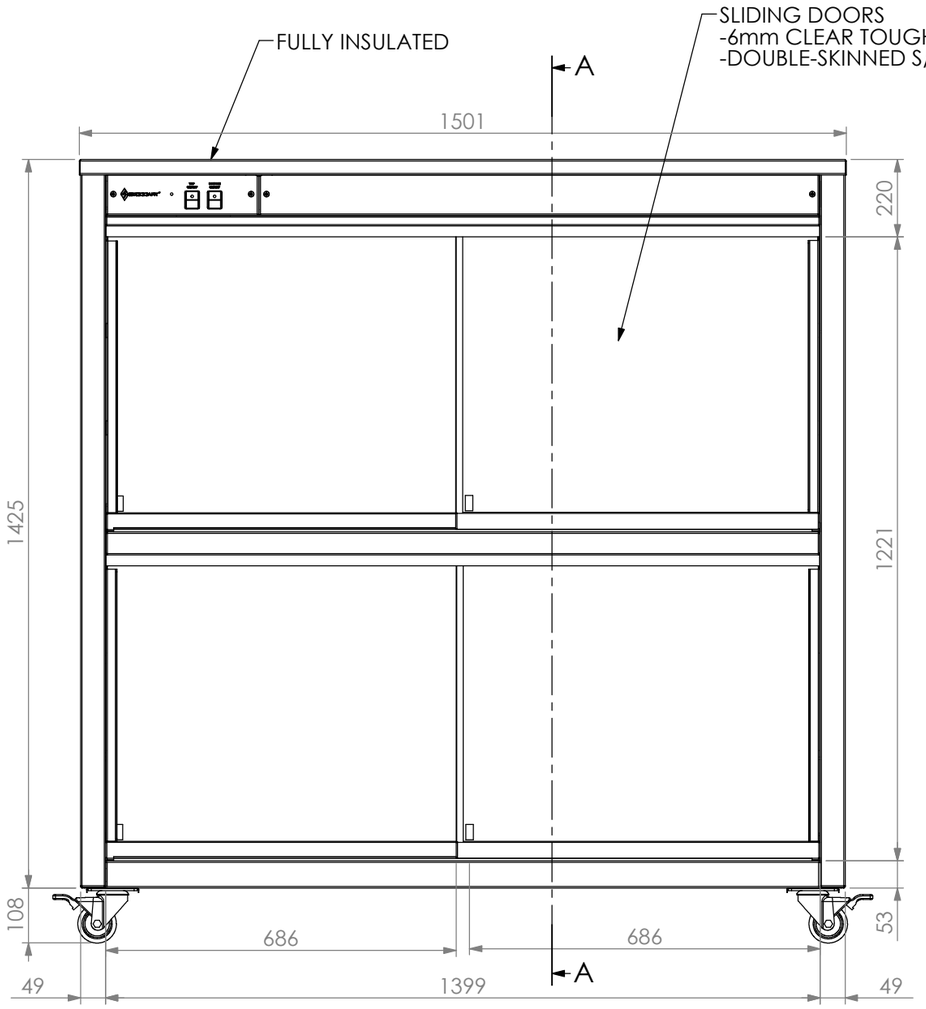

FRONT VIEW

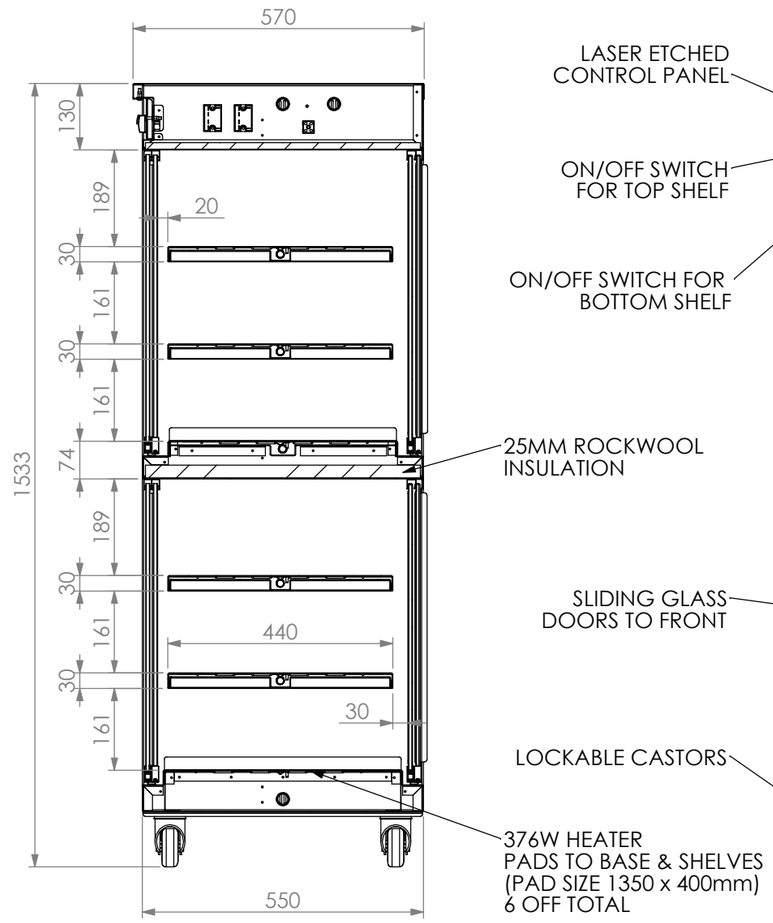

SECTION A-A

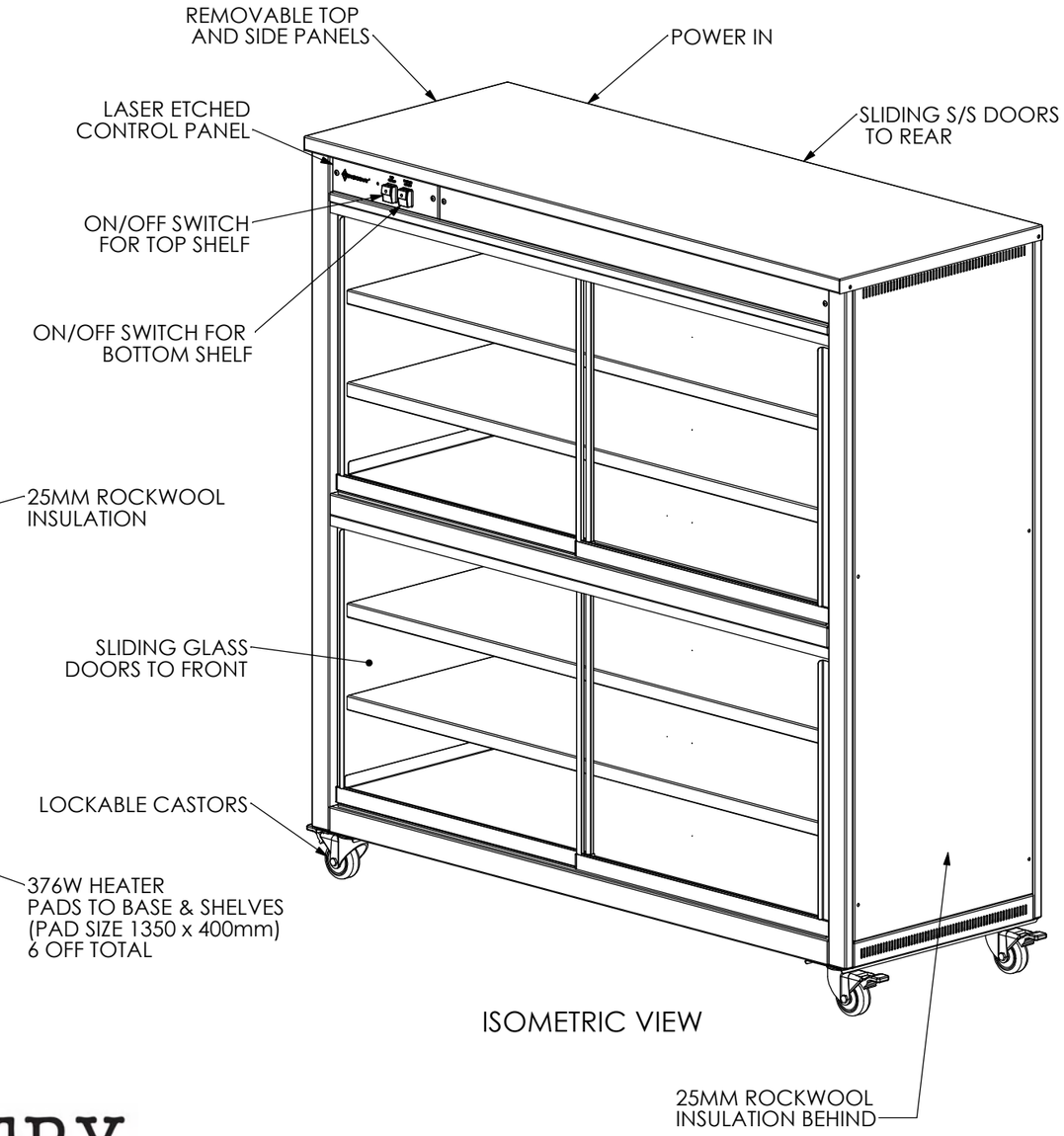

ISOMETRIC VIEW

Product Details

Construction	: 1.2mm 304 No.4 S/S
Electrical Connection	: 10Amp 3-Pin Plug and 1.5m Lead (supplied)
Electrical Rating	: 240V, 9.4A, 2256W
Unit Controls	: On/Off Switch for Top & Bottom Shelf
Capacity	: 24 Pizzas - 4 per Shelf
Pizza Box Dimensions	: 325mm W x 325mm D x 50mm H

INDUSTRY KITCHENS

www.industrykitchens.com.au 1800 611 058

STODDART

www.stoddart.com.au

	NAME	CHECKED	DATE	UNLESS OTHERWISE SPECIFIED: DIMENSIONS ARE IN MILLIMETERS
DRAWN	M Sheehan		28/02/2023	
APPV'D	M Rattray		1/03/2023	MATERIAL: 304 S/S
Weight: 226.29 kg				THICKNESS:
Surface Area: 61.60 M2				FINISH: N4 & Powdercoat

PART No: **CH-PHH-6-GS A3**

DESCRIPTION: Culinaire;Pizza Hot Hold;6 Shelf;Mobile

DWG No: CH-PHH-6-GS-d01 A3

Dwg. Issue 3

DO NOT SCALE DRAWING This drawing remains the property of Tom Stoddart Pty Ltd ABN 16 009 690 251 & cannot be reproduced without prior permission. A3 Sheet 1 of 20

File Location: G:\03_Engineering\Culinaire\CH-Heated\CH-PHH-xxx - Culinaire;Pizza Hot Holds\01_Solidworks\CH-PHH-6-GS Culinaire;Pizza Hot Hold;6 Shelf;Mobile\