# Glass & Jug Rinsers

WMTS 101
040292

INDUSTRY KITCHENS
www.industrykitchens.com.au 1800 611 058

## Glass/Milk Jug Rinser Compact

2 YEAR WARRANTY

### R-PR-SJ150

- 114mm star diameter
- 1/2" MI BSP connection
- Includes drain elbow
- Easy installation
- Actuator star design helps to prevent the build up of milk residue
- No sharp edges; corners are rounded for safety
- Minimum temperature - 5° celsius
- Maximum temperature - 55° celsius
- 304 stainless steel tray
- Watermarked

Top

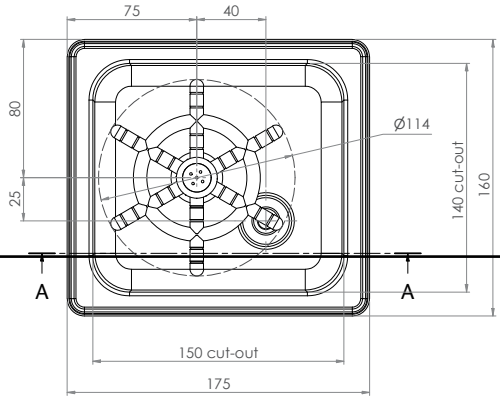

**R-PRP-GRVKIT**

**R-PRP-ACTSTAR**
(Stainless steel option available)

**R-PRP-OUTLET**

Side

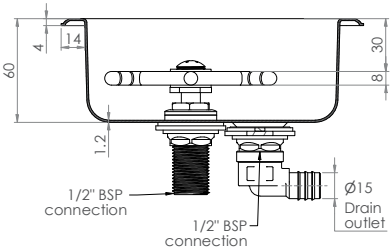


* Exclusions apply.