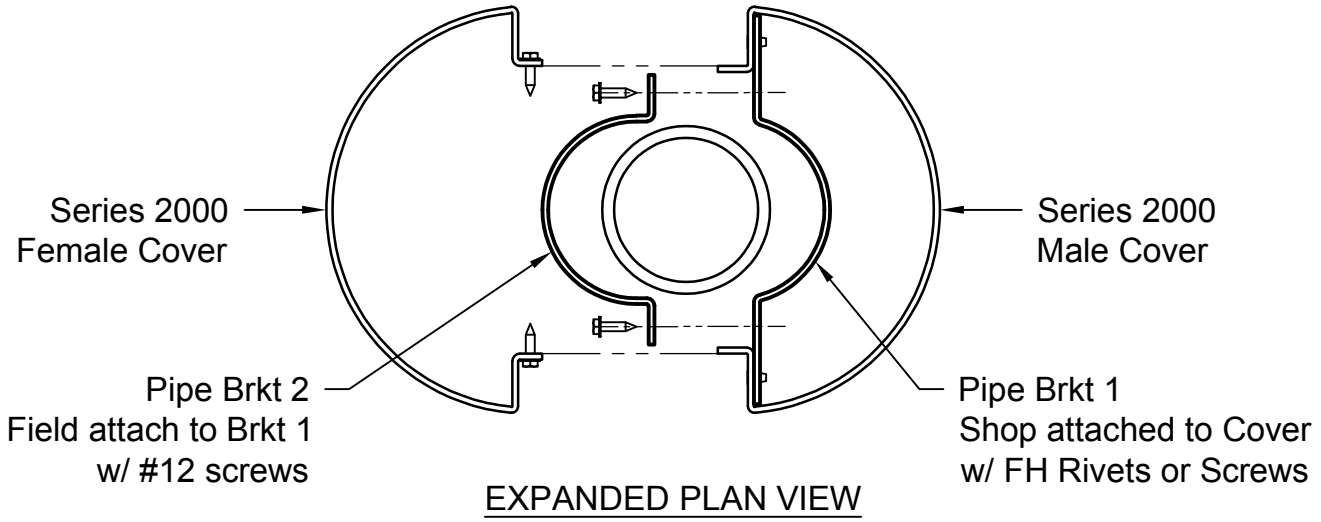

EXPANDED PLAN VIEW

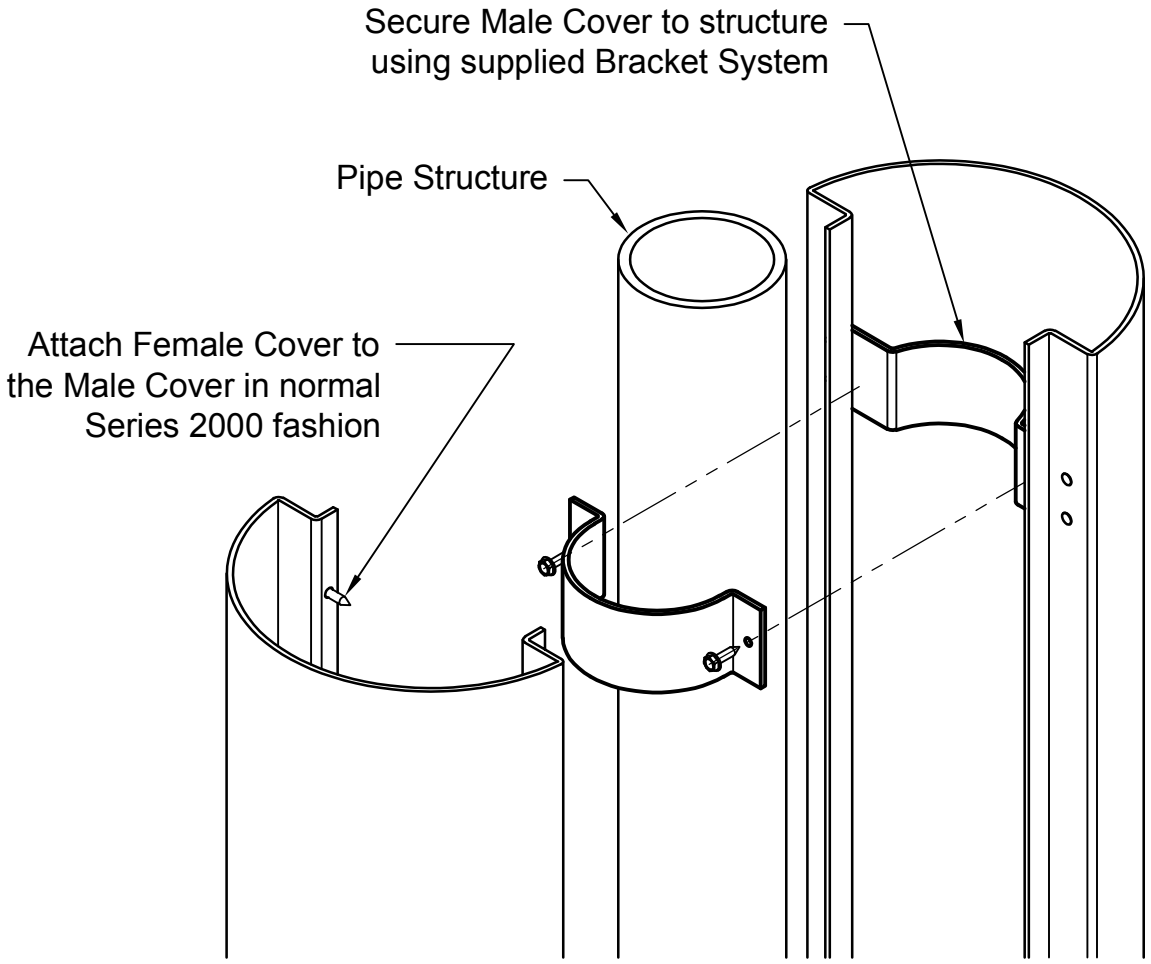

EXPANDED AXO VIEW

SAF Metal Fabrication
8370 HIGHWAY 78 www.saf.com PHONE: (770) 942-1207
VILLA RICA, GEORGIA 30180 FAX: (877) 949-4759

Series 2000 Pipe Bracket

SCALE: NTS | 23 JUN 2016 | SAF Xpressions