willow

MORE STYLE, MORE CARE

INSTALLATION AND OPERATING INSTRUCTIONS



WE50SSB/WE50SSW - SINGLE CAVITY COOKER

Please read before attempting to install or use this appliance.
It is recommended that you keep this user manual in a safe place.

WELCOME

Thank you for choosing Willow for your new appliance. Your item is pre-registered and your warranty starts from the point of purchase; all you need to do is keep hold of your proof of purchase.

We are proud to provide a range of appliances that have been designed with the consumer in mind. Our products are not only stylish but reliable, easy to use and are guaranteed to give you years of issue-free use.

Although you may already be familiar with a similar product, we recommended that you take the time to carefully read over these instructions before installation and use. This will ensure that you get the most from your purchase.

It is recommended that you keep this user manual in a safe place for future reference along with your proof of purchase and the product's serial number.

willow

Willow is a UK household electrical appliance company, based in Staffordshire.

Willow Appliances Limited
Registered in England & Wales company number 12117113
Unit 7 Wellington Crescent, Fradley Park, Lichfield, Staffordshire, WS13 8RZ

After Sales Support: 01759 487837
General Enquiries: 0330 0564 777
sales@willowappliances.co.uk
support@willowappliances.co.uk

willow

Instruction Manual
Model: WE50SSW
WE50SSB



You'll soon be enjoying your new Freestanding Cooker

It all begins here, with your instructions. Don't worry, there's nothing too technical coming up. Just simple, step-by-step guidance to get you up and running quickly. Sound good? Then let's get started.

Contents

1 Safety information

Safety information 6

2 Getting to know your Freestanding Cooker

Overview 11

Accessories 12

3 Installing your Freestanding Cooker

Installation requirements 14

Electrical connection 15

4 Using your Freestanding Cooker

ControlPanel 18

Oven functions 19

General oven and cooking tips 20

Practical Cooking Advice 21

Using the hotplates of your cooker 23

5 Care and Maintenance

Cleaning 26

Replacing oven lamps 27

How to remove the oven doors 27

Technical specification 28

Energy fiche 29

Circuit Diagram 30

6 Product support

Troubleshooting 32

Help and assistance 33

Declaration of conformance to product standards 34

Disposal 34

1 Safety information

Safety information

Important - Please read these instructions fully before installing or operating

INSTALLATION WARNINGS

IMPORTANT: Prior to Installation ensure that the local supply conditions (electricity voltage and frequency) are compatible with the requirements of your freestanding cooker.

IMPORTANT: Carefully unpack and examine the appliance for any damage. If you think there is a defect, do not use the appliance and contact Product Support on 01759 487837. Packaging materials should be collected together and disposed of immediately as they maybe harmful to children.

IMPORTANT: Keep the electrical cable (not supplied) of your freestanding cooker away from the hot areas of your appliance, do not let the cable touch the appliance. Keep the cable away from sharp edges and heated surfaces.

IMPORTANT: Ensure that the electric supply cable is not trapped or damaged during installation.

IMPORTANT: In the event that the cable connecting your freestanding cooker becomes damaged, it must be replaced by a suitably qualified person. This cable must not be replaced by an unauthorised person.

IMPORTANT: Protect your freestanding cooker against atmospheric effects. Do not expose your cooker to effects such as sun, rain, snow etc.

IMPORTANT: The materials surrounding the appliance (cabinets) must be able to withstand a minimum temperature of 100°C.

IMPORTANT: When using your oven for the first time your cooker may give off an unusual odour from the heating elements and

DURING USAGE

IMPORTANT: This appliance can be used by children aged from 8 years and above and persons with reduced physical, sensory or mental capabilities or lack of experience and knowledge if they have been given supervision or instruction concerning use of the appliance in a safe way and understand the hazards involved. Children shall not play with the appliance. Cleaning and user maintenance shall not be made by children without supervision.

WARNING: The appliance and its accessible parts become hot during use. Care should be taken to avoid touching heating elements.

WARNING: NEVER try to extinguish a cooking fire with water. Instead switch off the appliance and cover flame e.g with a lid or a fire blanket.

CAUTION: Do not allow children in the kitchen when cooking or after, as the parts may still be hot. Many parts of the cooker will become hot and present a considerable hazard to children.

CAUTION: When the cooker is hot never touch the oven glass by hand or with tools.

CAUTION: Before starting to use your appliance, ensure curtains, paper or flammable items are kept away from your appliance. Do not keep flammable materials inside of or around your cooker.

CAUTION: Take care when closing the oven door that there is nothing obstructing it from closing as this may break the glass door.

IMPORTANT: When using the grill the oven door must be kept closed.

insulation materials. To eliminate this odour run the oven at 250 degrees for 40-60 minutes with the oven empty.

WARNING: Before obtaining access to terminals, all supply circuits must be disconnected.

IMPORTANT: Make sure the oven control knobs are all in the off position when not in use.

IMPORTANT: If you do not intend to use your builtin oven for a long period of time then turn off the electric supply to the oven.

GENERAL SAFETY WARNINGS

IMPORTANT: This appliance has been designed for non-professional, domestic use only. Do not use this oven for commercial use or any other application e.g room heating.

WARNING: Danger of fire: do not store flammable items on or near the cooking surfaces or inside the oven.

IMPORTANT: Do not try to lift or move this appliance by pulling on the door handle.

WARNING: Ensure that the appliance is switched off before replacing the lamp to avoid the possibility of electric shock.

IMPORTANT: Your appliance is produced in accordance with all applicable local and international standards and regulations.

IMPORTANT: Maintenance and repair work must only be performed by authorised service technicians. Installation and repair work that is carried out by unauthorised technicians is dangerous and could invalidate your guarantee.

IMPORTANT: When the door of the oven is open, do not hang or lean anything on it. You may unbalance your appliance or damage the door or door hinges.

IMPORTANT: Do not hang towels, dishcloths or clothes from the cooker or its handles.

CLEANING AND MAINTENANCE

IMPORTANT: Always turn the appliance off before operations such as cleaning or maintenance. You can do this by switching the freestanding cooker off using the cooker isolation switch

IMPORTANT: Do not remove the control knobs to clean the control panel.

WARNING: Do not use harsh abrasive cleaners or sharp metal scrapers to clean the oven door glass since they can scratch the surface, which may result in shattering of the glass.

WARNING: Do not clean your oven with a steam cleaner.

TO MAINTAIN THE EFFICIENCY AND SAFETY OF YOUR APPLIANCE, WE RECOMMEND YOU ALWAYS USE OUR AUTHORISED SERVICE AGENTS AND ORIGINAL SPARE PARTS.

FOR ASSISTANCE CALL PRODUCT SUPPORT 01759 487837.

Getting to know your Freestanding Cooker 2

Getting to know your Freestanding Cooker

You'll be up and running in no time

Ready? Let's begin...

Please read these instructions carefully. They contain important information which will help you get the best from your freestanding cooker and ensure safe and correct installation and operation.

If you require any further assistance, our technical experts are happy to help. For full details, refer to the product support section at the end of these instructions.

Getting to know your Freestanding Cooker

You'll be up and running in no time

Overview

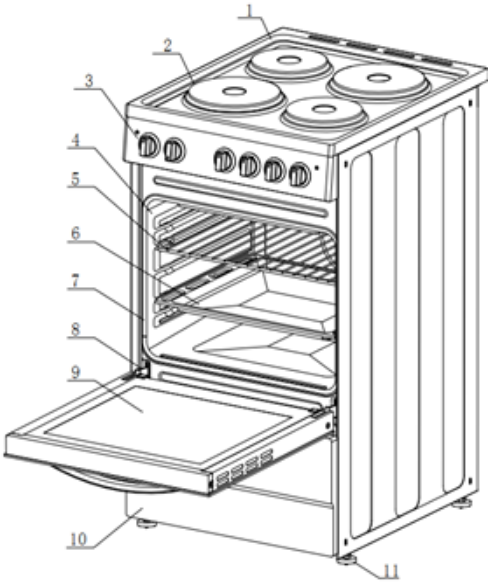

1. Hob plate
2. Electric furnace
3. Control panel
4. Shelf positions
5. Wire Shelf
6. Baking tray
7. Door seal
8. Hinge
9. Oven door
10. Downside panel
11. Anti slip feet
12. Small hot plate
13. Big hot plate

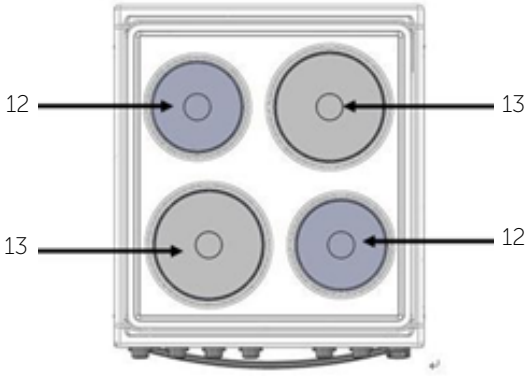

Getting to know your Freestanding Cooker

You'll be up and running in no time

Accessories

1. 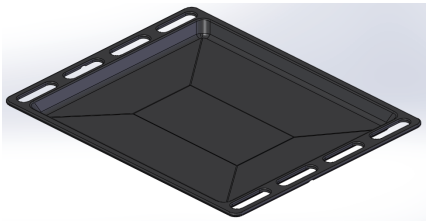

Baking tray x 1

2. 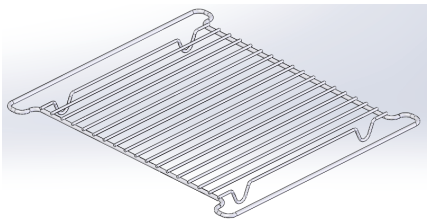

Grill insert x 1

3. 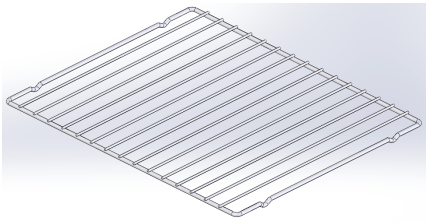

Chrome shelves x 1

4. 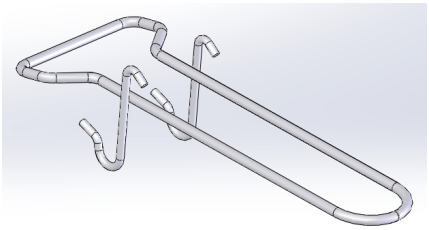

Grill pan handle x 1

Installing your Freestanding Cooker 3

Installing your Freestanding Cooker

Bringing it all together

Installation requirements

THIS COOKER MUST BE INSTALLED BY A QUALIFIED INSTALLER IN ACCORDANCE WITH LOCAL REGULATIONS

IMPORTANT: CONTACT AN AUTHORISED SERVICE AGENT FOR INSTALLATION OF YOUR OVEN!

First Use

IMPORTANT: When using your oven for the first time your cooker may give off an unusual odour from the heating elements and insulation materials. This is normal for new cookers. To eliminate this odour run the oven at 250 degrees for 40-60 mins with the oven empty.

Unpacking

Carefully unpack and examine the appliance for any damage. If you think there is a defect, do not use the appliance and contact Support service centre.

Positioning

1. Make sure that there are no combustible or flammable materials, such as curtains, in the vicinity of the installation.

2. Furniture and cabinets surrounding the cooker must be of material resistant to temperatures greater than 100°C.

3. Surrounding furniture, cabinets and extractor fans should be positioned in accordance with the diagram shown in the figure

4. There must be at least 2cm of free space between the back wall and the rear of the appliance to allow for ventilation and air circulation.

5. If fitted, the extractor fan must be at least 65cm above the hotplates. If no fan is fitted the minimum distance between the hotplates and any cabinet or other structure must be 75cm.

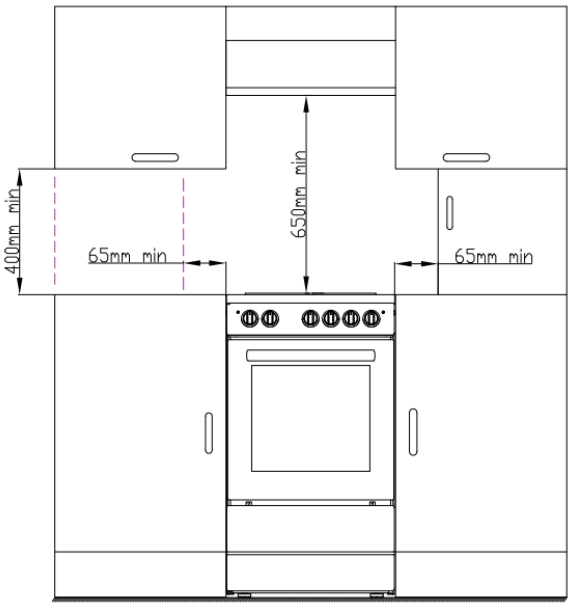

Installing your Freestanding Cooker

Bringing it all together

Levelling feet

The height and level of the appliance can be adjusted by rotating the feet located underneath the appliance at each corner. Rotate the feet to decrease or increase the height.

Safety chain

The appliance must be secured against overbalancing by using the supplied two safety chains on your oven.
Fasten hook (1) by using a proper peg to the kitchen wall (5) and connect safety chain (3) to the hook via the locking mechanism (2).

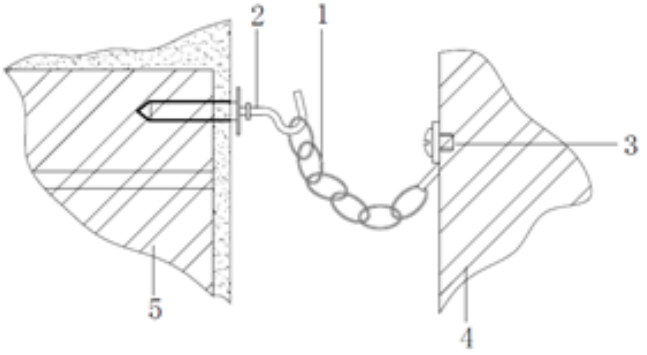

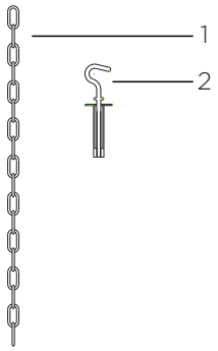

1	Safety chain(supplied and mounted to oven)
2	Stability hook
3	Firmly fix chain to cooker rear
4	Rear of cooker
5	Kitchen wall

Installing your Freestanding Cooker

Bringing it all together

Electrical connection

IMPORTANT: Electrical connections must be carried out by a suitably qualified person and in accordance with all relevant local building and installation regulations.

Fitting on a Power Supply Cable

Connecting appropriate power supply · terminal board/ connector block:

- Using a screwdriver ,prize open tabs of the Terminal board cover.
- Remove the wire clamp screw.
- Fasten the wires beneath the corresponding screw heads.
- Fasten cable clamp and close the cover of the terminal board.
- The ac power supply should be 220-240 V, 50/60 Hz. For electric cookers, the minimum 45A fuse, or at least 45A a distribution circuit breaker.

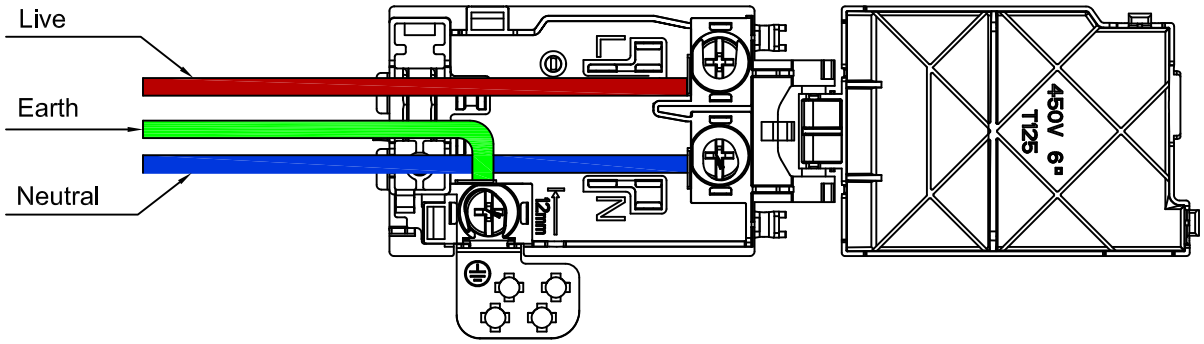

Warning: Connect the power cord must be in accordance with the instructions listed in the table below

Wire cross-sectional area(mm2)	L	N	E
Connectionmode			
1N-	**Min4**	**Min4**	**Min4**

Connecting the supply cable to the mains

Install an approved circuit breaker with a minimum contact opening of 3 mm, between the appliance and the mains fuse box .The circuit breaker should be sized according to the load and should comply with current regulations (the earth wire should not be interrupted by the circuit breaker).

The supply cable should be positioned so that it does not reach a temperature of more than 50 °Cwith respect to the room temperature, anywhere along its length Before switching fuse ON in meter-box check:

- Earth continuity. The electrical safety of this appliance can only be guaranteed if the cooker is correctly installed and earthed, in compliance with regulations on electrical installations.
- The electrical capacity of the system and sockets will support the maximum power of the appliance, as indicated on the data plate

4 Using your Freestanding Cooker

Using your Freestanding Cooker

Getting the most from your appliance

Control panel

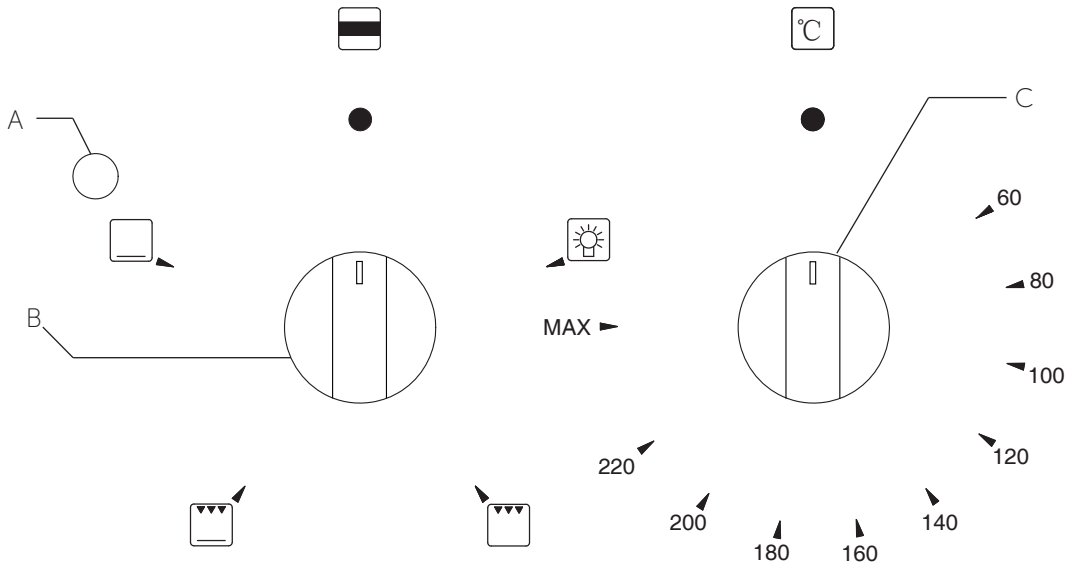

A Indicator lamp for oven
•Lamp is on when oven element is heating up oven or cycling on.

B Function switch Control Knob
• Sets Oven Function/ Mode.

C Oven Temperature Control Knob
• Sets temperature for baking.

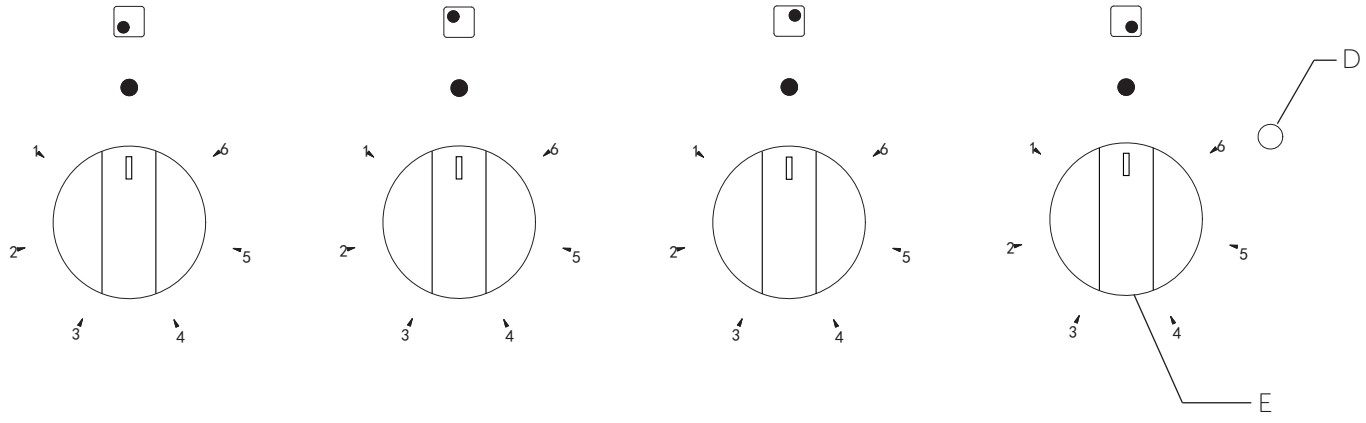

D Hotplate Indicator Lamp
• Comes on when a hotplate is turned on.

E Hotplate Control Knob - can be rotated in either direction
• Adjusts temperature of hotplate.

Using your Freestanding Cooker

Getting the most from your appliance

Oven functions


Oven light


Grill


Top & Bottom element


Bottom element

Oven light-The oven light will operate on all oven functions

Grill-The top central heating elements comes on .The extremely high and direct temperature of the grill makes it possible to brown the surface of meats and roasts while locking the juices in to keep them tender. The grill is also highly recommended for dishes that require a high temperature on the surface: beef steaks, veal, rib steak, fillets, hamburgers etc.

Top & Bottom Element-Hot air comes from the upper and lower element in the oven. This is the conventional cooking method that cooks your food equally. Joints of meat will benefit using this cooking function, and any roasted items.

Bottom Element-Bottom element cooking is used for foods that typically need cooking from the underneath side. Cakes and bread as an example can be cooking using this function mode.

Using your appliance for the first time

The first time you use your appliance, we recommend that you set the temperature setting to the highest mark. Set the cooking mode selection knob to a cooking mode and leave the oven on for about half an hour with nothing in it and the oven door shut. Then, open the oven door and allow the oven to cool. Any odour that may be detected during this initial use is due to the evaporation of substances used to protect the oven during storage.

Using your Freestanding Cooker

Getting the most from your appliance

General oven and cooking tips

General Oven Tips

The wire shelves should always be pushed firmly to the back of the oven.
Baking trays with food cooking on them should be placed level with the front edge of the oven's wire shelves. Other containers should be placed centrally. Keep all trays and containers away from the back of the oven, as over-browning of the food may occur.
For even browning, the maximum recommended size of a baking tray is 340 mm (13½") by 340 mm (13½").
When the oven is on, do not leave the door open for longer than necessary, otherwise the knobs may get very hot.

- Always leave a ''finger's width'' between dishes on the same shelf. This allows the heat to circulate freely around them.
- To reduce fat splashing when you add vegetables to hot fat around a roast, dry them thoroughly or brush lightly with cooking oil.
- Where dishes may boil and spill over during cooking, place them on a baking tray.

Using your Freestanding Cooker

Getting the most from your appliance

Practical Cooking Advice

The oven offers a wide range of alternatives which allow you to cook any type of food in the best possible way. With time you will learn to make the best use of this versatile cooking appliance and the following directions are only a guideline which may be varied according to your own personal experience.

Preheating

The oven must be preheated (this is generally the case when cooking leavened foods).
Once the food has been placed in the oven, the most appropriate cooking mode can then be selected.

Using the Grill

Use the "grill "mode placing the food under the center of the grill (situated on the 3rd or 4th rack form the bottom)because only the central part of the top heating element is turned on .
Use the bottom rack (1st from the bottom), placing the dripping pan provided to collect any sauce and /or grease and prevent the same from dripping onto the oven bottom. When using this mode, we recommend you set the thermostat to the highest setting. However, this does not mean you cannot use lower temperatures, simply by adjusting the thermostat knob to the desired temperature.
When using this mode ,we advise you to set the thermostat to 200 ℃, as it is the most efficient way to use the grill ,which is based on the use of infrared rays .However, this does not mean you cannot use lower temperatures, simply by adjusting the thermostat knob to the desired temperature.
Therefore the best results when using the grill modes are obtained by placing the grid on the lower racks (see cooking table) then, to prevent fat and grease from dripping onto the bottom of the oven and smoke from forming, place a dripping-pan on the 1st oven rack from the bottom.

Baking Cakes

When baking cakes, always place them in a preheated oven .Make sure you wait until the oven has been preheated thoroughly (the pilot lamp will turn off). Do not open the oven door during baking to prevent the cake from dropping .In general:

Pastry is too dry

Increase the temperature by 10 ℃ and reduce the cooking time .

Pastry dropped

Use less liquid or lower the temperature by 10 ℃.

Pastry is too dark on top

Place it on a lower rack, lower the temperature, and increase the cooking time.

Cooked well on the inside but sticky on the outside

Use less liquid, lower the temperature, and increase the cooking time.

The Pastry sticks to the pan

Grease the pan well and sprinkle it with a dusting of flour or use greaseproof paper.
I used more than one level and they are not all at the same cooking point
Use a lower temperature setting .It is not necessary to remove the food from all the racks at the same time. **Cooking Fish and Meat**

When cooking white meat ,fowl and fish ,use temperature setting from 180 ℃ to 200 ℃.
For red meat that should be well done on the outside while tender and juicy in the inside ,it is a good idea to start with a high temperature setting (200 ℃ -220 ℃) for a short time ,then turn the oven down afterwards.
In general, the larger the roast, the lower the temperature setting. Place the meat on the center of the grid and place the dripping pan beneath it to catch the fat.
Make sure that the grid is inserted so that it is in the center of the oven .If you would like to increase the amount of heat from below, use the low rack heights .For savory roasts (especially duck and wild game), dress the meat with lard or bacon on the top.

Using your Freestanding Cooker

Getting the most from your appliance

Selector knob setting	Food to be cooked	Weight (in kg)	Cooking rack position from bottom	Preheating time (Minutes)	Thermostat knob setting	Cooking time (Minutes)
Convection 	Duck	1	3	15	200	65-75
	Roast veal or beef	1	3	15	200	70-75
	Pork roast	1	3	15	200	70-80
	Biscuits (short pastry)	-	3	15	180	15-20
	Tarts	1	3	15	180	30-35
Grill 	Soles and cuttlefish	1	4	5	Max	8-10
	Squid and prawn kebabs	1	4	5	Max	6-8
	Cod filet	1	4	5	Max	10
	Grilled vegetables	1	3/4	5	Max	10-15
	Veal steak	1	4	5	Max	15-20
	Cutlets	1	4	5	Max	15-20
	Hamburgers	1	4	5	Max	7-10
	Mackerels	1	4	5	Max	15-20
	Toasted sandwiches	-	4	5	Max	2-3
	Veal on the spit	1.0	4	15	200	30-40
	Chicken on the spit	1.5	4	15	200	30-40
	Lamb on the spit	1.0	4	15	200	30-40

NB: cooking times are approximate and may vary according to personal taste. Shelf position is counted from the bottom shelf up. Bottom shelf position is 1.Turn down temperatures shown

Using your Freestanding Cooker

Getting the most from your appliance

Using the hotplates of your cooker

Hotplates safety warnings

- Do not use pots and pans which are unsteady, as these could overbalance.
- Do not use mats, heat diffusers or wok stands. These will cause a temperature build-up which can damage the cook top.
- Do not let cooking pots overhang sides or front of hob get too close to the hotplate control knobs.

Choosing Cooking Pots

Look at this diagram below which shows you which utensils to use on the hotplates and which utensils should not be used.

- Always use pots and pans with flat bottoms. Uneven or thin bottoms will waste energy and cook slowly.
- Always use pots and pans which are slightly larger than the hotplate. Small pans waste energy.
- Always put dry pots and pans on the hotplates.
- Do not use pots and pans which are too large. Pans which overhang the hotplate more than 50 mm can damage the hob

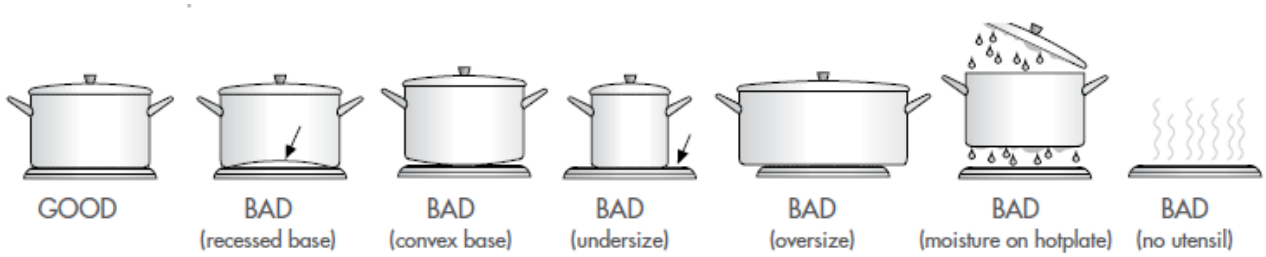

Using the hotplates of your electric cooker

Check the hotplates on your cooker against the diagrams below before you use your cooker for the first time.

Solid hotplates

- The strong solid-cast hotplates give wide contact for fast, efficient cooking.
- The hotplates are sealed all around which means that spilt liquids do not go under the hotplates.

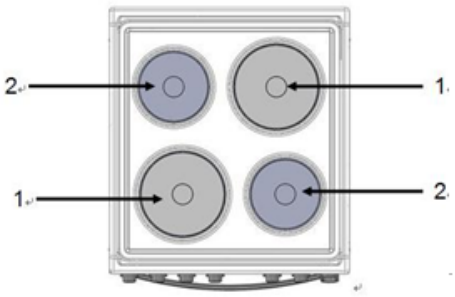

Before first use

- The top surface of the hotplates are sealed with a heat resistant coating. Before using for the first time the hotplates should be heated for a short period without a pan to harden the protective coating.
- Turn the heat setting to high for approx 3 minutes to fully harden the coating. When the hotplates have cooled apply a thin coating of cooking oil to the hotplate to seal and protect the surface.

5 Care and Maintenance

Care and maintenance

Looking after your appliance

Cleaning

WARNING! Isolate the power supply to the appliance and make sure that the cooker is cool.
Before cleaning your cooker or performing maintenance, make sure that the cooking mode selection knob and the cooking temperature selection knob is set to 'OFF'. To extend the life of your cooker, it must be cleaned frequently. The inside of the cooker should preferable be cleaned immediately after use, when it is still warm (but not hot), with warm water and soap. The soap should be rinsed away and the interior dried thoroughly. Avoid using abrasive detergents, scourers, acidic cleaners such as lime scale remover, etc, as these could damage the enamel, and can result in development of rust and corrosion. If stains are particularly tough to remove, use cleaners specifically recommended to clean cookers and follow the instructions provided with the cleaner.

Never use steam cleaner for cleaning inside the cooker.

Do not clean using caustic creams, abrasive cleaning powders, thick wire wool or hard tools. Enamelled parts of the cooker can be damaged if excess cleaning liquids are not immediately removed.

After cleaning the interior parts of the cooker with a soapy cloth, rinse it and then dry thoroughly with a soft cloth.

Clean the glass surfaces with special glass cleaning agents.

Never use flammable agents like acid, thinner or petrol when cleaning your appliance.

Do not clean your cooker with a steam cleaner.

Do not wash any part of your cooker in a dishwasher.

Enamelled Parts:
In order to keep enamelled parts as new, it is necessary to clean them frequently with mild warm soapy water and then dry with a cloth. Do not wash them while hot and never use abrasive powders or abrasive cleaning materials. Do not leave anything spilled onto enamelled parts for long periods of time.

Stainless Steel:
Stainless steel parts must be cleaned frequently with mildly warm soapy water and a soft sponge and then dried with a soft cloth. Do not use abrasive powders or abrasive cleaning materials. Do not leave anything spilled onto stainless steel parts for long periods of time.

Care and maintenance

Looking after your appliance

Replacing the oven lamps

Replacement lamps are available from our support team. Please call 01759 487837.

Light source shall be replaced by professional.

WARNING: Ensure that the appliance is switched off before replacing the lamp to avoid the possibility of electric shock.

Remove the glass cover of the lamp-holder as shown below.

Remove the lamp and replace with a lamp resistant to high temperatures (300°C) with the following characteristics:

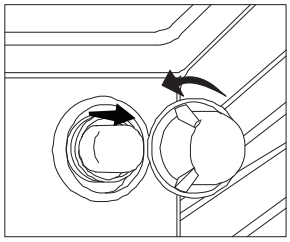

- Voltage: 220-240V
- Wattage: 25W
- Type: G9 (Halogen lamp)
- Energy efficiency class : G

Replace the glass cover and reconnect the oven to the mains power supply.

WARNING: Please do not use screwdrivers or other utensils to remove the light cover. This could damage the enamel of the oven or the lamp holder lamp holder.

PLEASE NOTE: The bulb replacement is not covered by your guarantee.

Cleaning the oven door /How to remove the oven doors

For a more thorough clean, you can remove and disassemble the oven door. Proceed as follows:

Oven door structures 1 remove and assemble procedure:

- Open the door to the full extent(fig.1);
- Open the lever A completely on the left and right hinges(fig.2);
- Hold the door as shown in fig.3
- Gently close the door(fig.3)until left and right hinge levers A are hooked to part B of the door(fig.4).
- Withdraw the hinge hooks from their location following arrow C(fig.4);
- Rest the door on a soft surface;
- To replace the door, repeat the above steps in reverse order.

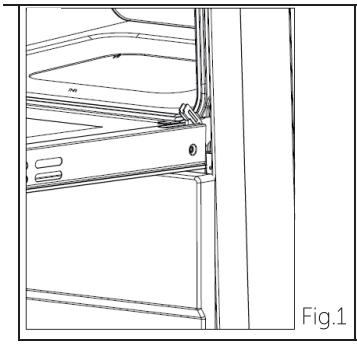

Fig.1

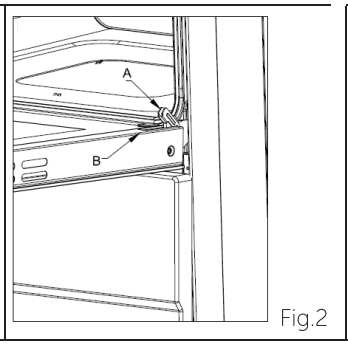

Fig.2

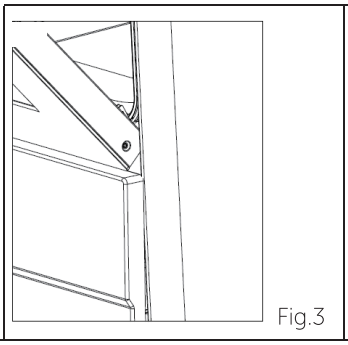

Fig.3

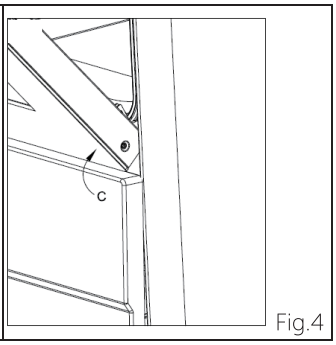

Fig.4

Care and maintenance

Looking after your appliance

Removing the Inner Pane of Glass

- Double oven door: Remove the seal G by unscrew the no.2 bolts (fig.5)
- Gently pull out the inner pane of glass(fig.6)
- Clean the glass with an appropriate cleaner. Dry thoroughly, and place on a soft surface.
- Now you can also clean the inside of the outer glass.

Cleaning the door glass

- Clean the glass door using non-abrasive products or sponges and dry it with a soft cloth.

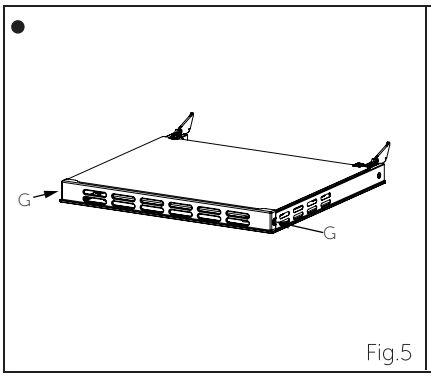

Fig.5

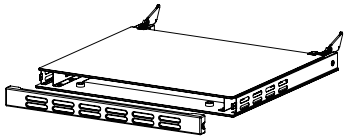

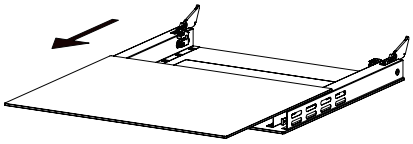
Fig.6

Technical specification

Model	WE50SSW / WE50SSB
Voltage and frequency	220-240V AC/50-60Hz
Oven power	2220-2640W
Oven usable capacity	62L
Power consumption for big hot plate	(1370-1630W)x2
Power consumption for small hot plate	(915-1090W)x2
Total Hot plate power consumption	4570-5440W
Total power	6790-8080W
Energy rating	A

We apologise for any inconvenience caused by minor inconsistencies within these instructions that may occur due to product improvements and development.
All images and drawings are for illustration purposes only.

Energy fiche

Brand		Willow
Model		WE50SSW / WE50SSB
Type of Oven		ELECTRIC
Mass	kg	33.5(+/-2)
Energy Efficiency Index - conventional		93
Energy Efficiency Index - fan forced		/
Energy Class		A
Energy consumption (electricity) - conventional	kWh/cycle	0.75
Energy consumption (electricity) - fan forced	kWh/cycle	/
Number of cavities		1
Heat Source		ELECTRIC
Volume	l	62
This oven complies with EN 60350-1		

Energy Saving Tips Oven - Cook the meals together, if possible. - Keep the pre-heating time short. - Do not elongate cooking time. - Do not forget to turn-off the oven at the end of cooking. - Do not open oven door during cooking period.	Energy Saving Tips Hob - Use cookwares having flat base. - Use cookwares with proper size . - Use cookwares with lid. - Minimize the amount of liquid or fat. - When liquid starts boiling , reduce the setting.

Type of Hob		Electric
Number of Cooking Zones		4
Heating Technology-1		Hotplate
Size-1	cm	Ø15.5
Energy Consumption-1	Wh/kg	203.9
Heating Technology-2		Hotplate
Size-2	cm	Ø15.5
Energy Consumption-2	Wh/kg	203.9
Heating Technology-3		Hotplate
Size-3	cm	Ø18.6
Energy Consumption-3	Wh/kg	178.0
Heating Technology-4		Hotplate
Size-4	cm	Ø18.6
Energy Consumption-4	Wh/kg	180
Energy Consumption of Hob	Wh/kg	191.6
This hob complies with EN 60350-2		

Circuit Diagram

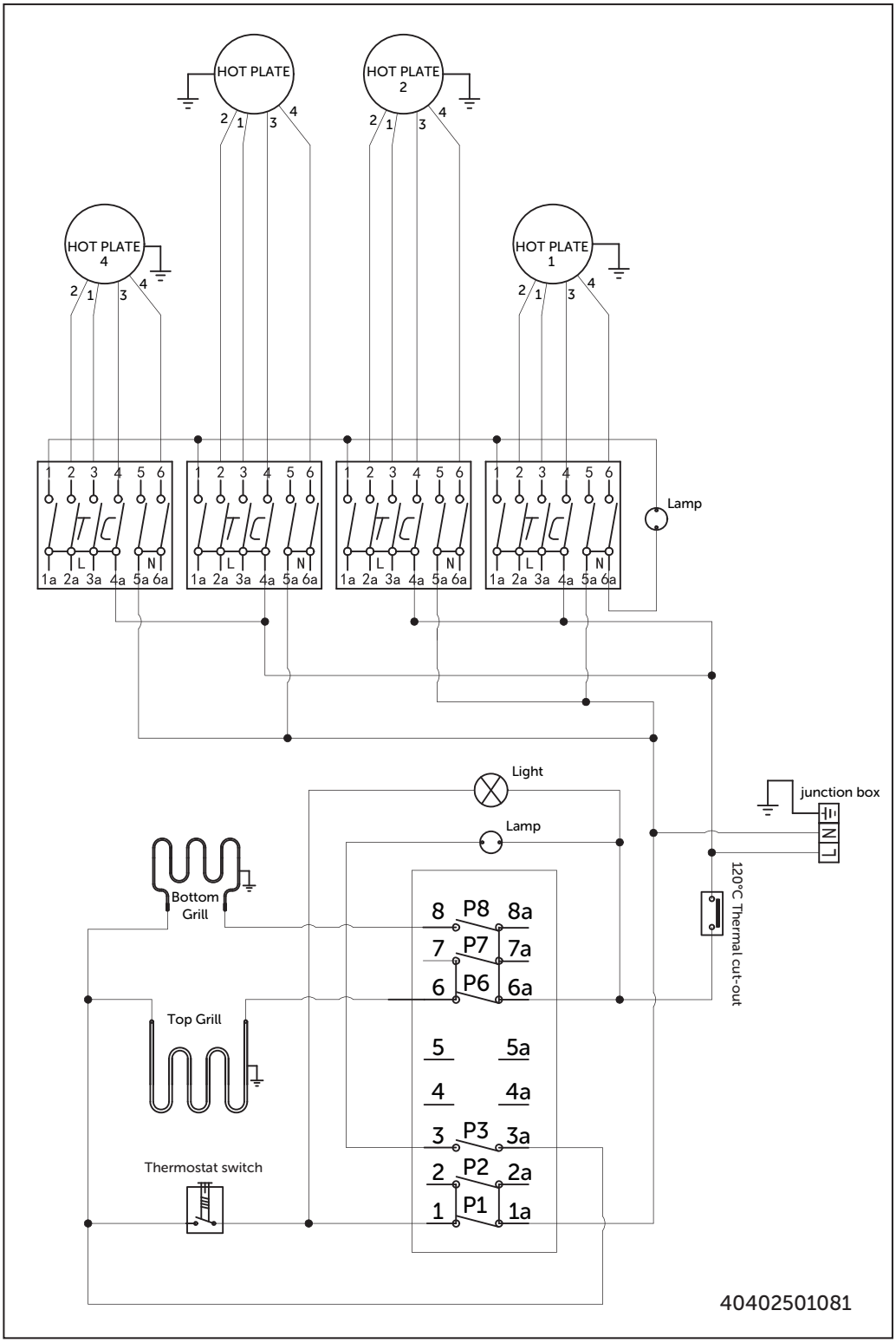

6 Product support

Product support

Help is always at hand

Troubleshooting

If you have a problem with your appliance, check the table below before calling service. You may be able to avoid a service call by and avoid unnecessary inconvenience and expense.
For cooking problems, refer to Handling Baking Problems.

Problem	Causes	What to do
Oven or grill not working	Digital Clock not set properly	Refer to digital timer instructions
	120 min Timer not in "Manual" position	Refer to 120 min timer instructions
	Power not turned on	Switch on electricity
	Household fuse blown	Check fuses
	Controls incorrectly set	Reset controls
	Circuit breaker tripped	Check circuit breaker
Oven light not working	Power not turned on	Switch on electricity
	Household fuse blown	Check fuses
	Circuit breaker tripped	Check circuit breaker
	Lamp blown or loose in socket	Replace or tighten globe
Oven not hot enough	Heat escaping through incorrectly sealed door	Check shelves or dishes are not preventing door closing properly, Check that door is fitted properly after door removal for cleaning
	Door seal is worn or has moved	Replace seal or refit it
Unit smoking when first used	Protective oils being removed	This is normal
Odour on first use of oven		This is normal
		Allow 2–4 hours for odour to dissipate (open all windows)
120 minute timer buzzer not audible	Timer not wound sufficiently	Turn timer knob past 15 minute mark Then turn to the required number of minutes
Oven shelf tight	Oven shelf not inserted correctly, may be upside down or back to front	Remove shelf and insert as per diagram

Note: Only service centers should carry out servicing. Otherwise warranty may be void.

PRODUCT DISPOSAL

Declaration of conformance to product standards

This appliance conforms to all relevant standards applicable to domestic appliances sold in the UK

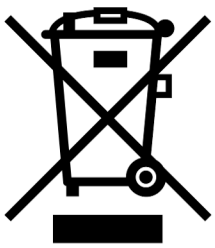

This appliance/fitting is marked according to the European directive 2012/19/EU on Waste Electrical and Electronic Equipment (WEEE). By ensuring this product is disposed of correctly, you will help prevent potential negative consequences for the environment and human health, which could otherwise be caused by inappropriate waste handling of this product.

The symbol on the product, or on the documents accompanying the product, the crossed out wheelie bin symbol, indicates that this appliance/fitting may not be treated as household waste. Instead it shall be handed over to the applicable collection point for the recycling of electrical and electronic equipment.

Disposal must be carried out in accordance with local environmental regulations for waste disposal.

For more detailed information about treatment, recovery and recycling of this product, please contact your local authority, your household waste disposal service or the retailer where you purchased the product.

PRODUCT SUPPORT

If you require any technical guidance or find that your appliance is not operating as intended, a simple solution can often be found in the 'Troubleshooting' section of this user manual.

Your Willow product is guaranteed against faults and breakdowns for 24 months. If you need assistance within the first 28 days of purchase, please contact the retailer supplier. If you still require further assistance after 28 days, call one of our experts on **01759 487837**. In order for us to help you efficiently, please have the following information to hand:

Model Ref: _____

Serial Number: _____

You can find the Model Ref and Serial Number on the rating plate, a small information panel usually on the rear of your appliance.

Date of Purchase: _____

The Date of Purchase can be found on your receipt or confirmation email.

Lines are open 9am – 5:30pm, Monday to Friday. Local call rates apply. Calls to the enquiry line may attract extra charges depending on your call plan/tariff.

For security and training purposes, telephone calls to and from the enquiry line may be recorded and monitored.

2 YEAR WARRANTY

This product is guaranteed for 24 months from the date of original purchase. Any defect that arises due to faulty materials or workmanship will be repaired free of charge (or if applicable the product will be replaced or the purchase price refunded).

The 2 year warranty is subject to the following provisions:

- The product must be correctly installed and operated in accordance with the instructions contained in the manual.
- The warranty does not cover accidental damage, misuse, cabinet parts, knobs or consumable items.
- The appliance must be used solely for domestic purposes.
- The warranty will be rendered invalid if the product is re-sold or has been damaged by inexpert repair.
- Willow disclaim any liability for loss or damage arising from the breakdown of a product.
- Specifications are subject to change without notice.
- This warranty is an addition to and does not diminish your statutory or legal rights.

willow

Contact

After Sales Support: 01759 487837
support@willowappliances.co.uk

www.willowappliances.co.uk


willow