Roller Pillow Block

RST

PERFORMANCE

- High loads
- High speeds
- Superior reliability

VERSATILE

- Designed for shafts from 1/2" to 3"
- Industry standard interchangeable

HEAVY DUTY

Loads up to 12500 pounds

PBC LINEAR®
A PACIFIC BEARING CO.
1-800-962-8979
www.pbclinear.com

Roller Pillow Block

RELIABILITY

- Large cam follower design with side seals delivers superior contaminant resistance
- Excels in long travel joined shafts or rail assembiles
- Accessories such as lubrication ports and scrapers available for ease of maintenance and maximum life

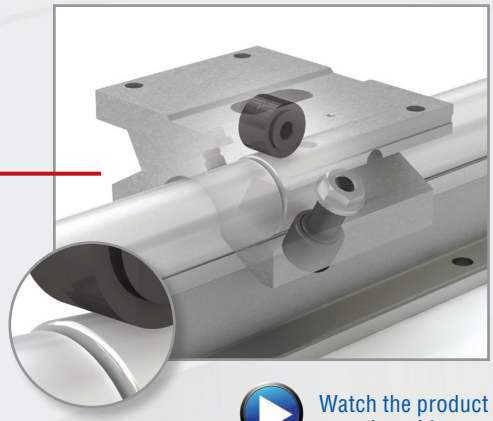

Roller pillow block's large cam follower navigates joined shafts and rail assemblies with ease

Watch the product overview video

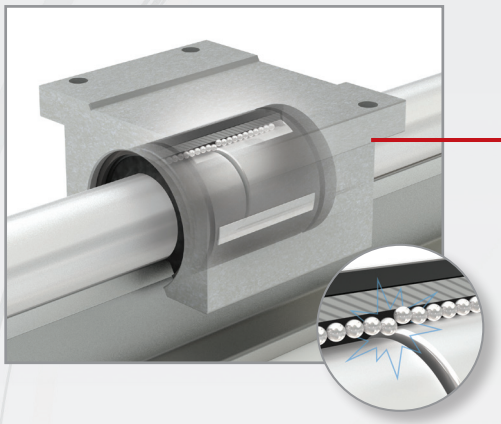

Misalignment of shafts due to installation procedures or non-matched shafts can lead to premature or catastrophic ball bearing failures

DESIGN COMPATIBILITY

- Interchangeability to industry standard mounting holes and centerlines for linear bearing pillow blocks from leading competitors

Note: When a linear ball bearing failure occurs, the shafting is easily damaged and needs to be replaced. When using the roller pillow block, that is not always the case. Consult factory for details.

PBC Linear's Roller Pillow Block is industry standard interchangeable, simplifying replacement and lowering costs

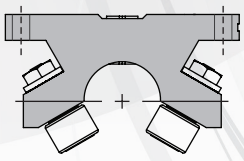

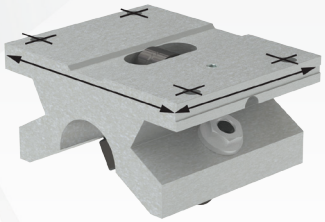

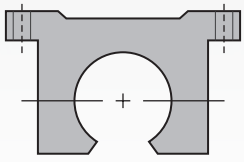

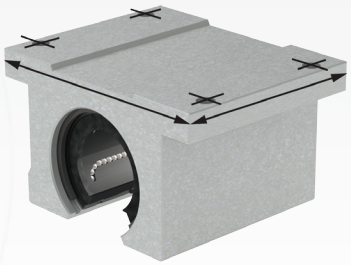

TABLE OF CONTENTS

Applications **3**
Roller Pillow Blocks **6**
Single 6
Double 7
Twin 8
Support Block System 9
Support Rail System 10
Accessories **11**
Technical Information **13**

Roller Pillow Block

RST

HIGH PERFORMANCE

- Speeds up to 2.5 times faster than a linear ball bearing pillow block
- Higher dynamic load capacity compared to industry standard linear ball bearing pillow blocks
- Smoother travel equals lower vibration and noise

DYNAMIC LOAD RATING

	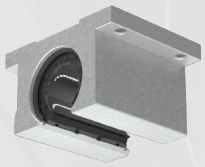 OPEN-STYLE BALL BEARING	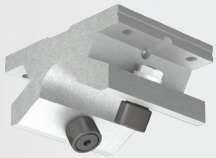 SINGLE ROLLER PILLOW BLOCK	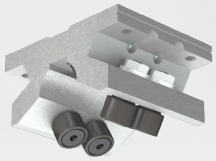 DOUBLE ROLLER PILLOW BLOCK	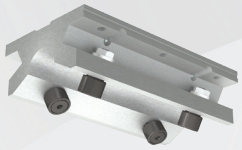 TWIN ROLLER PILLOW BLOCK
SHAFT DIAMETER	LBS	LBS	LBS	LBS
1"	220	955	1910	1910
1.5"	490	1660	3320	3320
2"	858	2400	4800	4800
3"		6260	12520	

LOWER SYSTEM COST

- Simplified installation and alignment
- Floating pillow block option available accommodating up to 0.125" out-of-parallelism, reducing installation time and cost dramatically
- Simple eccentric bearing adjustment allows for tailored bearing fit to application requirements

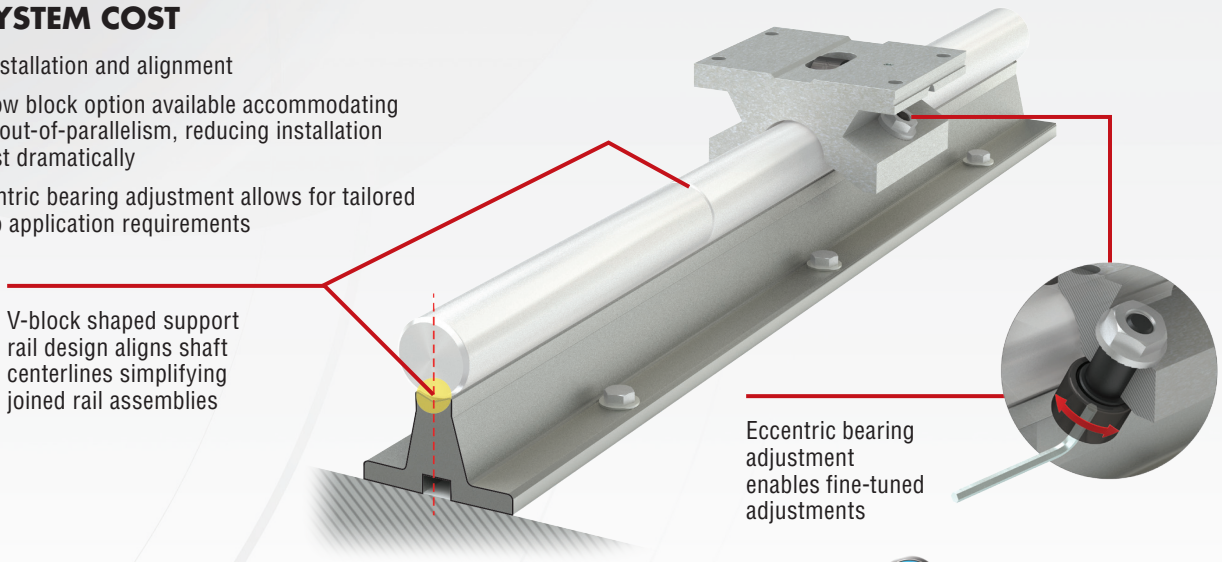

Watch the Roller Pillow Block adjustment video

If you are utilizing our digital catalog, you can click these icons throughout the publication to get more information.

Note: Hyperlinks go to English language website.

COMMON BUTTONS AND LINKS

- Link to product information
- Ordering information
- Download CAD
- Watch product video
- Consult Factory • 800-962-8979
- E-mail an application engineer

Roller Pillow Block

ROLLER PILLOW BLOCK VS. PROFILE RAIL TECHNOLOGY

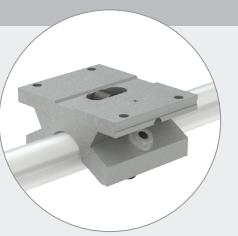

- Superior for joined rail applications
- Low coefficient of friction ideal for heavy load transport applications
- Best suited for horizontal applications with normal downward loading
- Cam followers can be utilized for high speed applications up to 25 feet per second

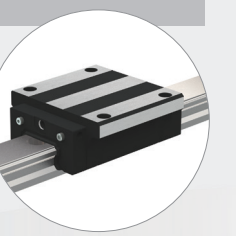

- Superior for high precision applications
- Proper installation requires machining and detailed alignment procedures as highlighted below

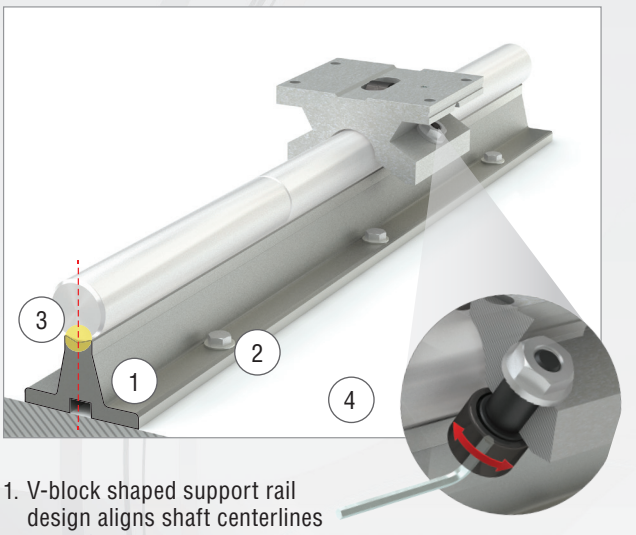

1. V-block shaped support rail design aligns shaft centerlines simplifying joined rail assemblies
2. Support rail mounts using standard fasteners
3. Floating pillow block option available absorbing up to 0.125" out-of-parallelism reducing installation time and cost dramatically
4. Simple eccentric bearing adjustment allows tailored bearing fit to application requirements

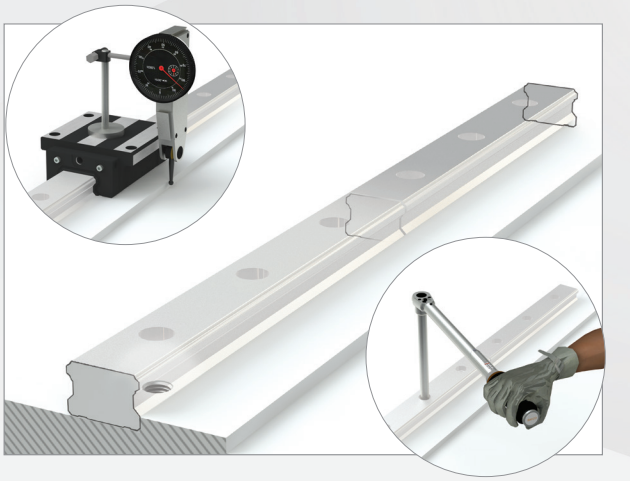

- Manufacturer guidelines require a machined mounting surface and datum plane—this can be extremely expensive or impractical in long rail lengths
- Factory-matched rails must be specified when joining guides to ensure precise alignment of running surfaces, adding expense and time
- Precision tapped mounting holes are required
- Specified torque sequencing is needed to avoid rail distortion

RELIABILITY

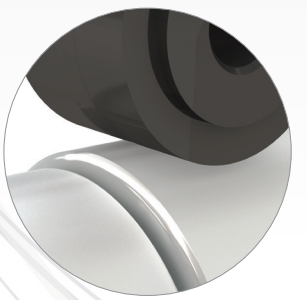

- Large cam follower design delivers superior contaminant resistance
- Excels in long travel applications requiring joined shafts or rail assemblies
- Accessories such as lubrication ports and scrapers available for ease of maintenance and maximum life

RELIABILITY

- Misalignment of rails due to installation procedures or non matched rails can lead to premature or catastrophic ball bearing failure

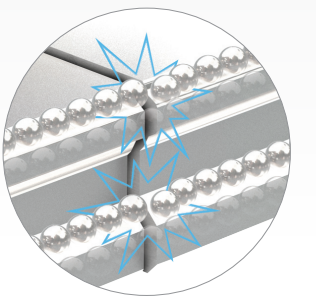

Applications

Industrial Stop Gauge and Push Feed System: The twin Roller Pillow Block provides the rigidity of a heavy duty bearing system for band saws, punches, bending machines, and brakes. Double and twin Roller Pillow Blocks are ideal for applications requiring high load capacities with long life.

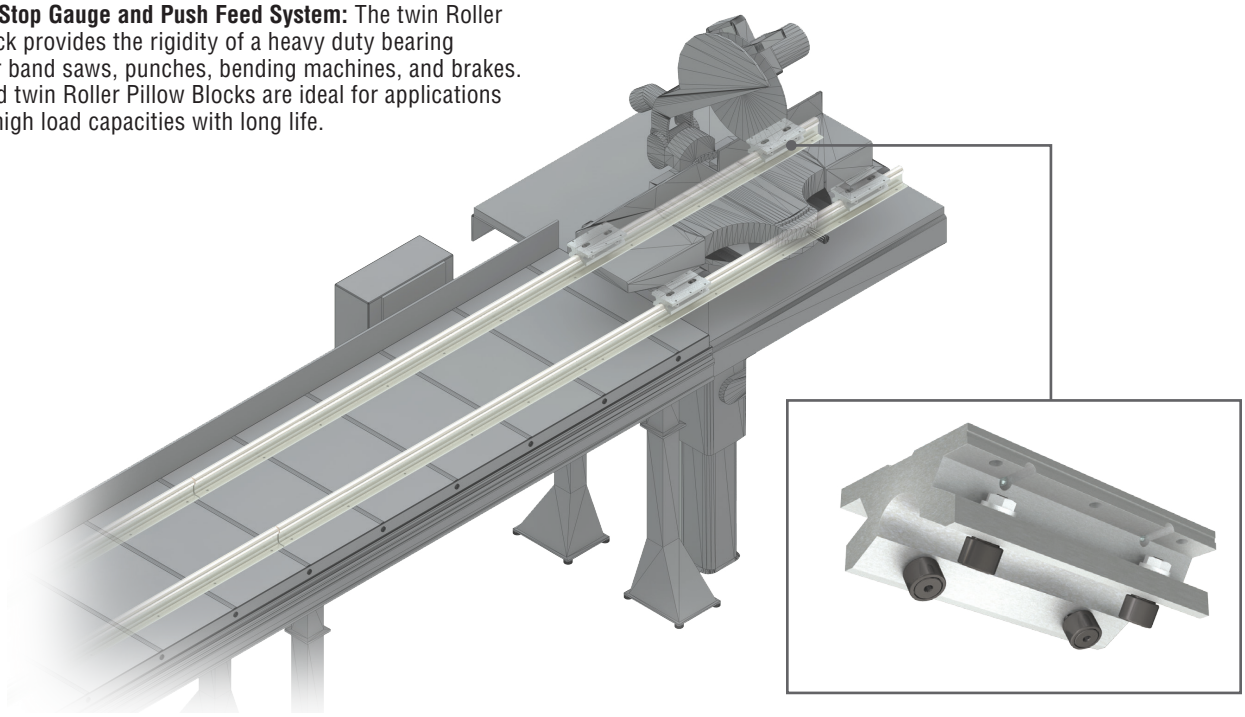

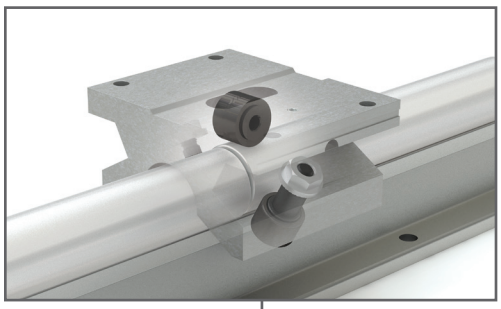

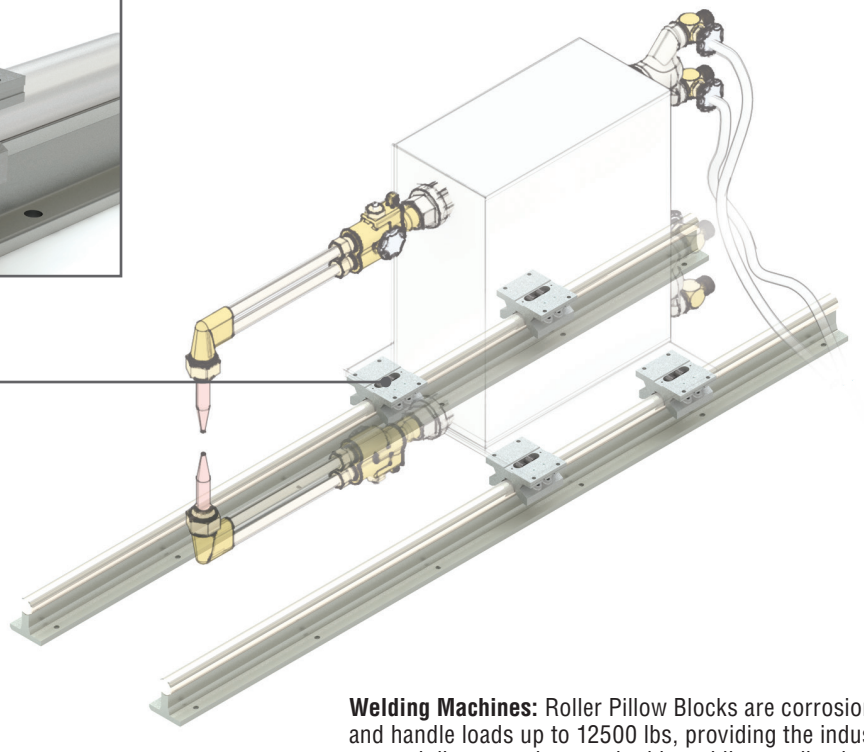

Welding Machines: Roller Pillow Blocks are corrosion resistant and handle loads up to 12500 lbs, providing the industrial strength linear motion required in welding applications. The low-friction rollers easily navigate joined or misaligned shafts and also account for shaft deflection.

Applications

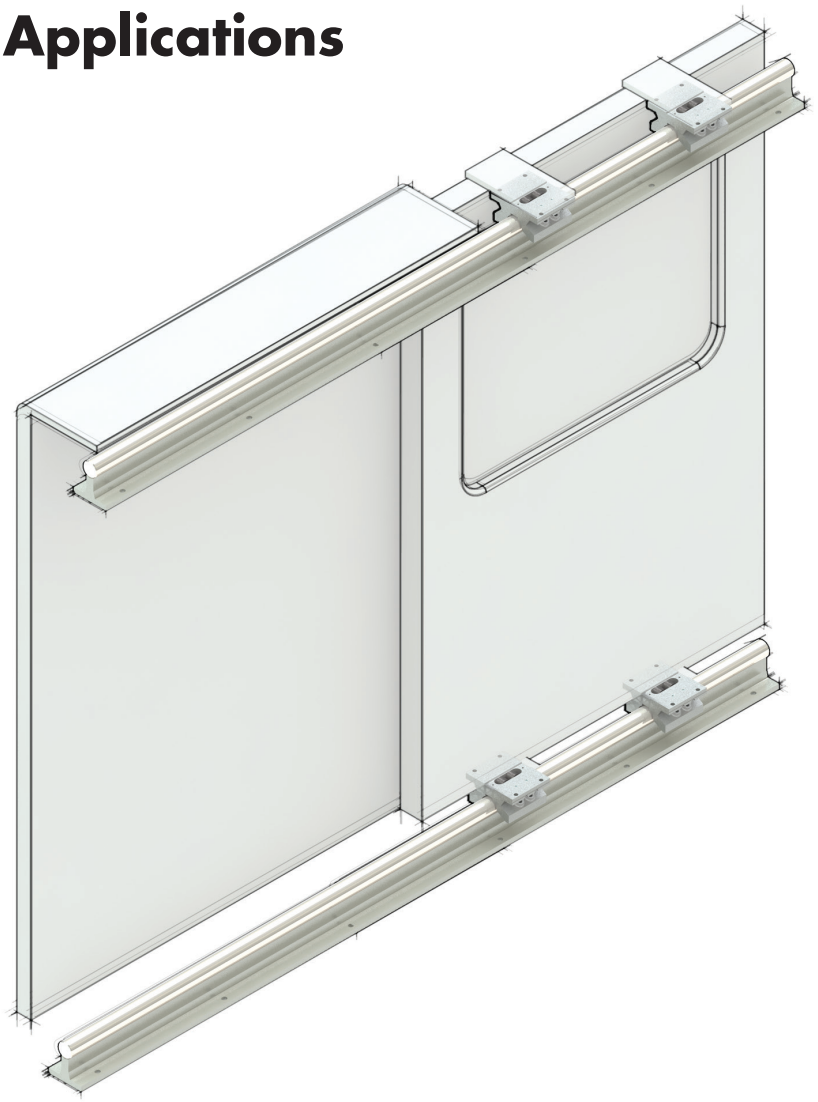

Sliding Doors: Roller Pillow Block systems provide smooth and quiet travel in a wide range of environments.

Pipe Mill: Roller Pillow Blocks provide smooth linear motion in the toughest environments. Large cam followers, equipped with side seals, deliver industrial strength performance over long travel lengths and excel in dirty environments.

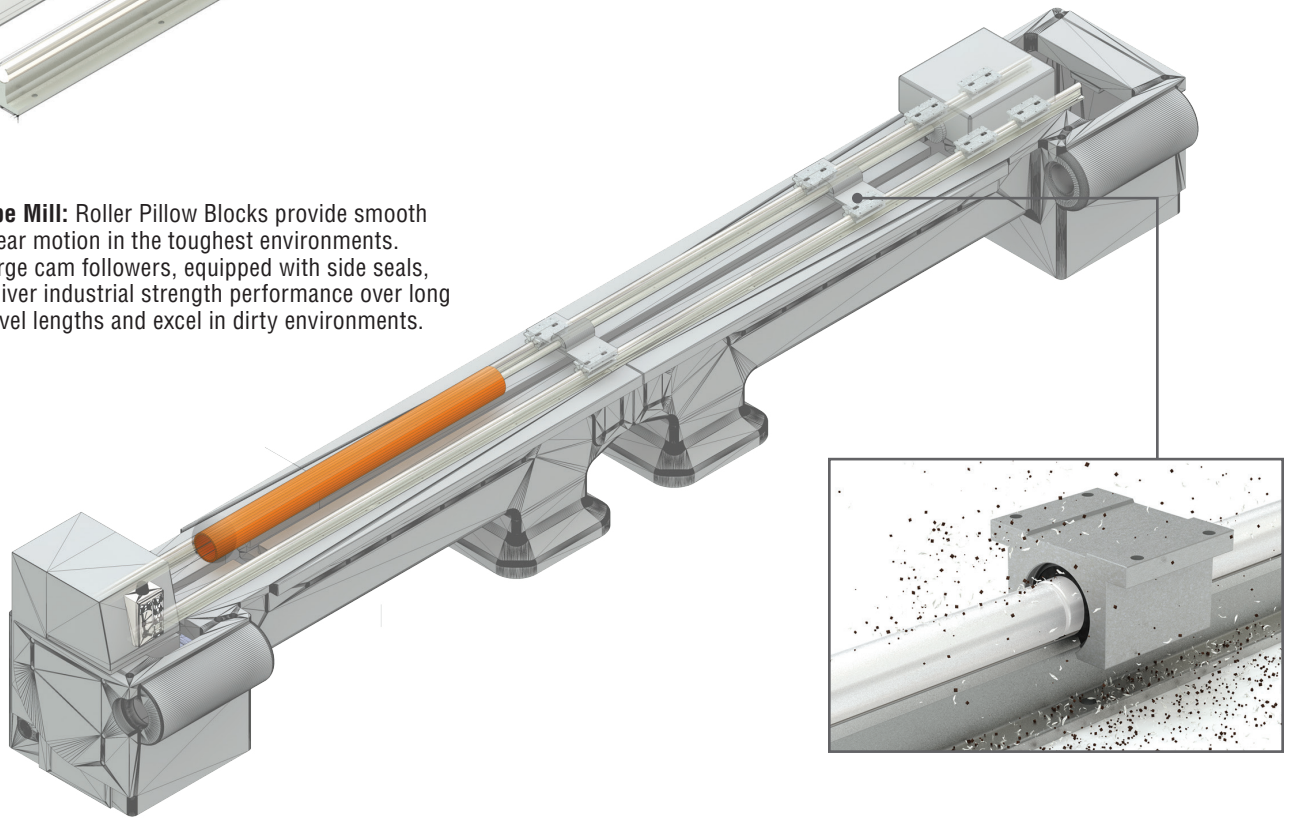

Applications

Rack Systems and Industrial Container Mobility: The Roller Pillow Block system carries heavy loads and easily maneuvers over joined or misaligned shafts over long travels. The system is corrosion resistant and provides high speeds and rigidity in the toughest applications.

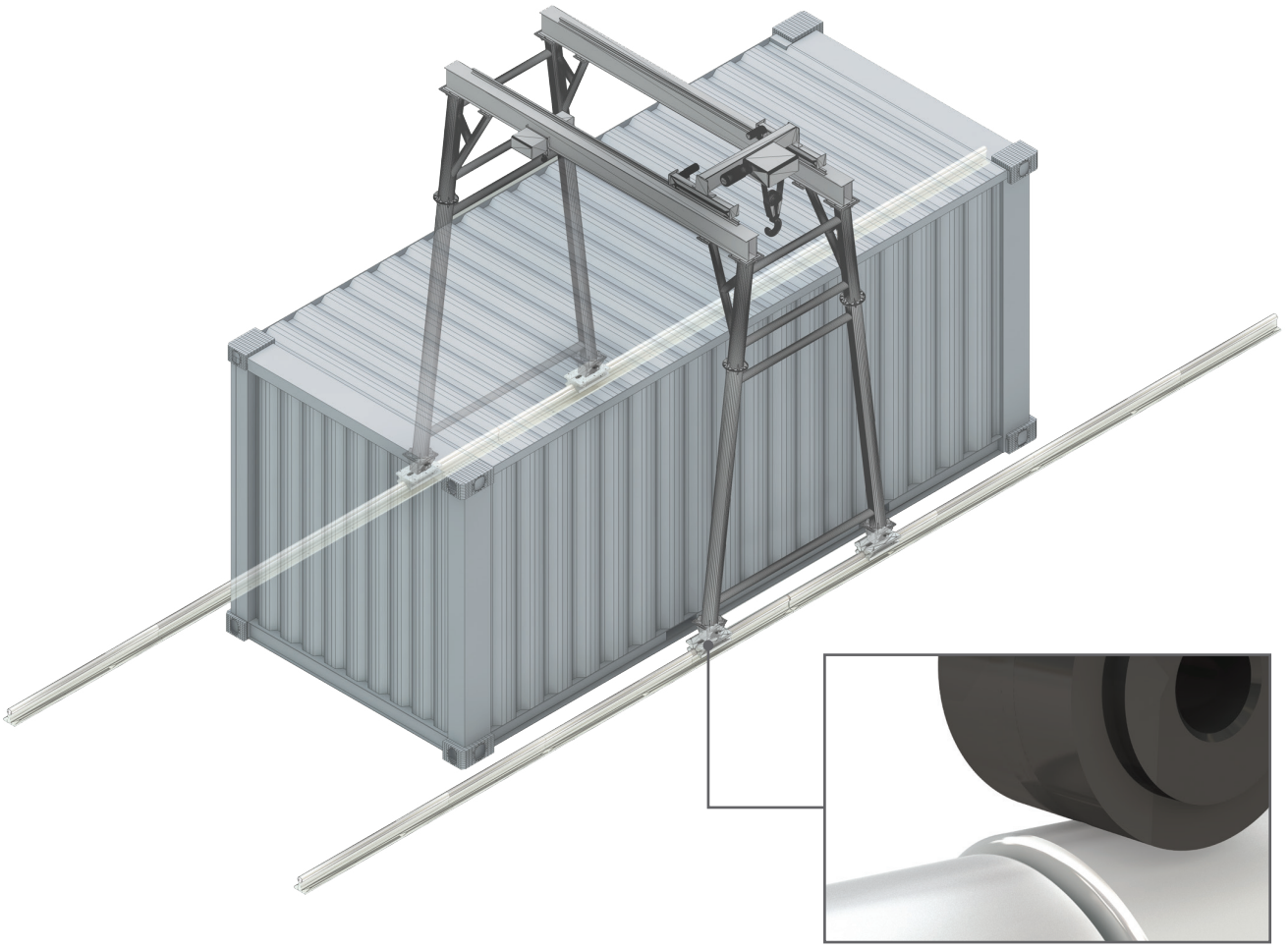

Roller Bearings move smoothly over misaligned and joined shafts over long travels.

Roller Pillow Blocks

Roller Pillow Block is available in single, double, and twin Roller Pillow Block types in various shaft diameters.

- Loads up to 12500 pounds
- Self-aligning
- Adjustable
- Corrosion resistant
- High speeds
- Standard mounting holes
- Re-buildable
- Interchangeability with industry standards

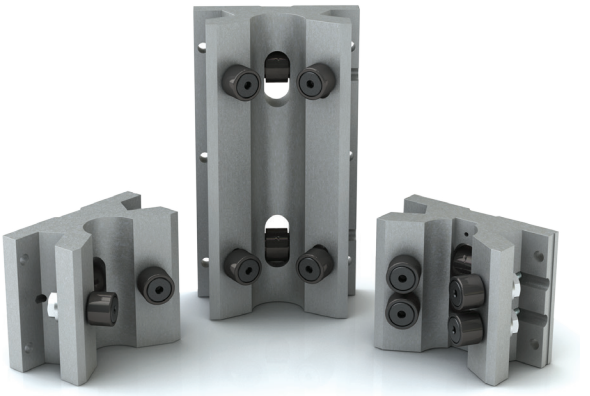

SINGLE ROLLER PILLOW BLOCK

Low friction single Roller Pillow Blocks are selected for standard linear movement or for situations with shaft deflection. Self-aligning Roller Pillow Blocks can handle a half of a degree in misalignment.

Note: To learn more about turning a curve with a single Roller Pillow Block, please reference the technical information on page 14.

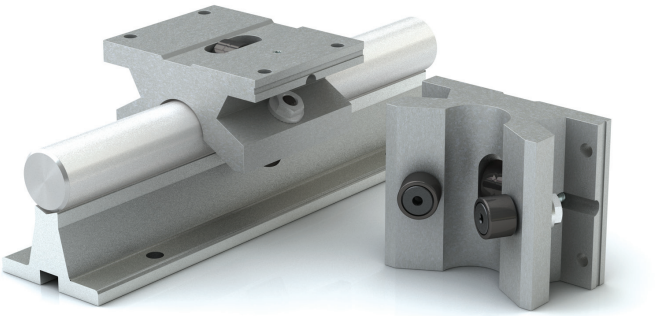

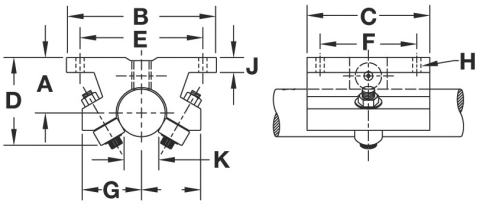

SINGLE ROLLER PILLOW BLOCK—DIMENSIONS AND LOAD RATINGS INCH SHAFTING

PART NUMBER	SHAFT DIAMETER	DYN. LOAD RATING	WEIGHT	A	B	C	D	E	F	G	H		J	K
	IN	LBS	LBS	±0.003	IN	IN	IN	±0.005	±0.005	IN	BOLT	HOLE	IN	IN
SPB-8-OPN	1/2	400	0.400	0.687	2	1-1/2	1-5/32	1.688	1.000	1	#6	5/32	0.240	5/16
SPB-10-OPN	5/8	500	0.500	0.875	2-1/2	1-3/4	1-13/32	2.125	1.125	1-1/16	#8	3/16	0.270	3/8
SPB-12-OPN	3/4	600	0.600	0.937	2-3/4	1-7/8	1-9/16	2.375	1.250	1-1/16	#8	3/16	0.303	7/16
SPB-16-OPN	1	955	1.000	1.187	3-1/4	2-5/8	2	2.875	1.750	1-3/8	#10	7/32	0.360	11/16
SPB-20-OPN	1-1/4	1400	2.000	1.500	4	3-3/8	2-9/16	3.500	2.000	1-3/4	#10	7/32	0.424	13/16
SPB-24-OPN	1-1/2	1660	2.800	1.750	4-3/4	3-3/4	2-7/8	4.125	2.500	1-7/8	1/4	9/32	0.474	1-1/16
SPB-32-OPN	2	2400	5.000	2.125	6	4-3/4	3-1/2	5.250	3.250	2-1/2	3/8	13/32	0.600	1-3/8
SPB-48-OPN	3	6260	14.000	3.500	8-3/8	5-1/2	5-1/2	7.000	4.000	3-5/8	5/8	21/32	1.000	2-1/8

SINGLE ROLLER PILLOW BLOCK—DIMENSIONS AND LOAD RATINGS METRIC SHAFTING

PART NUMBER	SHAFT DIAMETER	DYN. LOAD RATING	WEIGHT	A	B	C	D	E	F	G	H		J	K
	MM	LBS	LBS	±0.003	IN	IN	IN	±0.005	±0.005	IN	BOLT	HOLE	IN	IN
MSPB-16-OPN	16	500	0.500	0.877	2-1/2	1-3/4	1-13/32	2.125	1.125	1-1/16	#8	3/16	0.270	3/8
MSPB-20-OPN	20	600	0.600	0.956	2-3/4	1-7/8	1-9/16	2.375	1.250	1-1/16	#8	3/16	0.300	7/16
MSPB-25-OPN	25	955	1.000	1.179	3-1/4	2-5/8	2	2.875	1.750	1-3/8	#10	7/32	0.360	11/16
MSPB-30-OPN	30	1400	2.000	1.465	4	3-3/8	2-9/16	3.500	2.000	1-3/4	#10	7/32	0.424	13/16

Roller Pillow Blocks

DOUBLE ROLLER PILLOW BLOCK

With double the capacity of the single Roller Pillow Block, the double Roller Pillow Blocks offer twice the dynamic load rating in a similar mounting footprint. The double Roller Pillow Blocks are used when longer travel life or an increase in load capacity is required.

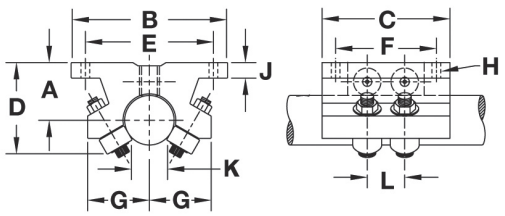

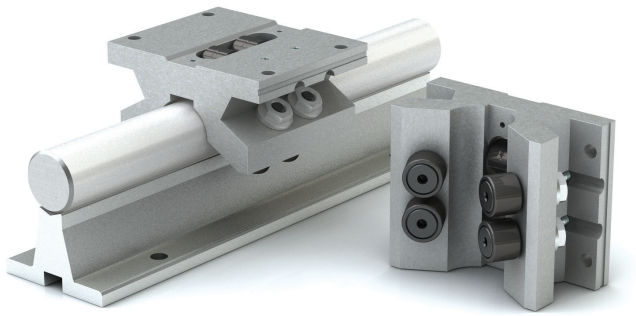

DOUBLE ROLLER PILLOW BLOCK—DIMENSIONS AND LOAD RATINGS INCH SHAFTING

PART NUMBER	SHAFT DIAMETER	DYN. LOAD RATING	WEIGHT	A	B	C	D	E	F	G	H		J	K	L
	IN	LBS	LBS	±0.003	IN	IN	IN	±0.005	±0.005	IN	BOLT	HOLE	IN	IN	IN
DPB-8-OPN	1/2	800	0.500	0.687	2	2	1-5/32	1.688	1.625	1	#6	5/32	0.240	5/16	0.562
DPB-10-OPN	5/8	1000	0.700	0.875	2-1/2	2-1/2	1-13/32	2.125	2.000	1-1/16	#8	3/16	0.270	3/8	0.526
DPB-12-OPN	3/4	1200	0.800	0.937	2-3/4	2-5/8	1-9/16	2.375	1.250	1-1/16	#8	3/16	0.300	7/16	0.562
DPB-16-OPN	1	1910	1.200	1.187	3-1/4	2-5/8	2	2.875	1.750	1-3/8	#10	7/32	0.360	11/16	0.720
DPB-20-OPN	1-1/4	2800	2.300	1.500	4	3-3/8	2-9/16	3.500	2.000	1-3/4	#10	7/32	0.424	13/16	0.937
DPB-24-OPN	1-1/2	3320	3.000	1.750	4-3/4	3-3/4	2-7/8	4.125	2.500	1-7/8	1/4	9/32	0.474	1-1/16	0.937
DPB-32-OPN	2	4800	5.500	2.125	6	4-3/4	3-1/2	5.250	3.250	2-1/2	3/8	13/32	0.603	1-3/8	1.187
DPB-48-OPN	3	12520	20.000	3.500	8-3/8	7-1/4	5-1/2	7.000	5.875	3-5/8	5/8	21/32	1.000	2-1/8	2.080

DOUBLE ROLLER PILLOW BLOCK—DIMENSIONS AND LOAD RATINGS METRIC SHAFTING

PART NUMBER	SHAFT DIAMETER	DYN. LOAD RATING	WEIGHT	A	B	C	D	E	F	G	H		J	K	L
	MM	LBS	LBS	±0.003	IN	IN	IN	±0.005	±0.005	IN	BOLT	HOLE	IN	IN	IN
MDPB-16-OPN	16	1000	0.700	0.877	2-1/2	2-1/2	1-13/32	2.125	2.000	1-1/16	#8	3/16	0.270	3/8	0.562
MDPB-20-OPN	20	1200	0.800	0.956	2-3/4	2-5/8	1-9/16	2.375	1.250	1-1/16	#8	3/16	0.300	7/16	0.562
MDPB-25-OPN	25	1910	1.200	1.179	3-1/4	2-5/8	2	2.875	1.750	1-3/8	#10	7/32	0.360	11/16	0.720
MDPB-30-OPN	30	2800	3.000	1.465	4	3-3/8	2-9/16	3.500	2.000	1-3/4	#10	7/32	0.424	13/16	0.937

Roller Pillow Blocks

TWIN ROLLER PILLOW BLOCK

The twin Roller Pillow Block load rating is the same as the double and is a good choice when using only one Roller Pillow Block per shaft. The twin model also offers an additional pair of mounting holes.

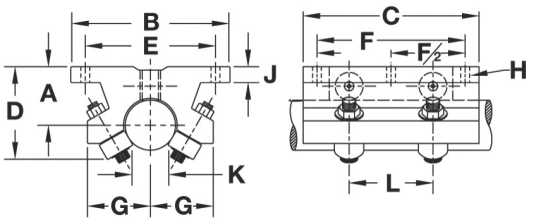

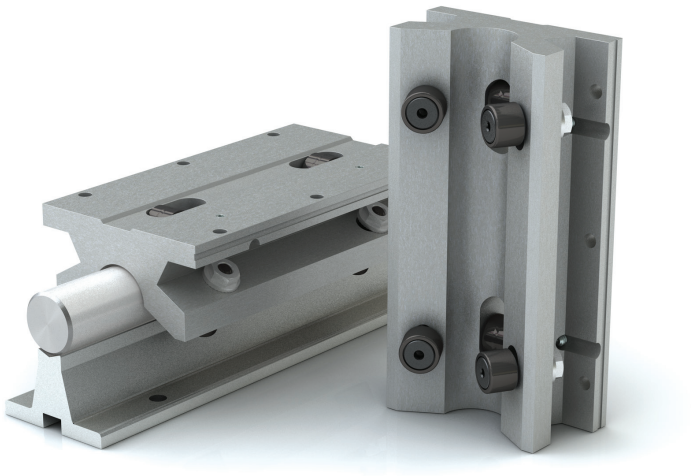

TWIN ROLLER PILLOW BLOCK—DIMENSIONS AND LOAD RATINGS INCH SHAFTING

PART NUMBER	SHAFT DIAMETER	DYN. LOAD RATING	WEIGHT	A	B	C	D	E	F	G	H		J	K	L
	IN	LBS	LBS	±0.003	IN	IN	IN	±0.005	±0.005	IN	BOLT	HOLE	IN	IN	IN
TWN-8-OPN	1/2	800	0.800	0.687	2	3-1/2	1-5/32	1.688	2.500	1	#6	5/32	0.240	5/16	1.500
TWN-10-OPN	5/8	1000	1.000	0.875	2-1/2	4	1-13/32	2.125	3.000	1-1/16	#8	3/16	0.270	3/8	2.125
TWN-12-OPN	3/4	1200	1.200	0.937	2-3/4	4-1/2	1-9/16	2.375	3.500	1-1/16	#8	3/16	0.300	7/16	2.500
TWN-16-OPN	1	1910	2.300	1.187	3-1/4	6	2	2.875	4.500	1-3/8	#10	7/32	0.360	11/16	3.750
TWN-20-OPN	1-1/4	2800	4.400	1.500	4	7-1/2	2-9/16	3.500	5.500	1-3/4	#10	7/32	0.424	13/16	4.625
TWN-24-OPN	1-1/2	3320	6.500	1.750	4-3/4	9	2-7/8	4.125	6.500	1-7/8	1/4	9/32	0.474	1-1/16	5.500
TWN-32-OPN	2	4800	12.400	2.125	6	12	3-1/2	5.250	10.500	2-1/2	3/8	13/32	0.600	1-3/8	8.250

TWIN ROLLER PILLOW BLOCK—DIMENSIONS AND LOAD RATINGS METRIC SHAFTING

PART NUMBER	SHAFT DIAMETER	DYN. LOAD RATING	WT.	A	B	C	D	E	F	G	H		J	K	L
	MM	LBS	LBS	±0.003	IN	IN	IN	±0.005	±0.005	IN	BOLT	HOLE	IN	IN	IN
MTWN-16-OPN	16	1000	1.000	0.877	2-1/2	4	1-13/32	2.125	3.000	1-1/16	#8	3/16	0.270	3/8	2.125
MTWN-20-OPN	20	1200	1.200	0.956	2-3/4	4-1/2	1-9/16	2.375	3.500	1-1/16	#8	3/16	0.300	7/16	2.500
MTWN-25-OPN	25	1910	2.300	1.179	3-1/4	6	2	2.875	4.500	1-3/8	#10	7/32	0.360	11/16	3.750
MTWN-30-OPN	30	2800	4.400	1.465	4	7-1/2	2-9/16	3.500	5.500	1-3/4	#10	7/32	0.424	13/16	4.625

Shaft and Rail Systems

SHAFT AND RAIL SYSTEMS

PBC Linear® offers shaft and rail systems composed of world-class linear motion components in six standard configurations in four different sizes. These systems also come with the option of carriage plates—with or without mounted pillow blocks.

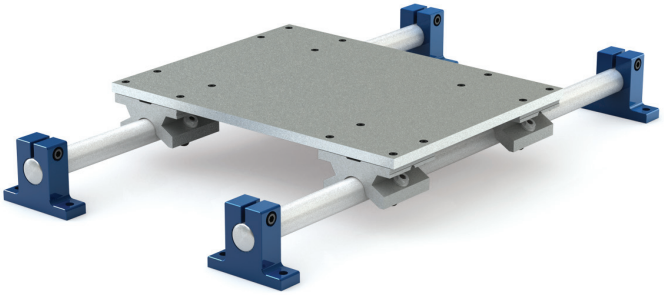

SUPPORT BLOCK SYSTEM

PBC Linear support block systems are manufactured with Roller Pillow Block(s), 60 Plus® precision case hardened and ground shaft, and two steel support blocks.

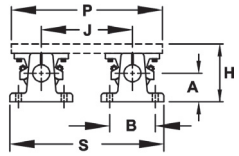	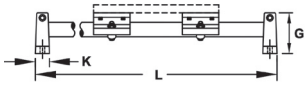	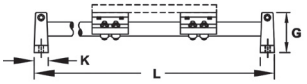	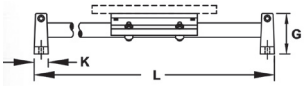
Support Block System End View	Single Pillow Block System Part Number Prefix: **S1S**	Double Pillow Block System Part Number Prefix: **S1D**	Twin Pillow Block System Part Number Prefix: **S1T**

TECHNICAL INFORMATION

TYPE ROLLER PILLOW BLOCK	PART NUMBER	SHAFT DIAMETER	TOTAL BASIC DYNAMIC RATING	NUMBER ROLLER PILLOW BLOCKS	NUMBER SUPPORT BLOCKS	NUMBER HARDENED SHAFTS	A	B	G	H*	J*	K*	P*	S*
		IN	LBS				IN	IN	IN	IN	IN	IN	IN	IN
Single	**S1S08**	0.500	800	2	2	1	1.000	2.000	1.630	2.187	3.250	0.630	5.500	5.250
Double	**S1D08**	0.500	1600	2	2	1	1.000	2.000	1.630	2.187	3.250	0.630	5.500	5.250
Twin	**S1T08**	0.500	800	1	2	1	1.000	2.000	1.630	2.187	3.250	0.630	5.500	5.250
Single	**S1S12**	0.750	1200	2	2	1	1.250	2.750	2.130	2.937	4.500	0.750	7.500	7.250
Double	**S1D12**	0.750	2400	2	2	1	1.250	2.750	2.130	2.937	4.500	0.750	7.500	7.250
Twin	**S1T12**	0.750	1200	1	2	1	1.250	2.750	2.130	2.937	4.500	0.750	7.500	7.250
Single	**S1S16**	1.000	1910	2	2	1	1.500	3.250	2.630	3.437	5.500	1.000	9.000	8.750
Double	**S1D16**	1.000	3820	2	2	1	1.500	3.250	2.630	3.437	5.500	1.000	9.000	8.750
Twin	**S1T16**	1.000	1910	1	2	1	1.500	3.250	2.630	3.437	5.500	1.000	9.000	8.750
Single	**S1S24**	1.500	3320	2	2	1	2.000	4.750	3.500	5.000	8.000	1.250	13.000	12.750
Double	**S1D24**	1.500	6640	2	2	1	2.000	4.750	3.500	5.000	8.000	1.250	13.000	12.750
Twin	**S1T24**	1.500	3320	1	2	1	2.000	4.750	3.500	5.000	8.000	1.250	13.000	12.750

*When used with standard carriage plates

Shaft and Rail Systems

SUPPORT RAIL SYSTEMS

Support rail systems are manufactured with Roller Pillow Blocks and 60 Plus® precision case hardened and ground shaft that is mounted on a continuous aluminum support rail. To prevent the carriage from sliding off the shaft, end stops can be purchased.

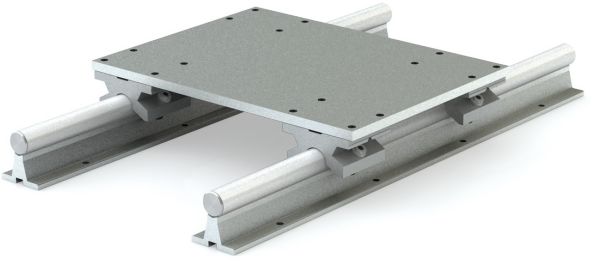

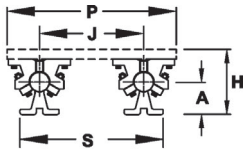	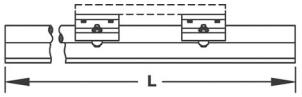	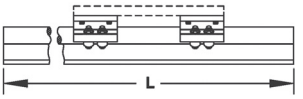	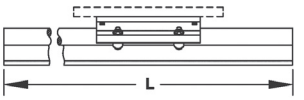
End View	Single Pillow Block System Part Number Prefix: **S2S**	Double Pillow Block Part Number Prefix: **S2D**	Twin Pillow Block Part Number Prefix: **S2T**

TECHNICAL INFORMATION

TYPE ROLLER PILLOW BLOCK	PART NUMBER	SHAFT DIAMETER	TOTAL BASIC DYNAMIC RATING	NUMBER ROLLER PILLOW BLOCKS	NUMBER CONTINUOUS SUPPORT RAIL	NUMBER HARDENED SHAFTS	A	H*	J*	P*	S*
		IN	LBS				IN	IN	IN	IN	IN
Single	S2S08	1/2	800	2	1	1	1.125	2.187	3.250	5.500	4.750
Double	S2D08	1/2	1600	2	1	1	1.125	2.187	3.250	5.500	4.750
Twin	S2T08	1/2	800	1	1	1	1.125	2.187	3.250	5.500	4.750
Single	S2S12	3/4	1200	2	1	1	1.500	2.937	4.500	7.500	6.250
Double	S2D12	3/4	2400	2	1	1	1.500	2.937	4.500	7.500	6.250
Twin	S2T12	3/4	1200	1	1	1	1.500	2.937	4.500	7.500	6.250
Single	S2S16	1	1910	2	1	1	1.750	3.437	5.500	9.000	7.630
Double	S2D16	1	3820	2	1	1	1.750	3.437	5.500	9.000	7.630
Twin	S2T16	1	1910	1	1	1	1.750	3.437	5.500	9.000	7.630
Single	S2S24	1-1/2	3320	2	1	1	2.500	5.000	8.000	13.000	11.000
Double	S2D24	1-1/2	6640	2	1	1	2.500	5.000	8.000	13.000	11.000
Twin	S2T24	1-1/2	3320	1	1	1	2.500	5.000	8.000	13.000	11.000

*When used with standard carriage plates

Accessories

ACCESSORIES AND OPTIONS

To increase the performance of PBC Linear® Roller Pillow Blocks the following options are offered.

TOP GREASE OPTION

Roller Pillow Block rollers are lubricated and sealed. In some applications it is desired to re-grease the main support roller. The top grease option can help achieve full bearing life in applications that reduce or contaminate the grease of the roller. Such conditions may exist in applications where solvents or contaminants leach out the grease through the vents in the seals, or where contaminants are so fine or extreme they must be purged out of the roller with fresh grease. The top grease option is also recommended when high speeds or high temperatures are present. The top grease option is available on pillow blocks that are 1-1/4" or larger. To order, add the suffix, "TG" after the pillow block model number.

Note: Shock, vibration, and moments may affect the life of the pillow block.

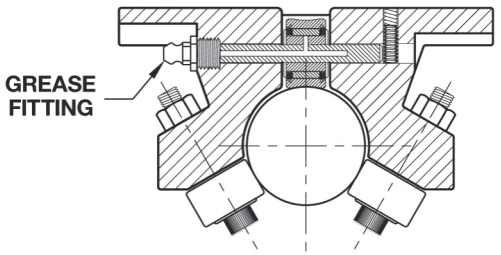

SCRAPER OPTION

Reduce the amount of dirt accumulation that lands on the top of the Roller Pillow Block shaft with the scraper option. Available only on specially machined pillow blocks, the scraper is mounted to each end of the bearing assembly to clean the shaft in either direction. Made from spring-tempered beryllium copper that conforms to the shaft diameter, the scraper will perform successfully after a short break in period. Scraper model is not available as a retrofit. To order this option, add the suffix "-S" after the pillow block model number.

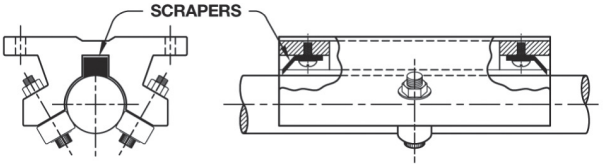

FLOATING OPTION

The only product on the market that addresses the non-parallel shafting problem is a Roller Pillow Block with the floating option. Also useful when trying to align long shafts, floating Roller Pillow Blocks should be used on one shaft with the standard pillow block on the other. Special grease is included for the grooves on top of each floating pillow block. During installation do not over-tighten the mounting bushings as this will cause them to bind. To order, add the prefix, "F-" to the single, double, or twin Roller Pillow Block number.

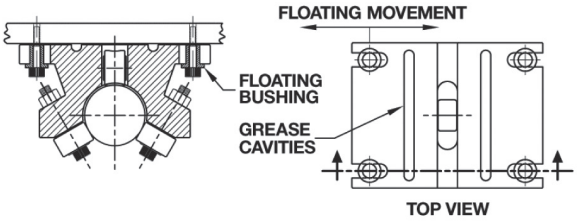

PILLOW BLOCK SIZE		8	10	12	16	20	24	32	48	64
FLOATING MOVEMENT	IN	1/16	1/16	1/16	3/32	1/8	1/8	5/32	3/16	3/16

Accessories

LINEAR CARRIAGE LOCK

The linear carriage lock is a positive locking device for linear slides, carriages, and bearings. The locks are:

- Self-centering
- Corrosion resistant
- Strong holding
- Contaminant resistant
- Easily mounted
- Maintenance-free

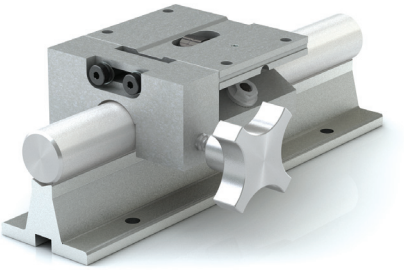

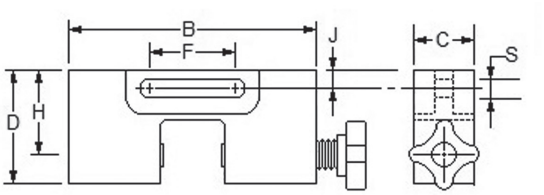

PART NUMBER	SHAFT DIAMETER	D	B	C	J	F	H	S
	IN	IN	IN	IN	IN	IN	IN	IN
LCL-08	1/2	0.920	2.00	1	0.220	0.810	0.690	0.260
LCL-12	3/4	1.250	2.75	1	0.220	0.810	0.940	0.260
LCL-16	1	1.600	3.25	1	0.270	0.810	1.180	0.260
LCL-24	1-1/2	2.290	4.75	1	0.400	0.810	1.750	0.260
LCL-32	2	2.850	6.00	1	0.500	1.250	2.130	0.500

PILLOW BLOCK REBUILD KITS

The Roller Pillow Block rebuild kit contains all the parts required for a complete unit rebuild:

- One fixed side roller
- One eccentric side roller
- One top support roller
- One top roller axle
- One set screw

To rebuild a double or twin Roller Pillow Block, please order two kits.

To ensure the receipt of the correct kit, please provide the four digit run number stamped onto the end face of the pillow block. For example, for one kit for a 1" pillow block with the run number 1047, the order number would be: BK 16-1047.

Although individual parts are available, all parts of a Roller Pillow Block should be replaced before re-installation.

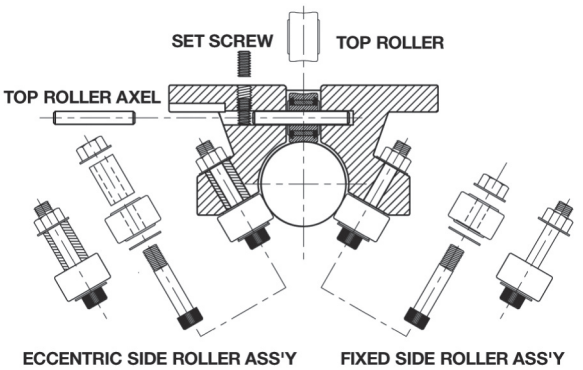

PART NUMBER	SHAFT DIAMETER	PART NUMBER	SHAFT DIAMETER
	IN		IN
BK08	1/2	BK20	1-1/4
BK10	5/8	BK24	1-1/2
BK12	3/4	BK32	2
BK16	1	BK48	3

Technical Information

ORIENTATION AND CANTILEVER LOADS

When a linear motion system is subjected to a cantilever load or moment, the system designer must take into consideration these type of loads will greatly affect the performance of the system. Roller Pillow Blocks are not suitable for these types of applications because the moments will load the side rollers and cause premature failure. If the moments or cantilever loads are minor, loads may be acceptable. For this reason we ask that you consult the factory.

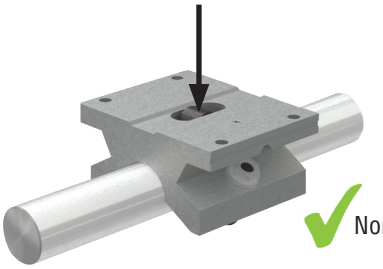

Normal Loading

Inverted Load

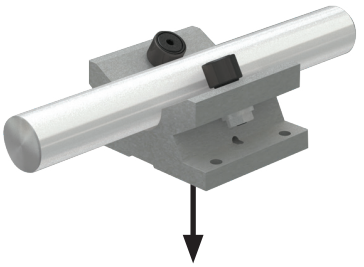

Moment Load
Consult Factory

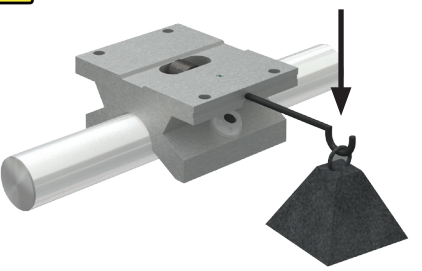

Vertical Load
Consult Factory

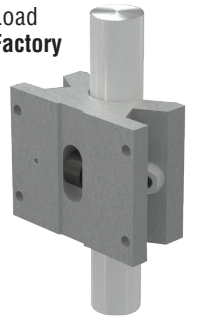

Consult Factory • 800-962-8979

DETERMINING PILLOW BLOCK SIZE AND MODEL

To determine the proper size Roller Pillow Block for an application, refer to the chart using the worst-case load and the required travel life. Select the Roller Pillow Block above where the lines intersect. This should be suitable for anticipated travel life and loading.

Note: Shock, vibration, and moments may affect the life of the pillow block.

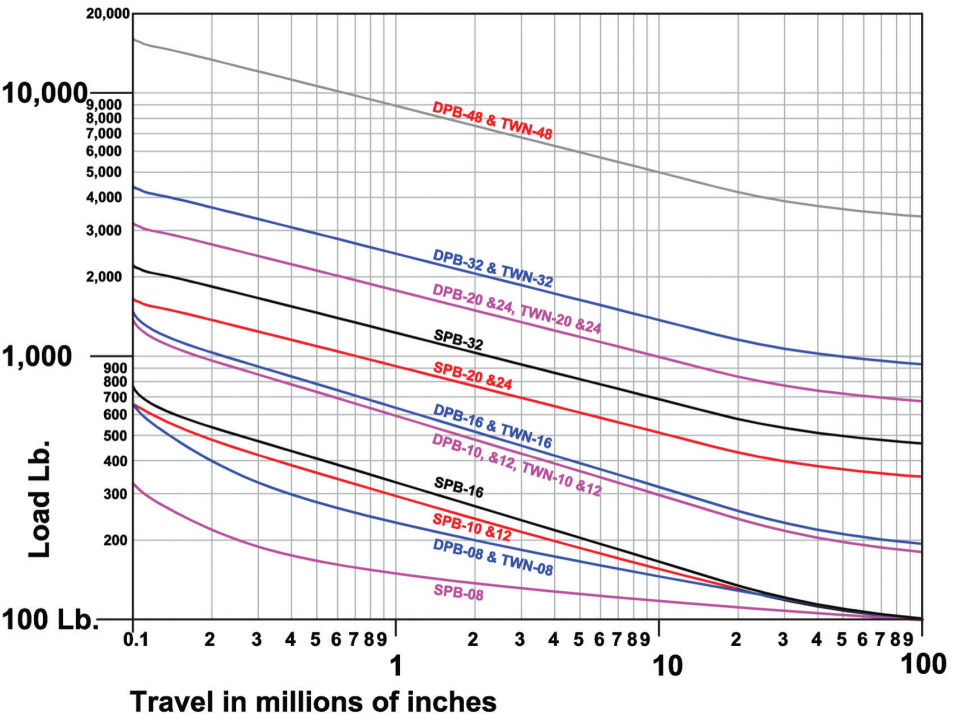

Note: Chart is rated at 10% accuracy. Figures are based on a safety factor of one.

Technical Information

ADJUSTMENTS

Roller Pillow Blocks are factory set for PBC Linear® Simplicity® 60 Plus® shafting. Adjustments can be made to the eccentric cam follower to either increase or decrease the shaft clearance.

Located on the same side of the Roller Pillow Block as the set screw, the eccentric cam follower is adjusted by using a stubby allen wrench while allowing a 0.001" feeler gauge to freely move between the shaft and the eccentric roller. The fixed side must remain in contact with the shaft. If care is taken not to overload the roller, then a slight pre-load is possible. Rollers should never be tightened to the point where they cannot move freely.

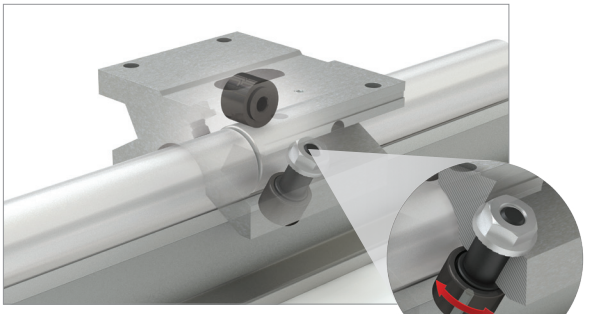

Watch the Roller Pillow Block adjustment video

TURNING A CURVE

A single Roller Pillow Block has the ability to turn a curve or run on a non-linear system. The following table lists the minimum track radius that the single Roller Pillow Block can tolerate without additional alteration.

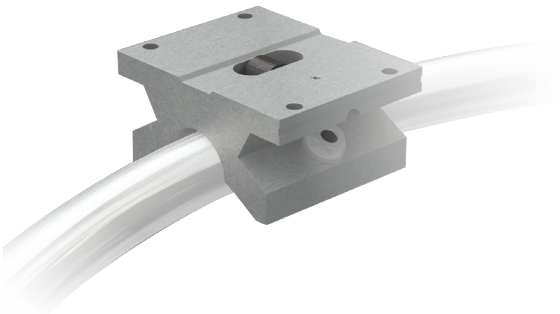

PILLOW BLOCK SIZE		8	10	12	16	20	24	32	48	64
Minimum Shaft Radius	IN	6	12	14	18	36	40	44	52	60

Technical Information

CROSS REFERENCE GUIDE

Below is a chart that cross-references our product with competitors. For more assistance, please consult the factory.

STANDARD LINEAR BALL BEARINGS

PBC LINEAR	PBC LINEAR SEALED	THOMSON	THOMSON SEALED	INA	INA SEALED	NB STEEL RETAINER	NB STEEL RETAINER SEALED	NB PLAST'C RETAINER	NB PLAST'C RETAINER SEALED
IP4G-0S	IP4G	A4812		KBZ04	KBZ04PP	SW4	SW4UU	SW4G	SW4GUU
IP6G-0S	IP6G	A61014		KBZ06	KBZ06PP	SW6	SW6UU	SW6G	SW6GUU
IP8G-0S	IP8G	A81420	A81420DD	KBZ08	KBZ08PP	SW8	SW8UU	SW8G	SW8GUU
IP10G-0S	IP10G	A101824		KBZ10	KBZ10PP	SW10	SW10UU	SW10G	SW10GUU
IP12G-0S	IP12G	A122026	A122026DD	KBZ12	KBZ12PP	SW12	SW12UU	SW12G	SW12GUU
IP16G-0S	IP16G	A162536	A162536DD	KBZ16	KBZ16PP	SW16	SW16UU	SW16G	SW16GUU
IP20G-0S	IP20G	A203242		KBZ20	KBZ20PP	SW20	SW20UU	SW20G	SW20GUU
IP24G-0S	IP24G	A243848		KBZ24	KBZ24PP	SW24	SW24UU	SW24G	SW24GUU
IP32G-0S	IP32G	A324864		KBZ32	KBZ32PP	SW32	SW32UU	SW32G	SW32GUU

OPEN TYPE LINEAR BALL BEARINGS

PBC LINEAR	PBC LINEAR SEALED	THOMSON	THOMSON SEALED	INA	INA SEALED	NB STEEL RETAINER	NB STEEL RETAINER SEALED	NB PLAST'C RETAINER	NB PLAST'C RETAINER SEALED
IP8G-OP-0S	IP8G-OP	OPN81420	OPN81420DD	KBZ08OP	KBZ08OPPP	SW8OP	SW8OPUU	SW8GOP	SW8GOPUU
IP10G-OP-0S	IP10G-OP	OPN101824		KBZ10OP	KBZ10OPPP	SW10OP	SW10OPUU	SW10GOP	SW10GOPUU
IP12G-OP-0S	IP12G-OP	OPN122026	OPN122026DD	KBZ12OP	KBZ12OPPP	SW12OP	SW12OPUU	SW12GOP	SW12GOPUU
IP16G-OP-0S	IP16G-OP	OPN162536	OPN162536DD	KBZ16OP	KBZ16OPPP	SW16OP	SW16OPUU	SW16GOP	SW16GOPUU
IP20G-OP-0S	IP20G-OP	OPN203242		KBZ20OP	KBZ20OPPP	SW20OP	SW20OPUU	SW20GOP	SW20GOPUU
IP24G-OP-0S	IP24G-OP	OPN243848		KBZ24OP	KBZ24OPPP	SW24OP	SW24OPUU	SW24GOP	SW24GOPUU
IP32G-OP-0S	IP32G-OP	OPN324864		KBZ32OP	KBZ32OPPP	SW32OP	SW32OPUU	SW32GOP	SW32GOPUU

HI LOAD—SELF ALIGNING LINEAR BALL BEARINGS

PBC LINEAR	THOMSON	INA	NB
IPS6	SUPER6	KX6PP	TW6UU
IPS8	SUPER8	KX8PP	TW8UU
IPS10	SUPER10	KX10PP	TW10UU
IPS12	SUPER12	KX12PP	TW12UU
IPS16	SUPER16	KX16PP	TW16UU
IPS20	SUPER20	KX20PP	TW20UU
IPS24	SUPER24	KX24PP	TW24UU
IP8-OP	SUPER8OPN	KX08PP	TW8OPUU
IP10-OP	SUPER10OPN	KX010PP	TW10OPUU
IP12-OP	SUPER12OPN	KX012PP	TW12OPUU
IP16-OP	SUPER16OPN	KX016PP	TW16OPUU
IP20-OP	SUPER20OPN	KX020PP	TW20OPUU
IP24-OP	SUPER24OPN	KX024PP	TW24OPUU

PBC LINEAR	THOMSON	INA	NB
IPPS08-GL	SPB8UU	KGX8PP	TWA8UU
IPPS10-GL	SPB10UU	KGX10PP	TWA10UU
IPPS12-GL	SPB12UU	KGX12PP	TWA12UU
IPPS16-GL	SPB16UU	KGX16PP	TWA16UU
IPPS20-GL	SPB20UU	KGX20PP	TWA20UU
IPPS24-GL	SPB24UU	KGX24PP	TWA24UU
IPPNS08-GLP	SPB8OPN	KGXO8PP	TWD8UU
IPPNS10-GLP	SPB10OPN	KGXO10PP	TWD10UU
IPPNS12-GLP	SPB12OPN	KGXO12PP	TWD12UU
IPPNS16-GLP	SPB16OPN	KGXO16PP	TWD16UU
IPPNS20-GLP	SPB20OPN	KGXO20PP	TWD20UU
IPPNS24-GLP	SPB24OPN	KGXO24PP	TWD24UU

Consult Factory • 800-962-8979

Precision-Matched Bearings & Shafting

YOU WOULDN'T BUY A MISMATCHED PAIR OF SHOES, WOULD YOU?
JUST LIKE SHOES, BEARINGS EXCEL WHEN MATCHED WITH THE RIGHT SHAFT.

Precision-matched bearings and shafting provide:

- Lower costs
- Maximize life
- Improve overall performance
- Minimize downtime and replacement cost

Bearing and shafting combinations:

- Roller Pillow Block with shaft
- Plain Bearing with shaft
- Ball Bearing with shaft
- Bearing and shaft assemblies

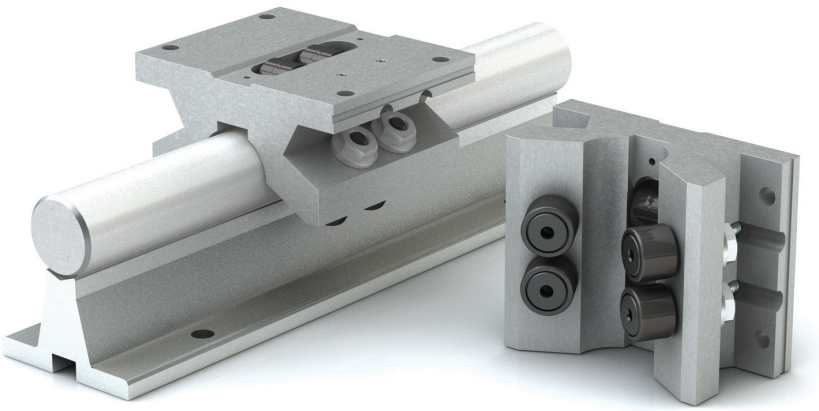

COMPONENTS, ASSEMBLIES, AND SYSTEMS AVAILABLE NOW!

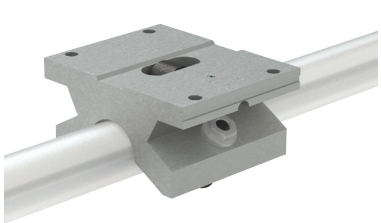

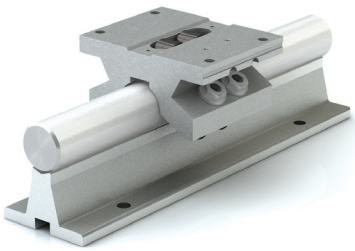

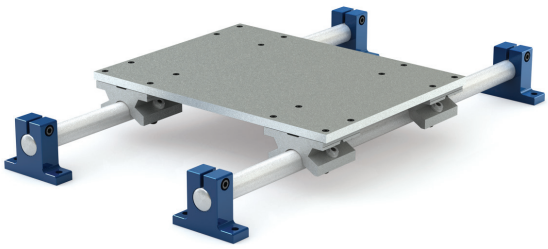

For more information on linear motion components and full mechatronics solutions, please vist www.pbclinear.com or consult the factory at 800-962-8979.

Shafting Configuration Tool

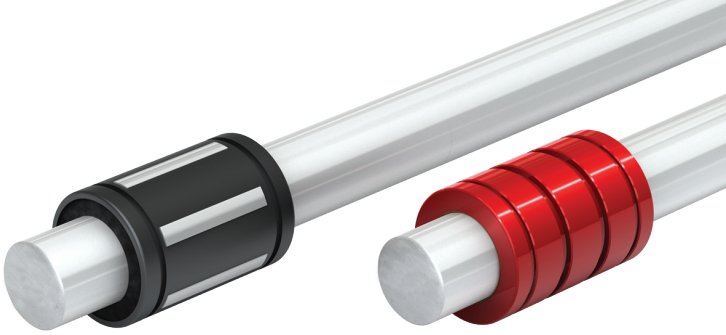

Step 1

Step 1: Define basic shaft characteristics

- ○ Diameter
- ○ Overall Length
- ○ Material

Step 2

Step 2: Define radial machined features from a menu of options

Step 3

Step 3: Define left and right journals from a menu of typical configurations

Step 4

Step 4: Define special requirements, such as:

- ○ Plating
- ○ Packaging
- ○ Certifications

Finish

Finish: How would you like to receive the information?

- ○ Quick: Send me a 3D model of my configured shaft
- ○ Quote: Send me a formal proposal

COMING SOON TO WWW.PBCLINEAR.COM

Worldwide Headquarters
PBC Linear
A Pacific Bearing Co.

6402 E. Rockton Road
Roscoe, IL 61073 USA

Toll-Free: 1.800.962.8979
Fax: 1.815.389.5790

sales@pbclinear.com
www.pbclinear.com

PBC LINEAR
A PACIFIC BEARING CO.

www.pbclinear.com

European Branch
PBC Lineartechnik GmbH
A Pacific Bearing Co.

Röntgenstr. 8
40699 Erkrath, Germany

Telefon: 0049 2104 957440 0
Fax: 0049 2104 957440 9

info@pbclinear.eu
www.pbclinear.eu

PBC Linear has a global network of distributors with thousands of locations worldwide.
Visit www.pbclinear.com to find a distributor near you.

DISTRIBUTED BY

© 2016 PBC Linear®, A Pacific Bearing Company • "PBC Linear" and "PBC Lineartechnik GmbH" are subsidiaries of Pacific Bearing Company ("PBC"). The data and specifications in this publication have been carefully compiled and are believed to be accurate and correct. Specifications are subject to change without notice. It is the responsibility of the user to determine and ensure the suitability of PBC's products for a specific application. PBC's only obligation will be to repair or replace, without charge, any defective components if returned promptly. No liability is assumed beyond such replacement. Other corporate and product names, images, text and logos may be trademarks or copyrights of other companies and are used only for explanation and to the owners benefit; without intent to infringe. This document may not be reproduced, in part or whole, without the prior written authorization of PBC. Consult www.pbclinear.com for the latest technical updates.

LITRST-008 [3-16]