TRACTION MINDER™ ELEVATOR SYSTEM

PACKAGED SOLUTION TO ADDRESS ASME 17.1 REQUIREMENTS FOR TRACTION (ELECTRIC) ELEVATORS

Traction Minder creates newfound ease when ensuring the right components are specified to meet application and code requirements for traction elevators. A robust portfolio of packaged solutions also accounts for the growing demand to implement BACnet into BAS/BMS systems—conveniently offered with other system components in a single part number. Selections can now be completed with an increased level of confidence that field-proven components, from a single, trusted source, will create the right balance between functionality and cost in a life/safety application.

A list of Traction Minder part numbers, included on the back page, provide the pump, control panel and floats to meet 50, 100 and 150 GPM (as specified by ASME 17.1) at the specified distance (feet). This package approach—which was inspired by the industry's acceptance of Oil Minder® in hydraulic elevators—maximizes operational efficiencies from specification to installation. Designing a plug-and-play, application-specific answer to pumps and associated equipment in traction elevators has led to the following features:

- SE/SV series pumps, featuring a vortex impeller design, have become the standard for elevators
- NEMA 4X control panel with HOA switch, pump run light and a dry contact (high water) for connectivity
- Three floats (on, off and high water) are pre-assembled at the factory to minimize labor
- Ability to further customize with control panel features, main disconnect and/or junction box with 8-pin connector

STANCOR
Pump & Control Solutions

BUILDING TRADES I CONSTRUCTION I MINING I UTILITIES I WASTEWATER

TECHNICAL DATA

TRACTION MINDER™ SYSTEM COMPONENTS				TECHNICAL DATA											
Traction Minder PN	Pump	Control	Floats (3)	HP	Voltage	Phase	Rated Full-load Amps	RPM	Discharge (inches)	Head (ft.) @ 50 GPM	Head (ft.) @100 GPM	Head (ft.) @ 150 GPM	Weight (lbs.)	Height (inches)	Width (inches)
WSE40/115/1	SE-40/115/1	CB-1000/120/1/15/2	741-009-1-XXX	0.4	115	1	5.2	3,450	2”	11”			24	15.59”	9.09”
WSE50/115/1	SE-50/115/1	CB-1000/120/1/15/2	741-009-1-XXX	0.5	115	1	8.0	3,450	2”	22’			29	16.57”	9.09”
WSE50/208/3	SE-50/208/3	CB-2000/208/3/2.5-4/5	741-009-1-XXX	0.5	208	3	3.1	3,450	2”	22’			29	16.57”	9.09”
WSE50/230/3	SE-50/230/3	CB-2000/230/3/2.5-4/7.5	741-009-1-XXX	0.5	230	3	2.8	3,450	2”	22’			29	16.57”	9.09”
WSE50/460/3	SE-50/460/3	CB-2000/480/3/1.6-2.5/15	741-009-1-XXX	0.5	460	3	1.4	3,450	2”	22’			29	16.57”	9.09”
WSE100/115/1	SE-100/115/1	CB-1000/120/1/15/2	741-009-1-XXX	1.0	115	1	12.0	3,450	2”	35’	9’		40	19.53”	9.09”
WSE100/208/3	SE-100/208/3	CB-2000/208/3/4-6.3/5	741-009-1-XXX	1.0	208	3	4.4	3,450	2”	36’	14’		40	19.53”	9.09”
WSE100/230/3	SE-100/230/3	CB-2000/230/3/4-6.3/7.5	741-009-1-XXX	1.0	230	3	4.0	3,450	2”	36’	14’		40	19.53”	9.09”
WSE100/460/3	SE-100/460/3	CB-2000/480/3/1.6-2.5/15	741-009-1-XXX	1.0	460	3	2.0	3,450	2”	36’	14’		40	19.53”	9.09”
WSV200/208/1	SV-200/208/1	CB-1000/208/1/15/2	741-009-1-XXX	2.0	208	1	12.2	3,450	2”/3”	52’	35’	14’	77	20.94”	15.35”
WSV200/230/1	SV-200/230/1	CB-1000/230/1/15/3	741-009-1-XXX	2.0	230	1	11.0	3,450	2”/3”	52’	35’	14’	77	20.94”	15.35”
WSV200/208/3	SV-200/208/3	CB-2000/208/3/6.3-10/5	741-009-1-XXX	2.0	208	3	6.9	3,450	2”/3”	52’	35’	14’	77	20.94”	15.35”
WSV200/230/3	SV-200/230/3	CB-2000/230/3/4-6.3/7.5	741-009-1-XXX	2.0	230	3	6.2	3,450	2”/3”	52’	35’	14’	77	20.94”	15.35”
WSV200/460/3	SV-200/460/3	CB-2000/480/3/2.5-4/15	741-009-1-XXX	2.0	460	3	3.1	3,450	2”/3”	52’	35’	14’	77	20.94”	15.35”
WSV300/208/3	SV-300/208/3	CB-2000/208/3/6.3-10/5	741-009-1-XXX	3.0	208	3	8.8	3,450	2”/3”	64’	47’	26’	79	21.73”	15.35”
WSV300/230/3	SV-300/230/3	CB-2000/230/3/6.3-10/7.5	741-009-1-XXX	3.0	230	3	8.0	3,450	2”/3”	64’	47’	26’	79	21.73”	15.35”
WSV300/460/3	SV-300/460/3	CB-2000/480/3/4-6.3/15	741-009-1-XXX	3.0	460	3	4.0	3,450	2”/3”	64’	47’	26’	79	21.73”	15.35”
WSV500/208/3	SV-500/208/3	CB-2000/480/3/14-20/15	741-009-1-XXX	5.0	208	3	16.6	3,450	3”/4”	74’	61’	48’	123	24.92”	18.50”
WSV500/230/3	SV-500/230/3	CB-2000/230/3/11-16/7.5	741-009-1-XXX	5.0	230	3	15.0	3,450	3”/4”	74’	61’	48’	123	24.92”	18.50”
WSV500/460/3	SV-500/460/3	CB-2000/480/3/9-13/15	741-009-1-XXX	5.0	460	3	7.5	3,450	3”/4”	74’	61’	48’	123	24.92”	18.50”

A “BAC” suffix is added to the end of the PN to indicate BACnet capability.

BACnet INTEGRATION

BACnet functionality is available on all Traction Minder models to combine plumbing and HVAC equipment into the same channel for alarms, fault codes and operating schedules. The integrated hardware/software implementation allows the control panel to communicate with any protocol, with IP and MS/TP being the most popular. The following messaging is offered with the standard BACnet package:

- Oil fault
- High water alarm
- Pump run status

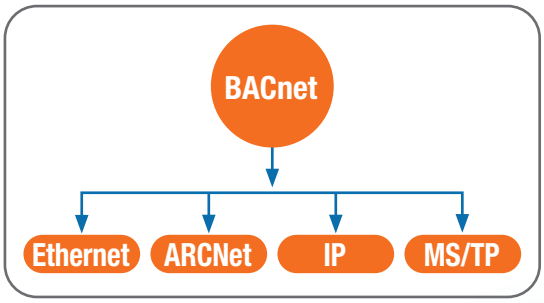

STANCOR
Pump & Control Solutions

WASTEWATER SOLUTIONS LLC

Arturo Garcia
102 NE 2nd Street, Suite 510
Boca Raton FL 33432
(954) 483 9269
arturo@wws-llc.com

STANCOR®
Pump & Control Solutions

Typical Traction Minder™ System

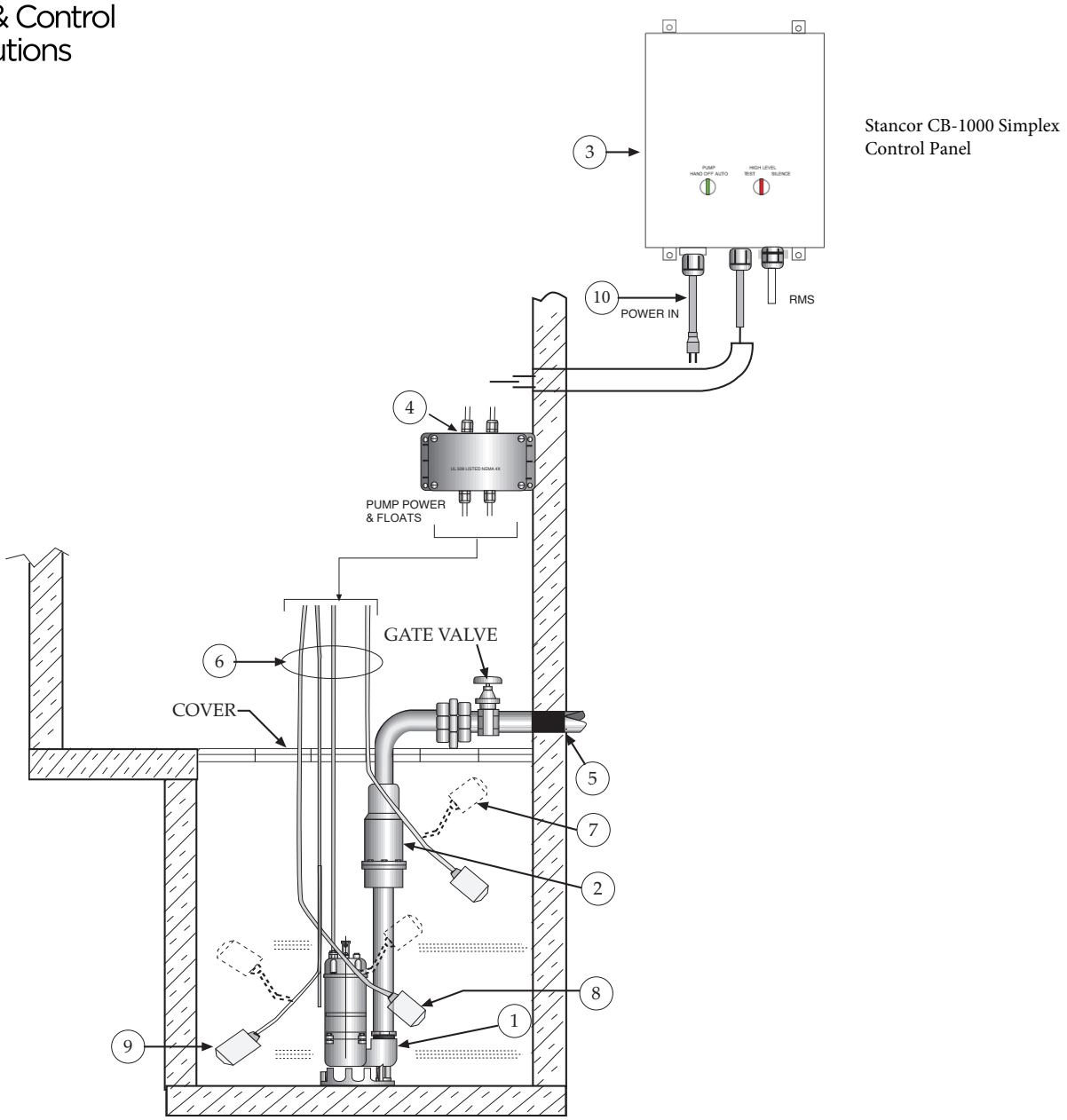

1. Stancor® Model SE-50 submersible effluent pump .5 HP, 115 volt, 3600 RPM, 2” discharge connection
2. Check valve (2”) By others.
3. Stancor® Traction Minder™ system, 115V, 1Ø control system with built-in audible and visual alarm when pump does not run due to high liquid or high amperage condition. Provide silencing button for audible alarm built into panel. Panel shall have one contact for a remote alarm location (high water or amperage alert).
4. Junction box (Optional)
5. All buried pump pressure discharge piping shall be protected with tapecoat CT corrosion protection tape
6. Pump cable and pump “on / off and high liquid alarm” float cables (16 ft. lengths)
7. 'High liquid alarm' float with clamp device to mount to pump discharge piping
8. Pump 'ON' float
9. Pump 'OFF' Float
10. Power cord and molded ground plug (6 ft. length)

ITEMS 1, 2, 3, 4, 6, 7, 8, 9, and 10 PROVIDED BY STANCOR® AS A STANDARD PACKAGE

STANCOR	TECHNICAL DATA	AVENGER SERIES	SE-100
	Dwg: DS-A09-009	Rev: 2	Date: 01/16

MOTOR SPECIFICATIONS

Motor Design	Induction
Motor Type	Enclosed submersible
Insulation Class	Class E
Motor Protection	Bi-metallic Thermal Switch
Bi-Metallic Temp Trip	120° C ± 5° C
Service Factor	1.3
Voltage Tolerance	± 10% from nominal

MOTOR DATA, 60Hz

Model	Phase	Output Power BHP	Volts	Full Load Amps	Locked Rotor Amps	NEMA Code Letter	Power Factor 100% Load	Motor Efficiency 100% Load	Pole/ Speed (rpm)
SE-100	1	1.0	115	12.0	60.00	H	0.99	0.71	2/3450
	1	1.0	230	6.0	30.00	H	0.99	0.60	2/3450
	3	1.0	230	4.0	15.00	G	0.87	0.74	2/3450
	3	1.0	460	2.0	9.00	J	0.83	0.75	2/3450
	3	1.0	575	1.2	6.00	G	0.80	0.76	2/3450

MATERIALS OF CONSTRUCTION

Upper Motor Lid	Nylon 66
Motor Housing	AISI 304 Stainless Steel
Oil Chamber	FC-20 Cast Iron
Volute	FC-20 Cast Iron
External Hardware	AISI 304 Stainless Steel
O-Rings	Nitrile (Buna N)
Motor Shaft	Stainless Steel (410)
Upper Bearing	Single row Sealed
Lower Bearing(s)	Single row Sealed
Upper Shaft Seal	CA/CE (carbon/ceramic)
Lower Shaft Seal	SIC/SIC (silicon carbide/silicon carbide)
Impeller	FC-20 Cast Iron

DIMENSIONS, WEIGHT, AND MISC.

Pump weight single phase	40lbs (18kg)
Pump weight three phase	40lbs (18kg)
Maximum submergence	30 feet (9m)
Discharge size, standard	2 inch NPT female vertical
Maximum temp. of pumped fluid	104°F (40°C)

CABLE SPECIFICATIONS

MODEL	PHASE/VOLTAGE	POWER CABLE	LENGTH	OUTER JACKET
SE-100	1Ø-115V	SJTOW 14/3	33 feet (10m)	NBR
	1Ø-230V	SJTOW 16/3	33 feet (10m)	NBR
	3Ø-230V	STOW 16/4	33 feet (10m)	NBR
	3Ø-460V	STOW 16/4	33 feet (10m)	NBR
	3Ø-575V	STOW 16/4	33 feet (10m)	NBR

Power cable suitable for all standard voltages listed in “MOTOR DATA” section.

WASTEWATER SOLUTIONS LLC

Arturo Garcia
102 NE 2nd Street, Suite 510
Boca Raton FL 33432
(954) 483 9269
arturo@wws-llc.com

Specifications subject to change without notice

STANCOR	PERFORMANCE CURVE	AVENGER SERIES	SE-100
	Dwg: DS-A09-011	Rev: 2	Date: 03/16

SE-100

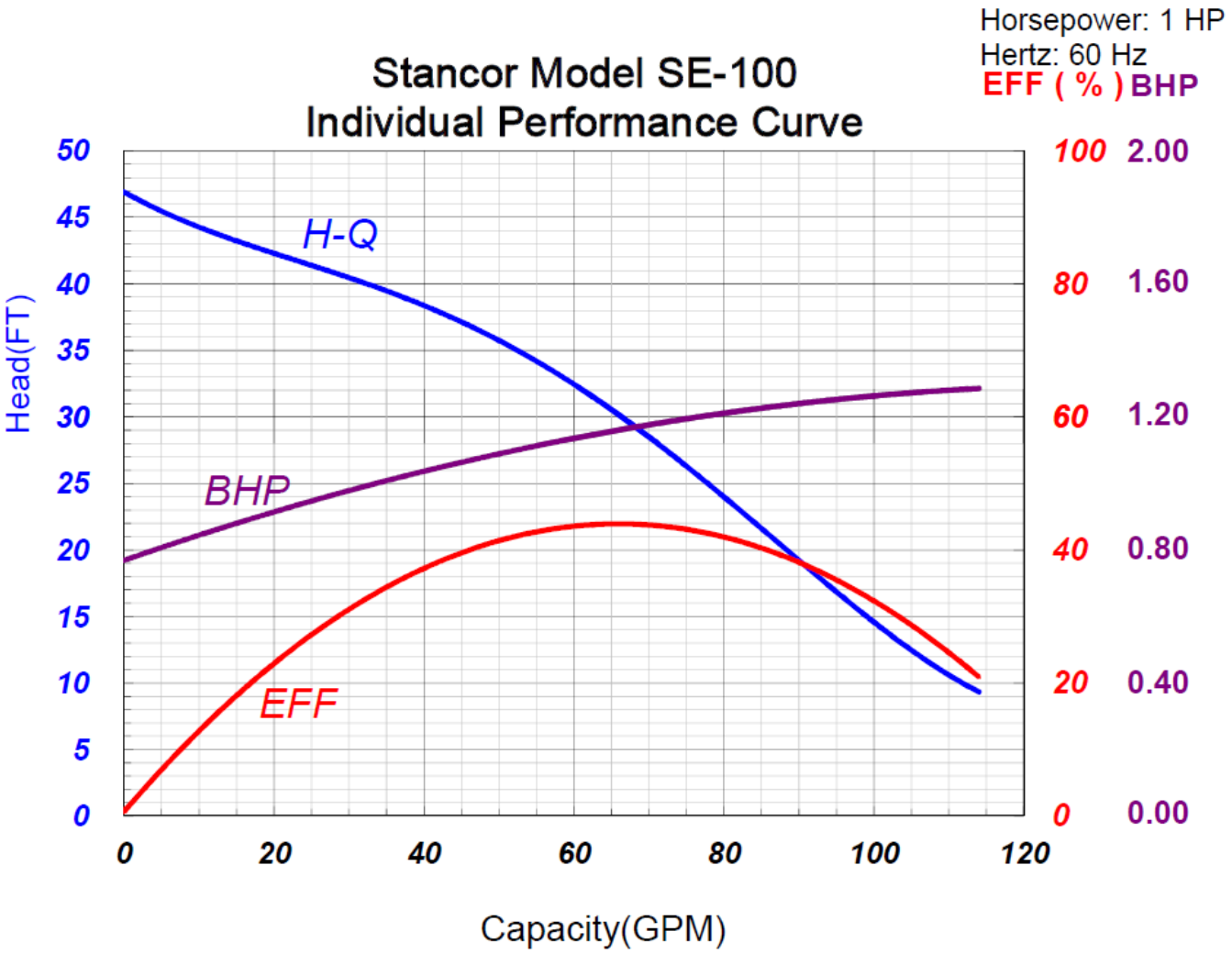

WASTEWATER SOLUTIONS LLC

Arturo Garcia
102 NE 2nd Street, Suite 510
Boca Raton FL 33432
(954) 483 9269
arturo@wws-llc.com

Specifications subject to change without notice

STANCOR	Dimensions	AVENGER SERIES	SE-100
	Dwg: DS-A09-012	**Rev:** 1	**Date:** 05/15

SE-100

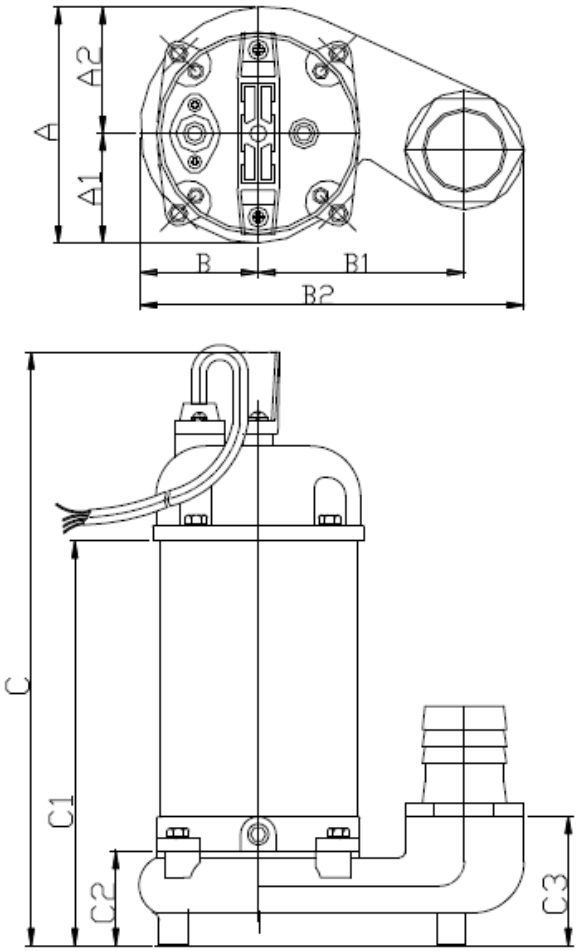

Type	DISCHARGE	A	A1	A2	B	B1	B2	C	C1	C2	C3
INCHES	2”	5.71”	2.60”	3.07”	5.20”	2.83”	9.09”	19.53”	13.35”	4.33”	4.33”

WASTEWATER SOLUTIONS LLC

Arturo Garcia
102 NE 2nd Street, Suite 510
Boca Raton FL 33432
(954) 483 9269
arturo@wws-llc.com

Specifications subject to change without notice

3-PHASE SIMPLEX CONTROL PANEL

INCORPORATING AUTOMATION TO IMPROVE RELIABILITY AND SYSTEM EFFICIENCIES

The CB2000 is a standard 3-phase Simplex pump control that provides the base for additional customization. Simplex controls provide dependable, automatic operation of a single pump. Optional features can be added to the standard package to create a unique solution for individual needs.

Newfound efficiencies, impacting both energy consumption and costs, can result from implementing controls to achieve benefits associated with automation.

Stancor helps you capture savings by providing the best of both worlds—large enough to leverage global experience and small enough to offer local service and support.

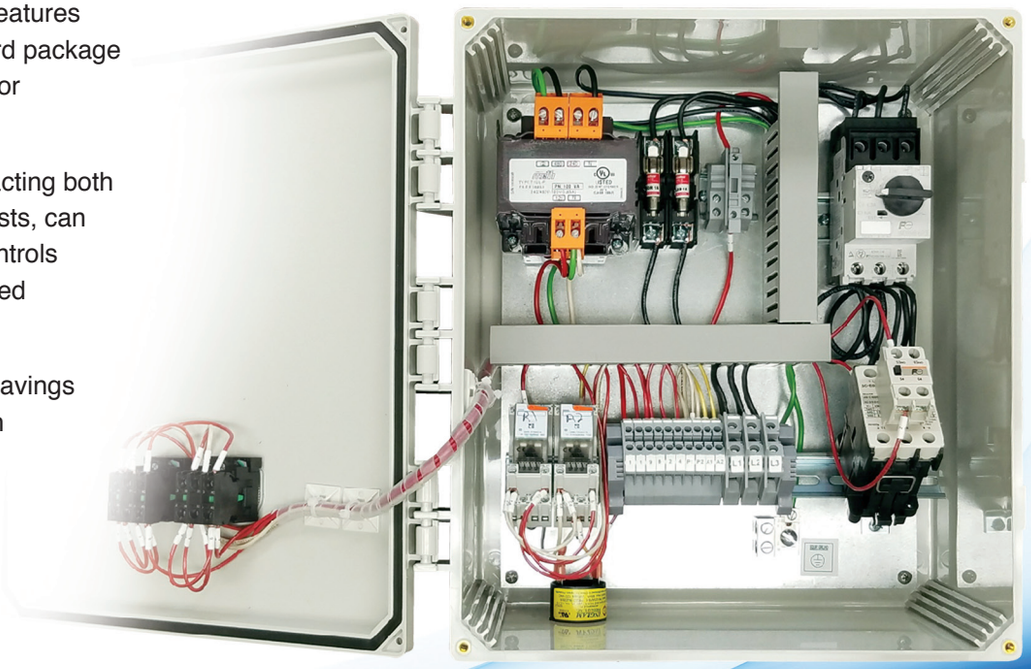

STANCOR™
Pump & Control Solutions

BUILDING TRADES I CONSTRUCTION I MINING I UTILITIES I WASTEWATER

APPLICATIONS

Simplex controls panels are used in a variety of applications, including construction, irrigation systems, lift stations, mining and utilities. The core design, and accompanying features, are intended to be robust enough for general purpose. Customization from this base design can then occur for specialty applications.

FRONT COVER

INTERIOR COMPONENTS

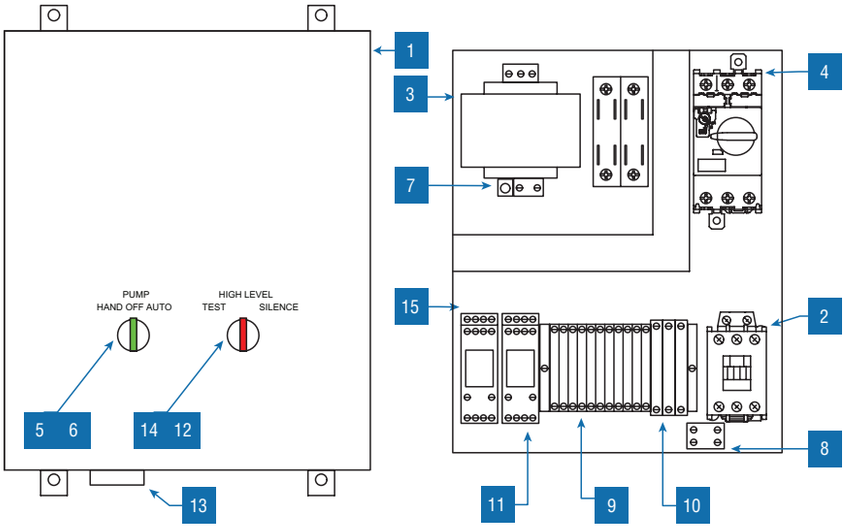

Dimensions: 14 wide / 12 tall / 7 deep

FEATURES

STANDARD COMPONENTS

1 14 x 12 x 7 NEMA 4X polycarbonate enclosure
2 IEC motor contactor
3 Multi-tap transformer
4 Motor protective switch (overload)
5 HOA (Hand/Off/Auto) switches
6 Green pump run indicator lights
7 Alarm/Control fuse
8 Ground lugs
9 Float switch terminal block angled for ease of field installation
10 Input power terminal block angled for ease of field installation
11 Alarm relay for dry contacts

STANDARD ALARM PACKAGE

12 Indicator light for visual check
13 Sonalert audible alarm
14 Exterior alarm test with silence
15 Horn silence relay

G&G Controls, a division of Stancor acquired in 2016, incorporates more than three decades of experience designing and building customized controls into every panel. Having a resource with such an extensive knowledge base provides the basis for consultation into design modifications. Projects benefit from an extensive knowledge of code and certification for both UL 508A and UL 698A. A large installed base of standard and customized control panels allows Stancor to find the right options—every time.

ADDITIONAL OPTIONS

- High water alarm with red LED light, buzzer and test-silence switch
- Mechanical float switches with 20-, 40- or 60-foot cords
- Dry contacts for remote alarm signal
- A variety of enclosure materials, including stainless steel, depending on the application
- High alarm dry contacts

STANCOR™
Pump & Control Solutions

WWW.STANCORPUMPS.COM | 203.268.7513

© copyright 2017 Stancor, L.P.

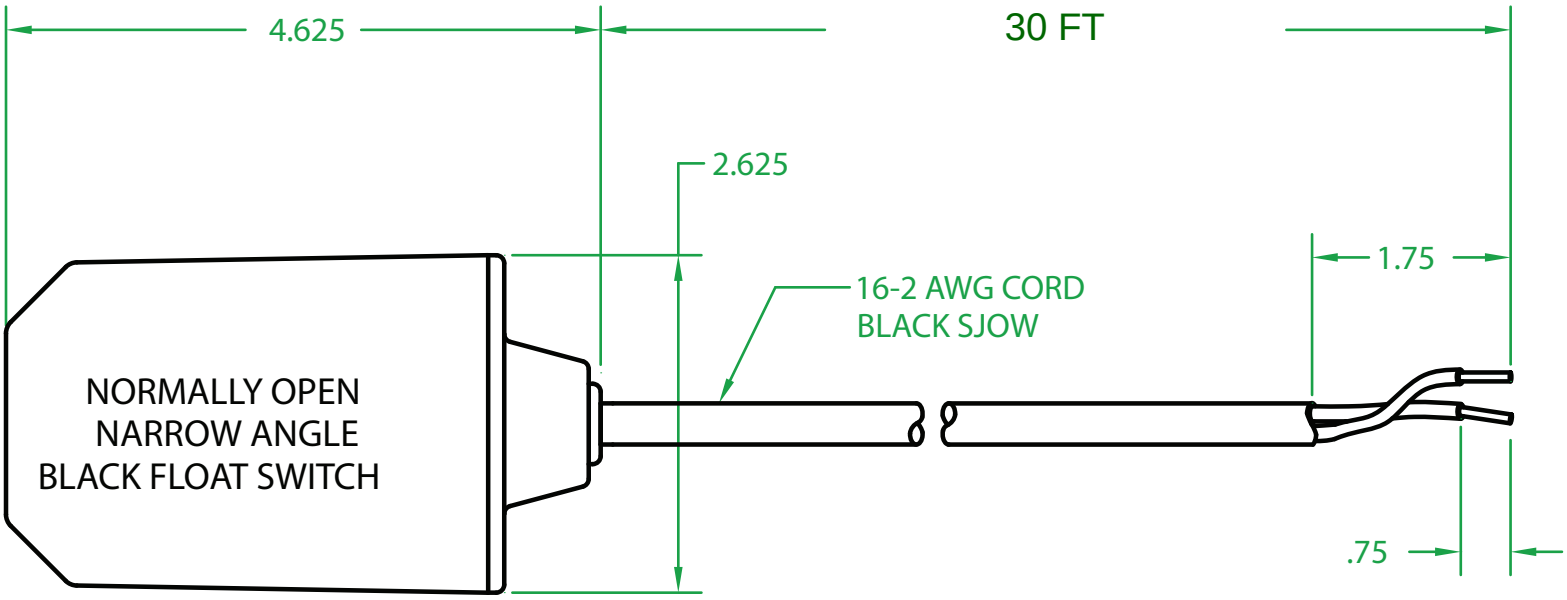

OPERATING ANGLE: TETHERLESS/INTERNALLY WEIGHTED
CONTACTS CLOSE @ 25° ABOVE HORIZONTAL.
CONTACTS OPEN @ 10° BELOW HORIZONTAL.

SWITCHING DIFFERENTIAL: 3.50”

ELECTRICAL RATINGS: 1/4 H.P. 10 AMPS @ 120/240 VAC. 34.8 LRA

FLOAT MATERIAL: A.B.S.

WASTEWATER SOLUTIONS LLC

Arturo Garcia
102 NE 2nd Street, Suite 510
Boca Raton FL 33432
(954) 483 9269
arturo@wws-llc.com