# STANCOR
# Oil-Minder® Simplex & Duplex
# Pump and Control Systems

Solid State, NEMA 4x
Oil-Minder® Control

The Stancor Oil-Minder® Control and Pump System allows water to be automatically pumped from elevator pits, transformer vaults, and industrial sumps without danger of ejecting potentially harmful oily substances into sewers, rivers and waterways. There is no need for a separate oil-water separator. The product is engineered for efficient and trouble free pumping, even under the most severe conditions. The Stancor Oil-Minder® System is the overwhelming choice among design engineers and compliance authorities worldwide, and has a proven record for protecting valuable equipment and the environment.

## Features

- NEMA 4x weathertight corrosion resistant polycarbonate enclosures
- Stainless steel sensor probe with patented electronic technology that repels dirt contamination
- Single direct plug-in power source for operation of entire system
- Solid state components
- Alarms, lights, silence switch, and remote monitoring circuit for oil, high liquid, and high amperage conditions
- Complete factory assembly and testing insures quality of entire pump and control system
- Patented - Pat. #4,715,785, #4,752,188, #6,203,281 and others pending
- Oil-Minder® System can be combined with a variety of different pumps and valves
- Choice of: 115v or 220v (1 phase) OR 230v/460v/575v (3 phase)
- LED indicator lights for oil spill, power, high liquid level, overload, and pump run
- UL 508 and 778 approved
- ENTELA tested and approved as a system

"There Is Only One Oil-Minder® System and Stancor Makes It"
Quality You Can Believe In

# Description of Stancor Simplex Oil-Minder® Systems

The **Stancor Simplex Oil-Minder® System** is available in two primary configurations, as follows:

The **Multi-Option Oil-Minder® System** is designed for easy, fool-proof installation. All pump and control cables are factory wired into a wall mountable junction box. Between the junction box and the main Oil-Minder® control panel is a multi-pin quick connect cable. This single cord, 8-pin system allows the electrical cable between the junction box and control panel to be run through conduit and interconnected up to 250 feet long, using a single "push and turn" motion. There is no need for field wiring. Electrical installation costs are reduced by approximately 75% and all connections are secure and water-tight.

The **Junior Oil-Minder® System** is a good choice where the main control is located in the same area as the pump pit, or where the main control will be located remotely and conventional "hard wiring" is used between a junction box and the main control. Comparative features of each model are as follows:

| Feature included in standard package | O/M Multi-Option | O/M Junior |
|---|---|---|
| SE-40 (.4 HP) or SE-50 (.5 HP) 115V or 230V single phase pump | x | x |
| Solid state NEMA 4x control panel | x | x |
| Separate LED indicator lights on NEMA 4x control for A) oil alert, B) high water, C) high motor amps, D) power to system, and E) pump activation | x | x |
| Self cleaning, hermetically sealed stainless steel oil detection probe | x | x |
| Float switches for pump activation and high water alert | x | x |
| Monitoring relays for alert conditions at remote locations | x | x |
| High decibel, water tight horn and silence switch for alert conditions | x | x |
| Direct plug-in activation of entire pump and control system from the main control panel (6' cord and molded plug included) | x | x |
| Factory hard wiring of pump, oil probe, and floats into NEMA 4x junction box | x | |
| Factory hard wiring of pump, oil probe, and floats directly into main NEMA 4x control panel | | x |
| Junction box with female 8-pin cable receptacle and disconnect | x | |
| 25' 8-pin Quick Connect cable (expandable to 250' with interconnecting extension cables) | x | |
| Female 8-pin cable receptacle installed in the NEMA 4x control panel | x | |

# Stancor Simplex Oil-Minder® Controls

## Oil-Minder® Multi-Option

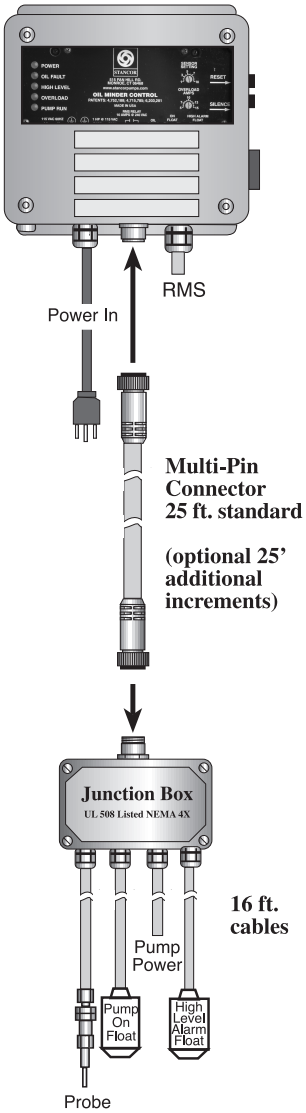


**With Selected Pump**

## Oil-Minder® Junior

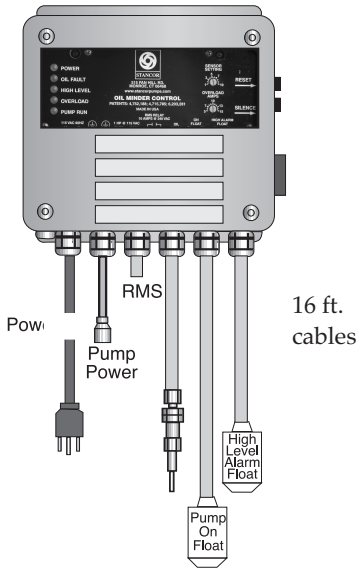


**With Selected Pump**

# Standard Pump Selection Chart

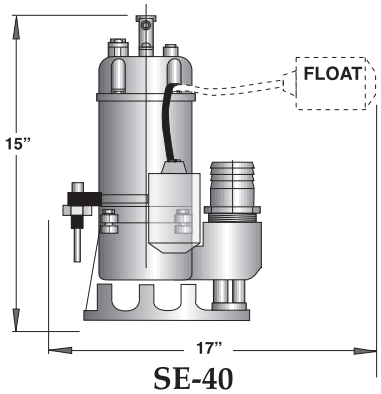


**SE-40**

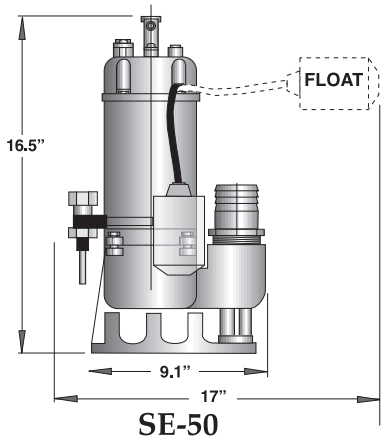


**SE-50**

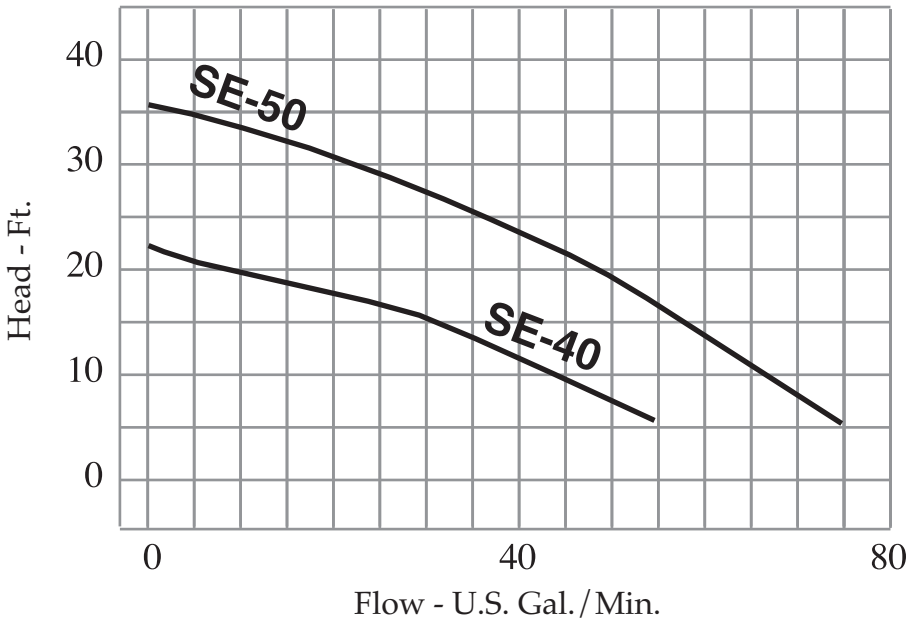


**General & Electrical Specifications (Special voltages and pump models available upon request)**

| Model | H.P. | Voltage | RPM | Rated Full-Load Amps | Discharge Size | Max Head Ft. | Max Flow GPM |
|---|---|---|---|---|---|---|---|
| SE50 | 0.5 | 115/230<br>460 | 3600 | 8/4 | 2″ | 37′ | 74 |
| SE40 | 0.4 | 115 | 3600 | 5 | 2″ | 22′ | 64 |

STANCOR

# Typical Stancor Simplex Multi-Option Oil-Minder® System

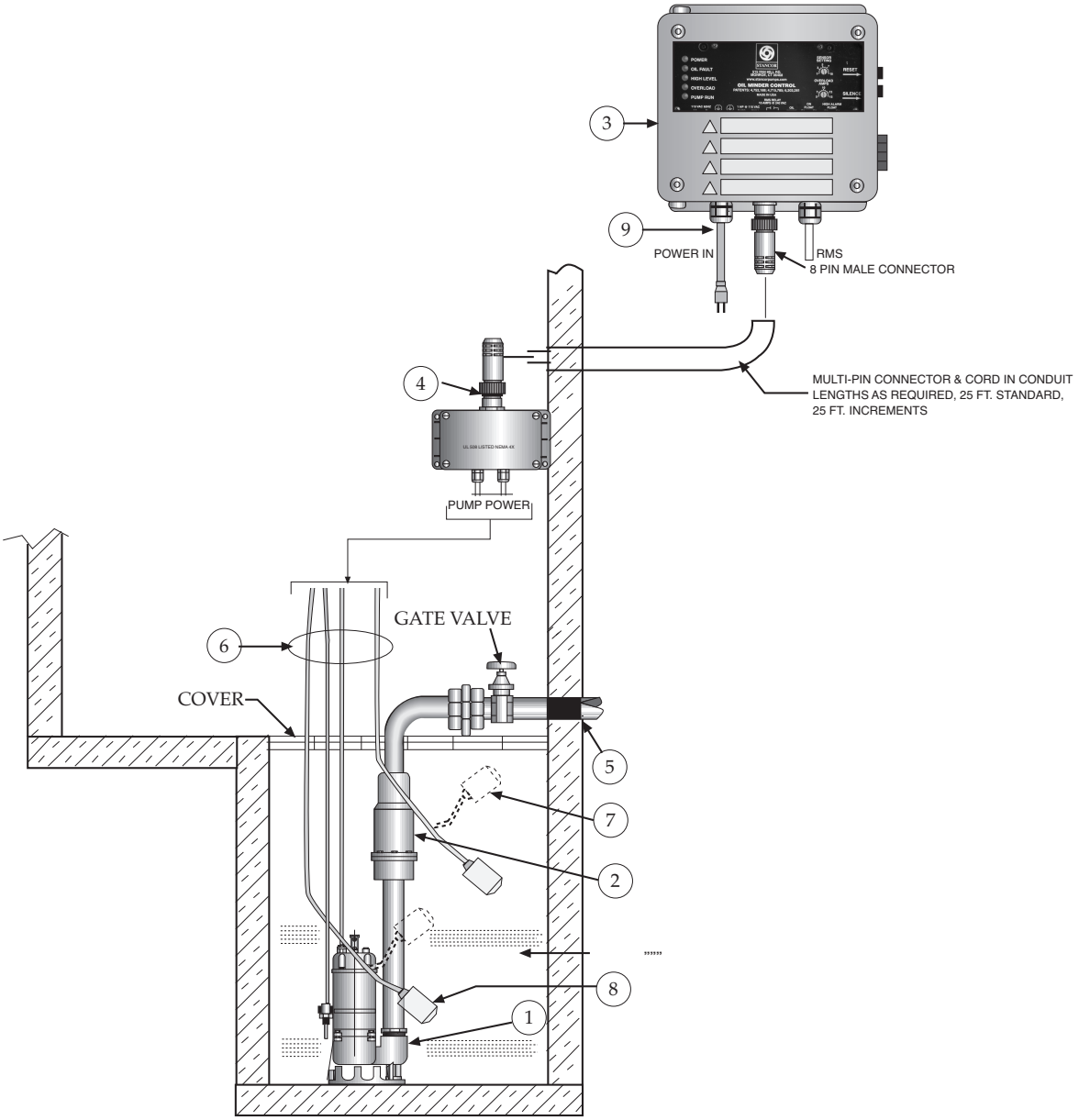


1. Stancor Model SE-50 submersible effluent pump .5 HP, 115 volt, 3600 RPM, 2" discharge connection
2. Check valve (2")
3. Stancor Oil-Minder 115V, 1Ø control system with built-in audible and visual alarm when pump does not run due to oil in pit or high liquid or high amperage condition. Provide silencing button for audible alarm built into panel. Panel shall have two contacts for a remote alarm location (one each for oil and high water or amperage alert). Junction box will be provided with multi-pin connector and cord in lengths as required, 25 ft. standard, optional 25 ft. increments.
4. Junction box will be provided with multi-pin connector and cord in lengths as required; 25 ft. is standard, optional 25 ft. increments available up to 250 ft.
5. All buried pump pressure discharge piping shall be protected with tapecoat CT corrosion protection tape
6. Pump cable, probe cable, high liquid alarm cable, and pump "on" float cable (16 ft. lengths)
7. High liquid alarm float with clamp device to mount to pump discharge piping
8. Pump On float
9. Power cord and molded ground plug (6 ft. length)

ITEMS 1, 2, 3, 4, 6, 7, 8 AND 9 PROVIDED BY STANCOR AS A STANDARD PACKAGE

# Stancor Duplex Oil-Minder® System

The Stancor Duplex Oil-Minder® System provides for all the safety and operational features of the Simplex System, while allowing two pumps to operate together in the same sump.

The Duplex Oil-Minder® Control alternates each pump upon start-up, assuring equal run time and wear. In the event of heavy inflow, both pumps will operate together until the water level recedes and both pumps are deactivated. The high level/lag pump float will activate an alarm if the water condition continues after a pre-set time point is reached (set for 6 seconds, adjustable between 6 seconds and 10 minutes). An alarm and separate diagnostic LED lights are provided for oil alert, high water, and high amperage (pump overload) conditions. Remote monitoring relays are also provided for alert conditions. A silence and reset switch clears the alarm mode once a fault is addressed. In addition, there are LED lights to "power" the system and to indicate "pump 1" and "pump 2" activation. As with all Stancor Oil-Minder® Systems, oil is contained in the sump while water is pumped on a fully automatic basis, assuring protection of the environment, personnel, and valuable equipment–even during an alarm condition.

The standard Stancor Duplex Oil-Minder® System includes two SE-50 pumps (115v or 230v). However, Stancor can provide systems with any of its wide range of pumps up to 75 HP, with electrical provisions that meet the customer's requirements.

# Typical Stancor Duplex Oil-Minder® System

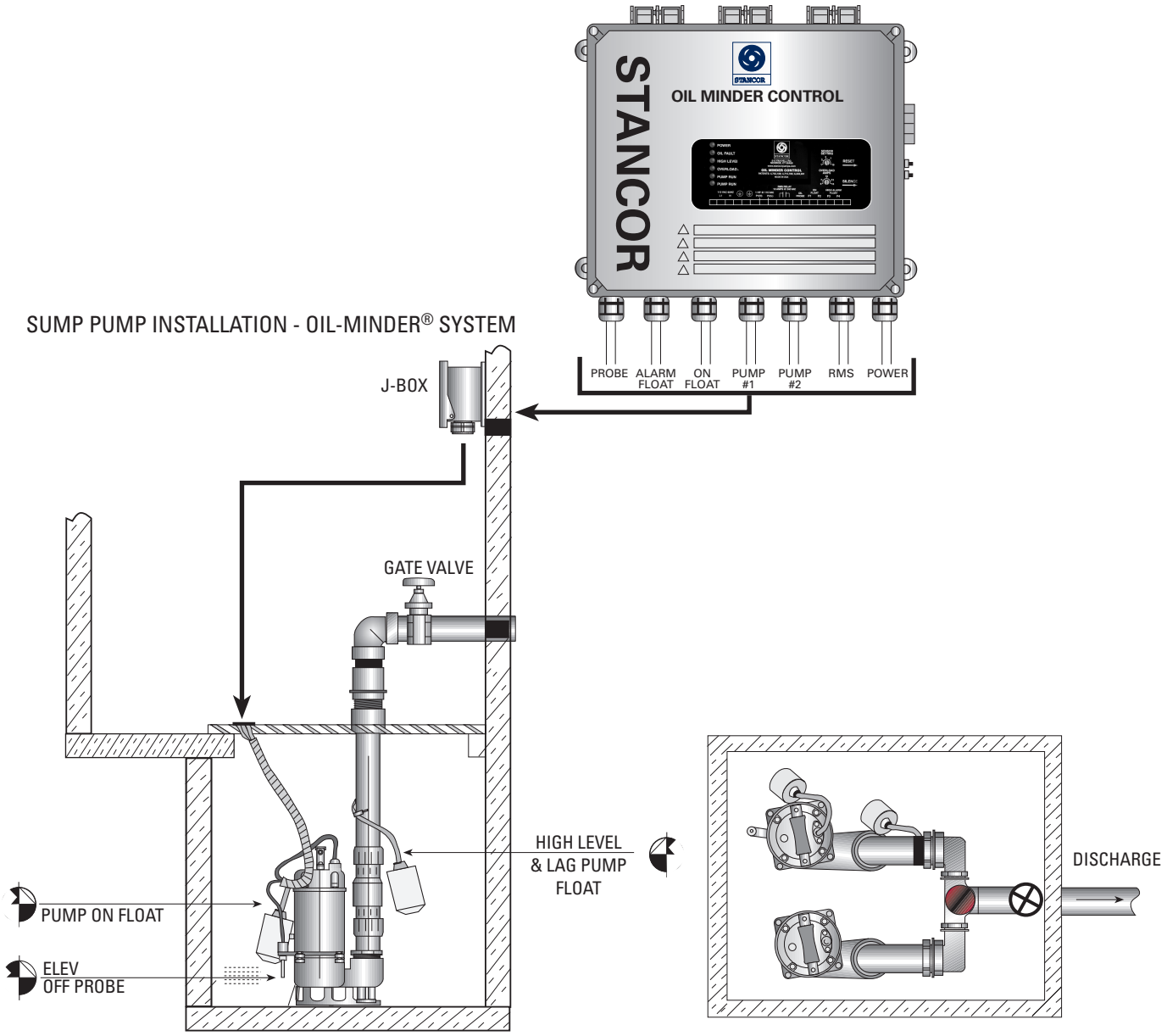

# Special Small Sump Installation

SB-12 OIL MINDER SYSTEM

WITH OM-300 VERTICAL FLOATS & PROBE
FOR SMALL SUMP APPLICATIONS

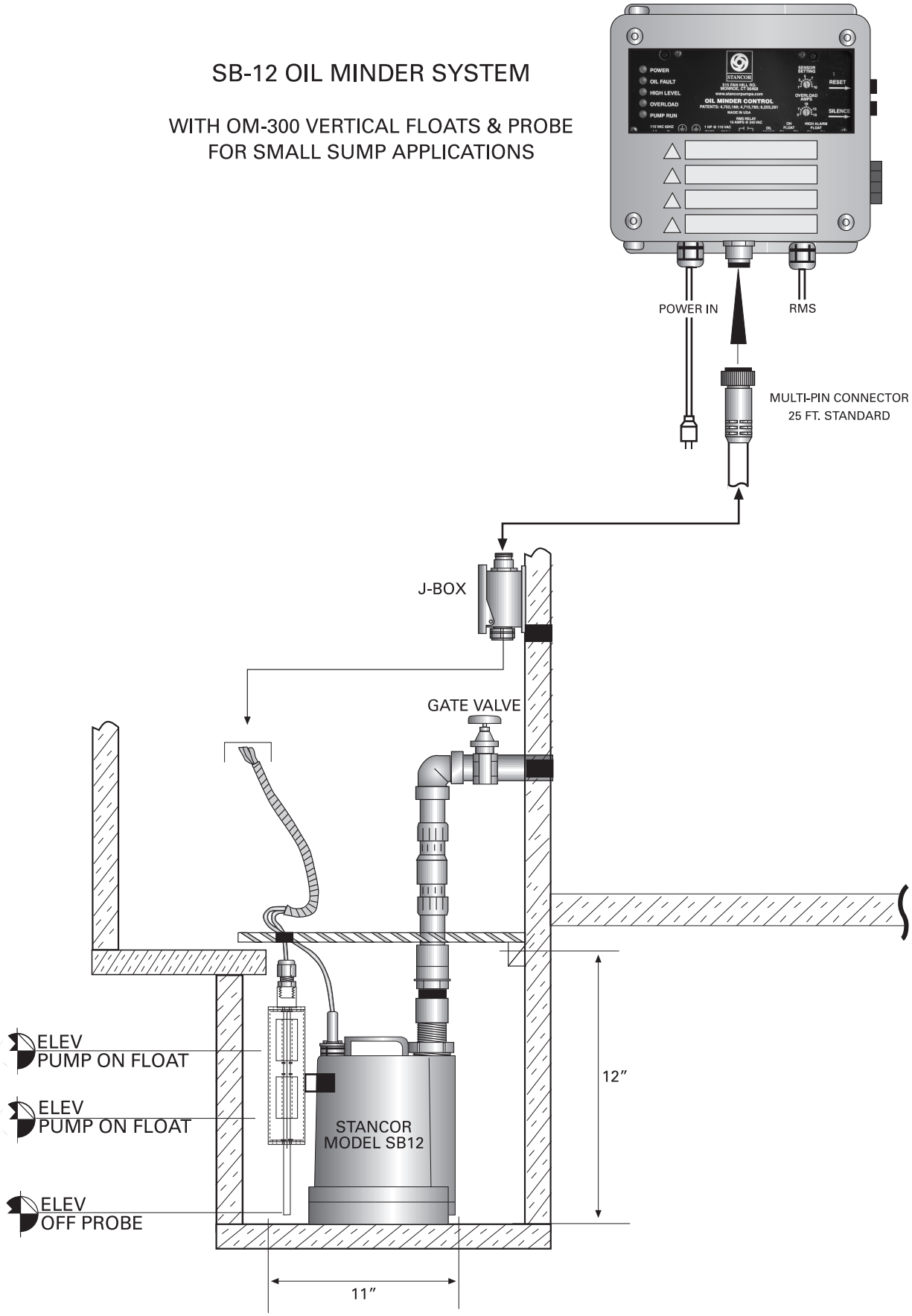

# Additional Pump Selections

ASME A 17.1 Section 2.2.2.5 (2007) requires that, for each building elevator, the elevator sump pump shall be capable of pumping at least 3,000 gallons per hour. Therefore, after considering vertical lift and pipe friction losses, a larger pump selection may be necessary for certain projects.

No matter what the pump capacity requirement may be, Stancor has an Oil-Minder® System that will do the job.

Please refer to the chart below for additional commonly specified pump selections. Stancor manufactures pumps up to 75 HP, details of which can be found at www.stancorpumps.com.

| Specifications | Output | | Discharge | | Rated | | Cable |
|---|---|---|---|---|---|---|---|
| Pump & System Model | HP | Voltage | Amps | In. | Max. Head (ft) | Max. Capacity | Length (ft) |
| SE-40 O/M | 4/10 | 115 | 5 | 2″ | 22 | 64 GPM | 16 |
| SE-50 O/M | 1/2 | 115/220/460 | 8/4/2 | 2″ | 37 | 74 GPM | 16 |
| SE-100 O/M | 1 | 115/220/460 | 14/7/3.5 | 2″ | 50 | 100 GPM | 33 |
| SE-100HH O/M | 1 | 115/220/460 | 16/8/4.5 | 2″ | 80 | 80 GPM | 33 |
| SE-200 O/M | 2 | 220/230/460 | 21/10/5.5 | 2″ (3″) | 62 | 172 GPM | 33 |
| SV-300 O/M | 3 | 230/460 | 9/5.2 | 3″ (4″) | 70 | 210 GPM | 33 |
| SV-500 O/M | 5 | 230/460 | 15/8.6 | 3″ (4″) | 80 | 280 GPM | 33 |
| SV-750 O/M | 7.5 | 230/460 | 22.5/12.8 | 3″ (4″) | 90 | 330 GPM | 33 |

1. Guiderail system must be ordered separately
2. Elbow with female threaded connection provided
3. 208V available as special order
4. Models up to 7 amps are available with 8-pin quick connect cable and standard on all "O/M Multi-Option" Systems

## Series SE Performance Curves

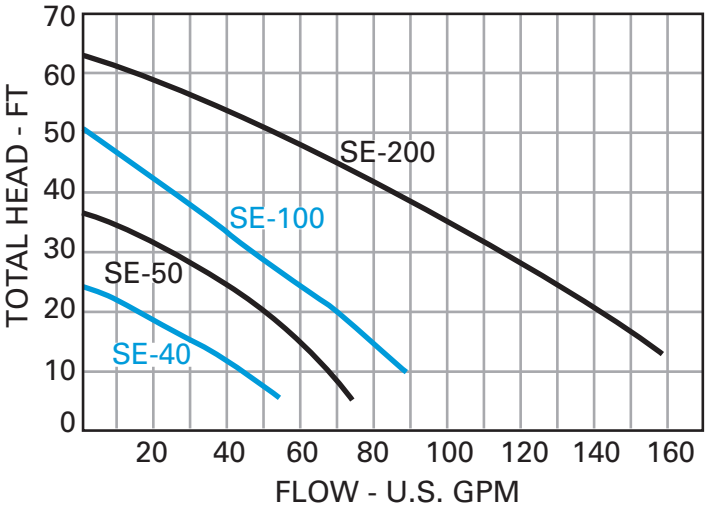


## Series SV Performance Curves

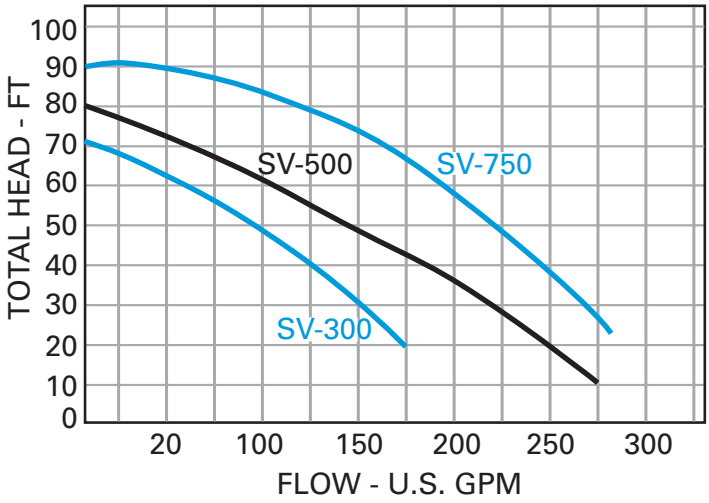



STANCOR

**Stancor, Inc.**
**515 Fan Hill Road • Monroe, CT 06468**
**Phone 203-268-7513 • Fax 203-268-7958 • www.stancorpumps.com**