STANCOR
Oil-Minder® Simplex & Duplex
Pump and Control Systems

The Stancor Oil-Minder® Control and Pump System allows water to be automatically pumped from elevator pits, transformer vaults, and industrial sumps without danger of ejecting potentially harmful oily substances into sewers, rivers and waterways. There is no need for a separate oil-water separator. The product is engineered for efficient and trouble free pumping, even under the most severe conditions. The Stancor Oil-Minder® System is the overwhelming choice among design engineers and compliance authorities worldwide, and has a proven record for protecting valuable equipment and the environment.

Features

- NEMA 4x weathertight corrosion resistant polycarbonate enclosures
- Stainless steel sensor probe with patented electronic technology that repels dirt contamination
- Single direct plug-in power source for operation of entire system
- Solid state components
- Alarms, lights, silence switch, and remote monitoring circuit for oil, high liquid, and high amperage conditions
- Complete factory assembly and testing insures quality of entire pump and control system
- Patented - Pat. #4,715,785, #4,752,188, #6,203,281 and others pending
- Oil-Minder® System can be combined with a variety of different pumps and valves
- Choice of: 115v or 220v (1 phase) OR 230v/460v/575v (3 phase)
- LED indicator lights for oil spill, power, high liquid level, overload, and pump run
- UL 508 and 778 approved
- ENTELA tested and approved as a system

"There Is Only One Oil-Minder® System and Stancor Makes It"
Quality You Can Believe In

Description of Stancor Simplex Oil-Minder® Systems

The **Stancor Simplex Oil-Minder® System** is available in two primary configurations, as follows:

The **Multi-Option Oil-Minder® System** is designed for easy, fool-proof installation. All pump and control cables are factory wired into a wall mountable junction box. Between the junction box and the main Oil-Minder® control panel is a multi-pin quick connect cable. This single cord, 8-pin system allows the electrical cable between the junction box and control panel to be run through conduit and interconnected up to 250 feet long, using a single "push and turn" motion. There is no need for field wiring. Electrical installation costs are reduced by approximately 75% and all connections are secure and water-tight.

The **Junior Oil-Minder® System** is a good choice where the main control is located in the same area as the pump pit, or where the main control will be located remotely and conventional "hard wiring" is used between a junction box and the main control. Comparative features of each model are as follows:

Feature included in standard package	O/M Multi-Option	O/M Junior
SE-40 (.4 HP) or SE-50 (.5 HP) 115V or 230V single phase pump	x	x
Solid state NEMA 4x control panel	x	x
Separate LED indicator lights on NEMA 4x control for A) oil alert, B) high water, C) high motor amps, D) power to system, and E) pump activation	x	x
Self cleaning, hermetically sealed stainless steel oil detection probe	x	x
Float switches for pump activation and high water alert	x	x
Monitoring relays for alert conditions at remote locations	x	x
High decibel, water tight horn and silence switch for alert conditions	x	x
Direct plug-in activation of entire pump and control system from the main control panel (6' cord and molded plug included)	x	x
Factory hard wiring of pump, oil probe, and floats into NEMA 4x junction box	x	
Factory hard wiring of pump, oil probe, and floats directly into main NEMA 4x control panel		x
Junction box with female 8-pin cable receptacle and disconnect	x	
25' 8-pin Quick Connect cable (expandable to 250' with interconnecting extension cables)	x	
Female 8-pin cable receptacle installed in the NEMA 4x control panel	x	

Stancor Simplex Oil-Minder® Controls

Oil-Minder® Multi-Option

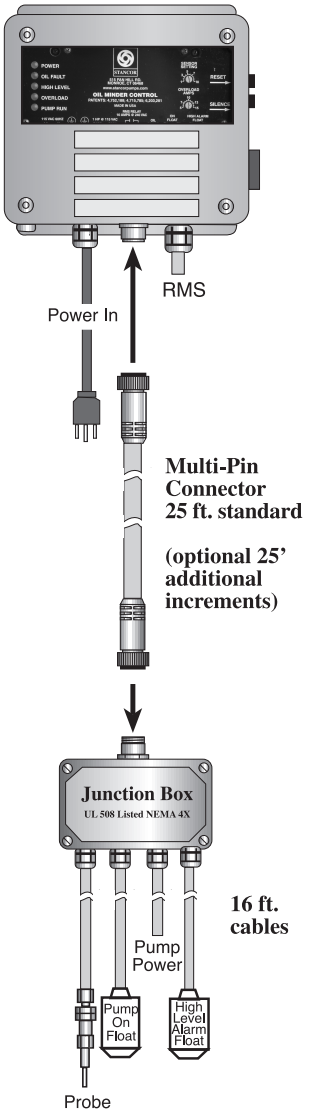

With Selected Pump

Oil-Minder® Junior

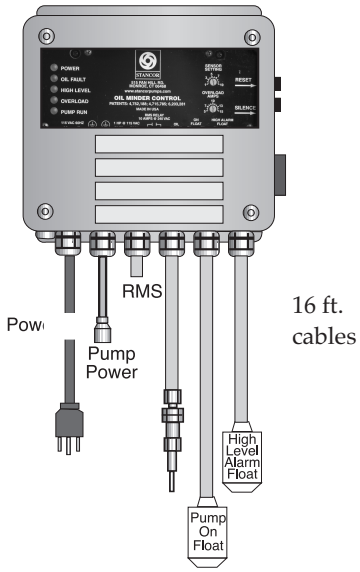

With Selected Pump

Standard Pump Selection Chart

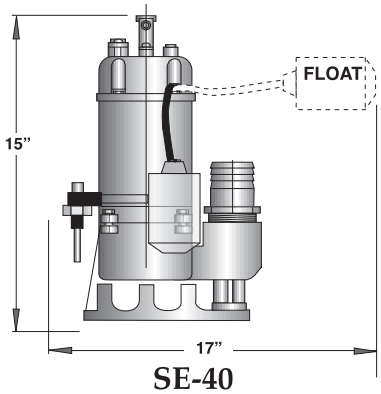

SE-40

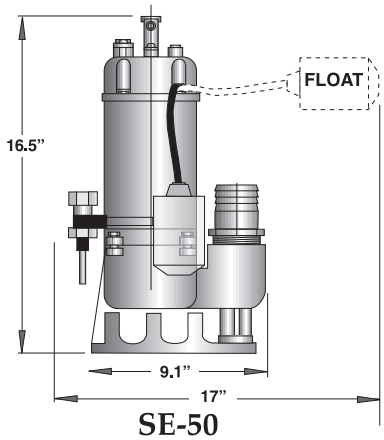

SE-50

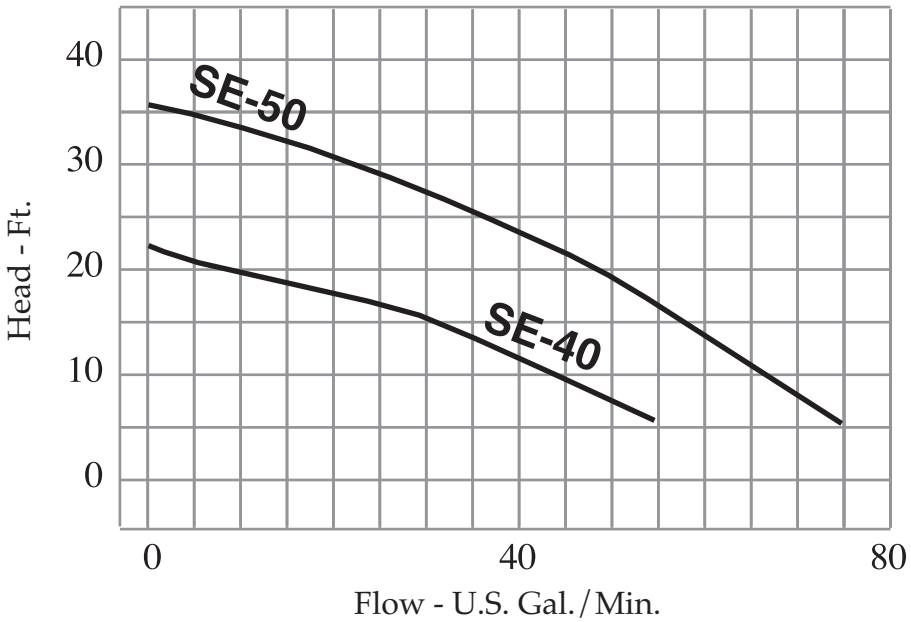

General & Electrical Specifications (Special voltages and pump models available upon request)

Model	H.P.	Voltage	RPM	Rated Full-Load Amps	Discharge Size	Max Head Ft.	Max Flow GPM
SE50	0.5	115/230 460	3600	8/4	2″	37′	74
SE40	0.4	115	3600	5	2″	22′	64

STANCOR

Typical Stancor Simplex Multi-Option Oil-Minder® System

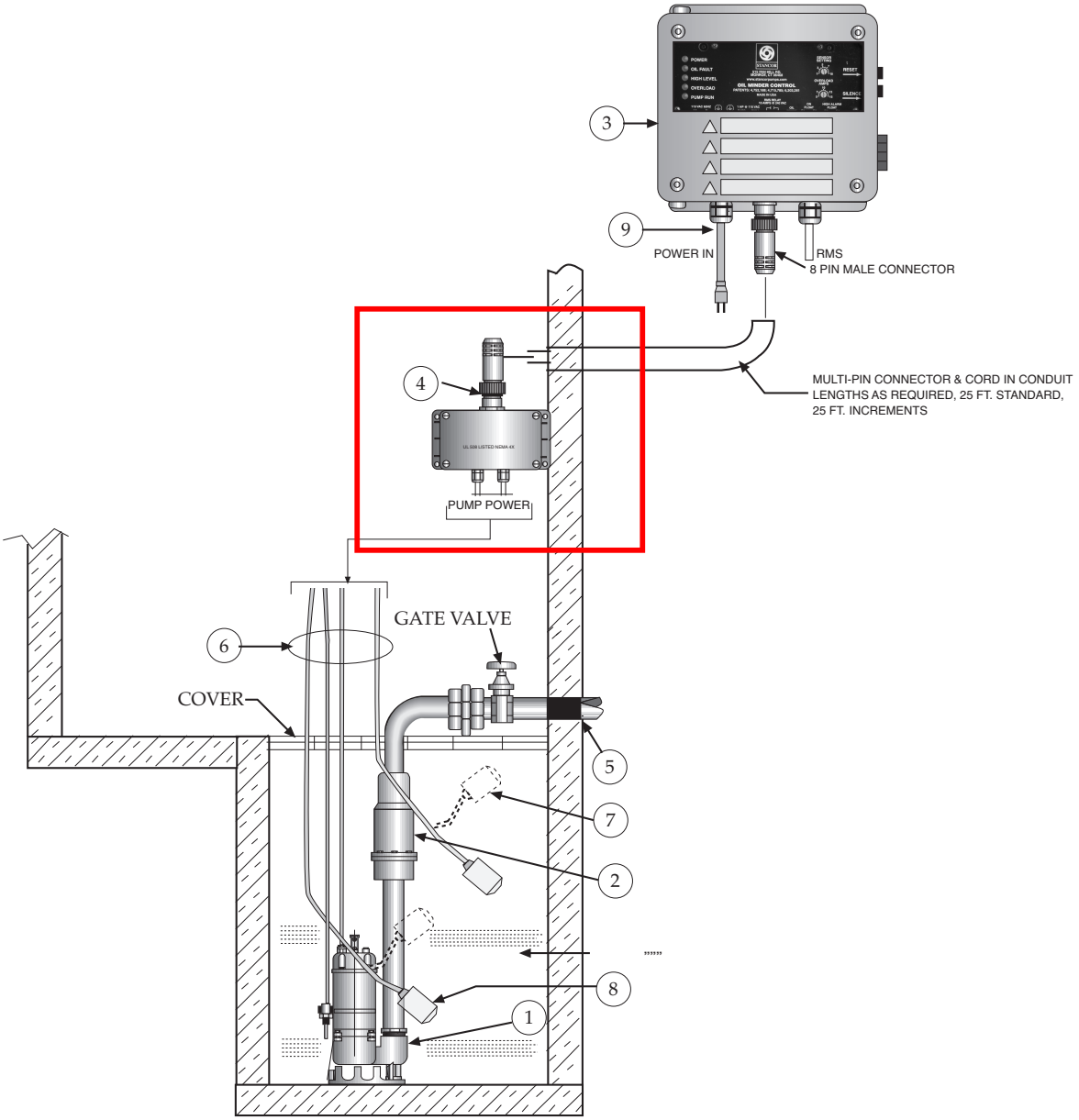

1. Stancor Model SE-50 submersible effluent pump .5 HP, 115 volt, 3600 RPM, 2" discharge connection
2. Check valve (2")
3. Stancor Oil-Minder 115V, 1Ø control system with built-in audible and visual alarm when pump does not run due to oil in pit or high liquid or high amperage condition. Provide silencing button for audible alarm built into panel. Panel shall have two contacts for a remote alarm location (one each for oil and high water or amperage alert). Junction box will be provided with multi-pin connector and cord in lengths as required, 25 ft. standard, optional 25 ft. increments.
4. Junction box will be provided with multi-pin connector and cord in lengths as required; 25 ft. is standard, optional 25 ft. increments available up to 250 ft.
5. All buried pump pressure discharge piping shall be protected with tapecoat CT corrosion protection tape
6. Pump cable, probe cable, high liquid alarm cable, and pump "on" float cable (16 ft. lengths)
7. High liquid alarm float with clamp device to mount to pump discharge piping
8. Pump On float
9. Power cord and molded ground plug (6 ft. length)

ITEMS 1, 2, 3, 4, 6, 7, 8 AND 9 PROVIDED BY STANCOR AS A STANDARD PACKAGE

Additional Pump Selections

ASME A 17.1 Section 2.2.2.5 (2007) requires that, for each building elevator, the elevator sump pump shall be capable of pumping at least 3,000 gallons per hour. Therefore, after considering vertical lift and pipe friction losses, a larger pump selection may be necessary for certain projects.

No matter what the pump capacity requirement may be, Stancor has an Oil-Minder® System that will do the job.

Please refer to the chart below for additional commonly specified pump selections. Stancor manufactures pumps up to 75 HP, details of which can be found at www.stancorpumps.com.

Specifications		Output		Discharge	Rated		Cable
Pump & System Model	HP	Voltage	Amps	In.	Max. Head (ft)	Max. Capacity	Length (ft)
SE-40 O/M	4/10	115	5	2″	22	64 GPM	16
SE-50 O/M	1/2	115/220/460	8/4/2	2″	37	74 GPM	16
SE-100 O/M	1	115/220/460	14/7/3.5	2″	50	100 GPM	33
SE-100HH O/M	1	115/220/460	16/8/4.5	2″	80	80 GPM	33
SE-200 O/M	2	220/230/460	21/10/5.5	2″ (3″)	62	172 GPM	33
SV-300 O/M	3	230/460	9/5.2	3″ (4″)	70	210 GPM	33
SV-500 O/M	5	230/460	15/8.6	3″ (4″)	80	280 GPM	33
SV-750 O/M	7.5	230/460	22.5/12.8	3″ (4″)	90	330 GPM	33

1. Guiderail system must be ordered separately
2. Elbow with female threaded connection provided
3. 208V available as special order
4. Models up to 7 amps are available with 8-pin quick connect cable and standard on all "O/M Multi-Option" Systems

Series SE Performance Curves

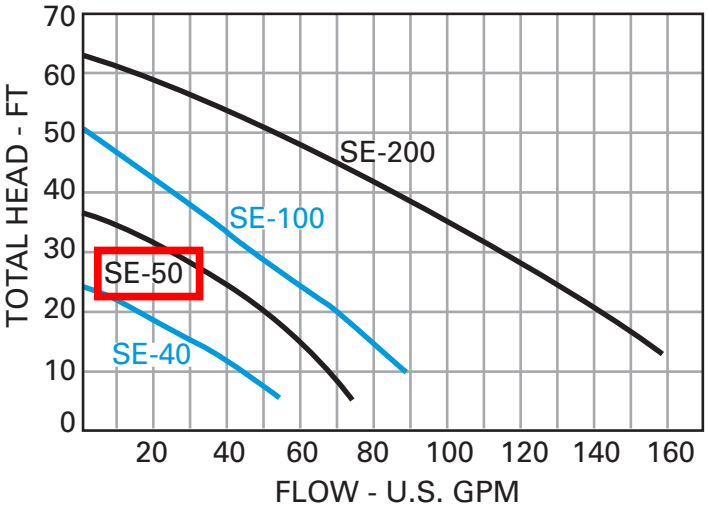

Series SV Performance Curves

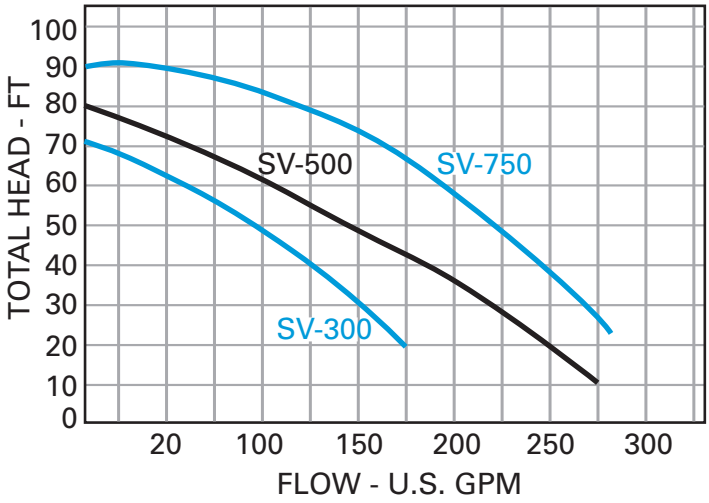

STANCOR

Stancor, Inc.
515 Fan Hill Road • Monroe, CT 06468
Phone 203-268-7513 • Fax 203-268-7958 • www.stancorpumps.com

STANCOR	TECHNICAL DATA	AVENGER SERIES	SE-50
	Dwg: DS-A09-005	Rev: 2	Date: 01/16

MOTOR SPECIFICATIONS

Motor Design	Induction
Motor Type	Enclosed submersible
Insulation Class	Class E
Motor Protection	Bi-metallic Thermal Switch
Bi-Metallic Temp Trip	120° C ± 5° C
Service Factor	1.3
Voltage Tolerance	± 10% from nominal

MOTOR DATA, 60Hz

Model	Phase	Output Power BHP	Volts	Full Load Amps	Locked Rotor Amps	NEMA Code Letter	Power Factor 100% Load	Motor Efficiency 100% Load	Pole/ Speed (rpm)
SE-50	1	0.5	115	8.0	40.00	L	0.96	0.63	2/3450
	1	0.5	230	4.0	20.00	L	0.96	0.62	2/3450
	3	0.5	**208**	2.0	10.00	J	0.87	0.67	2/3450
	3	0.5	460	1.0	6.00	L	0.83	0.75	2/3450
	3	0.5	575	0.8	4.00	J	0.84	0.75	2/3450

MATERIALS OF CONSTRUCTION

Upper Motor Lid	Nylon 66
Motor Housing	AISI 304 Stainless Steel
Oil Chamber	FC-20 Cast Iron
Volute	FC-20 Cast Iron
External Hardware	AISI 304 Stainless Steel
O-Rings	Nitrile (Buna N)
Motor Shaft	Stainless Steel (410)
Upper Bearing	Single row Sealed
Lower Bearing(s)	Single row Sealed
Upper Shaft Seal	CA/CE (carbon/ceramic)
Lower Shaft Seal	SIC/SIC (silicon carbide/silicon carbide)
Impeller	FC-20 Cast Iron

DIMENSIONS, WEIGHT, AND MISC.

Pump weight single phase	29lbs (13kg)
Pump weight three phase	29bs (13kg)
Maximum submergence	30 feet (9m)
Discharge size, standard	2 inch NPT female vertical
Maximum temp. of pumped fluid	104°F (40°C)

CABLE SPECIFICATIONS

MODEL	PHASE/VOLTAGE	POWER CABLE	LENGTH	OUTER JACKET
SE-50	1Ø-115V	STJOW 16/3	16 feet (5m)	NBR
	1Ø-230V	STJOW 16/3	16 feet (5m)	NBR
	3Ø-230V	STOW 16/4	16 feet (5m)	NBR
	3Ø-460V	STOW 16/4	16 feet (5m)	NBR
	3Ø-575V	STOW 16/4	16 feet (5m)	NBR

Power cable suitable for all standard voltages listed in “MOTOR DATA” section.

Specifications subject to change without notice

Stancor, Inc. 515 Fan Hill Road, Monroe, CT 06468 Tel: 203-268-7513 Fax : 203-268-7958 www.stancorpumps.com

SE-50

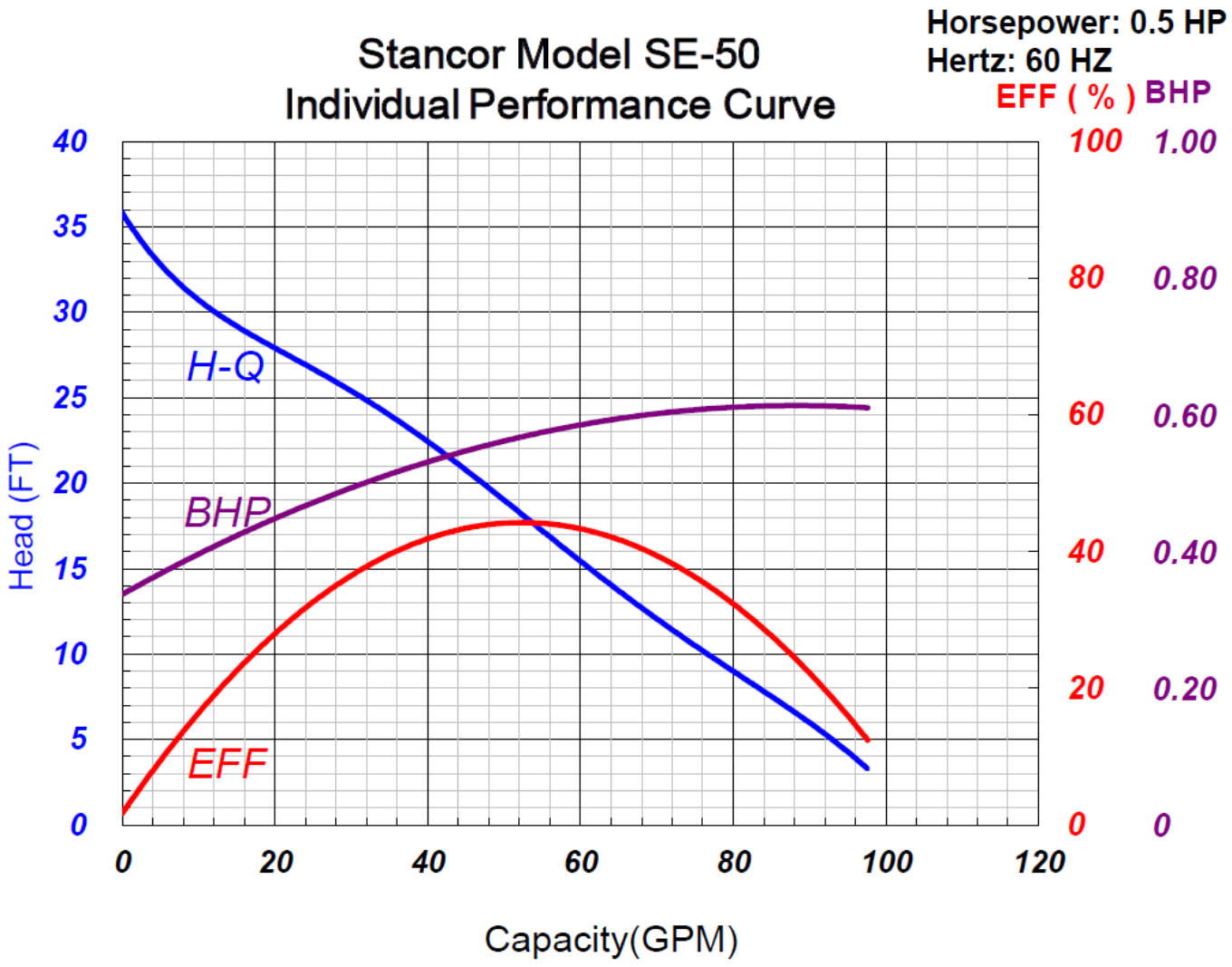
Stancor Model SE-50
Individual Performance Curve
Horsepower: 0.5 HP
Hertz: 60 HZ
EFF (%)
BHP
H-Q
BHP
EFF
Head (FT)
Capacity(GPM)
0
5
10
15
20
25
30
35
40
0
20
40
60
80
100
120
0
20
40
60
80
100
0
0.20
0.40
0.60
0.80
1.00

SE-50

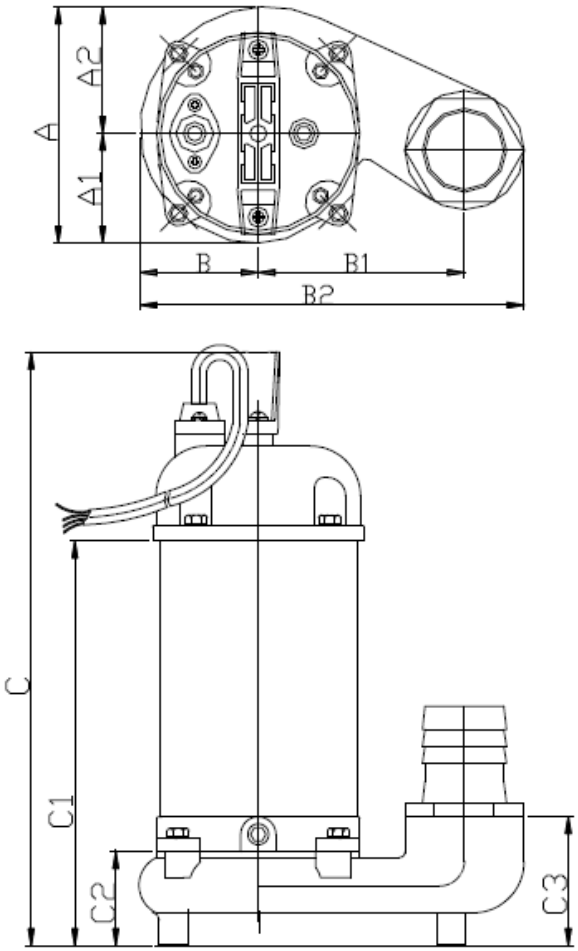

Type	DISCHARGE	A	A1	A2	B	B1	B2	C	C1	C2	C3
INCHES	2”	5.71”	2.60”	3.07”	5.20”	2.83”	9.09”	16.57”	11.46”	4.33”	4.33”

Specifications subject to change without notice

Stancor, Inc. 515 Fan Hill Road, Monroe, CT 06468 Tel: 203-268-7513 Fax : 203-268-7958 www.stancorpumps.com