INSTALLATION GUIDE:
SPOTLIGHT, PENDANT, LINEAR
LED MODULAR LIGHT SYSTEM

TRIMLESS RECESSED / RECESSED SPOTLIGHT / SPOTLIGHT / PENDANT

LINEAR CEILING / LINEAR PENDANT

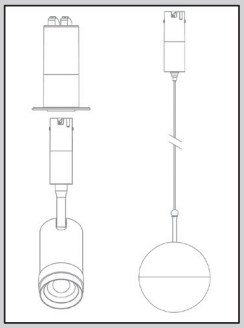

TOOLS YOU MAY NEED

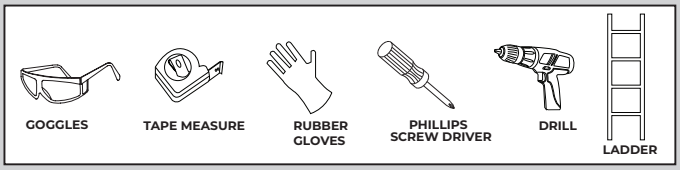

FOR YOUR SAFETY, READ AND UNDERSTAND FOLLOW INSTRUCTIONS!
KEEP THE INSTRUCTIONS IN SAFE PLACE FOR FUTURE REFERENCE!

CIRCUIT BOX

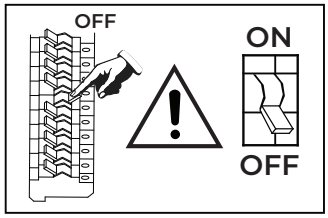

LED INFO & WARNINGS

Please read and understand the entire manual before attempting to assemble, operate, or install the product.	**Make sure that you have all necessary parts by checking the parts list. If any part is missing or damaged please contact VONN LIGHTING CUSTOMER SERVICE at 888-604-8666 for a replacement.**
All parts must be used as indicated in these instructions. Do not substitute any parts, leave parts out, or use any parts that are worn or broken.	**Inspect the LED fixture prior to installation to make sure that it has not been damaged during shipping.**
Please handle the LED light with care when unpacking. Do not apply pressure to the LED's, do not open any factory sealed compartments, and do not touch the LEDs with your hands.	**VONN highly recommends to use a qualified, licensed electrician to install the fixture.**
VONN recommends to install the fixture on its own independent circuit. Dd not install the fixture on the same circuit with the other appliances, or HVAC systems.	**Do not remove or replace VONN manufactured parts that is provided with the fixture.**
Place the wall switch in the "OFF" position of the room you are installing the fixture.	**Shut "OFF" the electricity at main fuse box.**

ENABLED EnabLED Licensing Program for LED Luminaires and Retrofit Bulbs Member Vonn LLC

Intertek

www.vonn.com

© VONN Lighting, 2024

Instructions

1 Wiring diagram

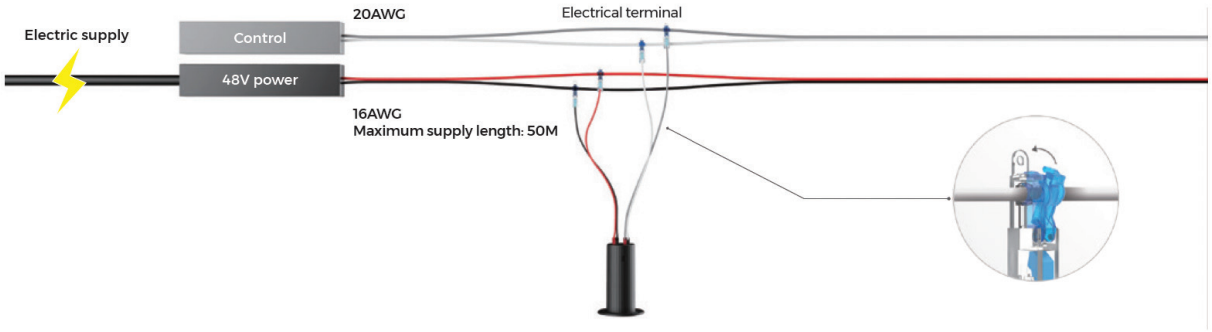

ON/OFF wiring diagram

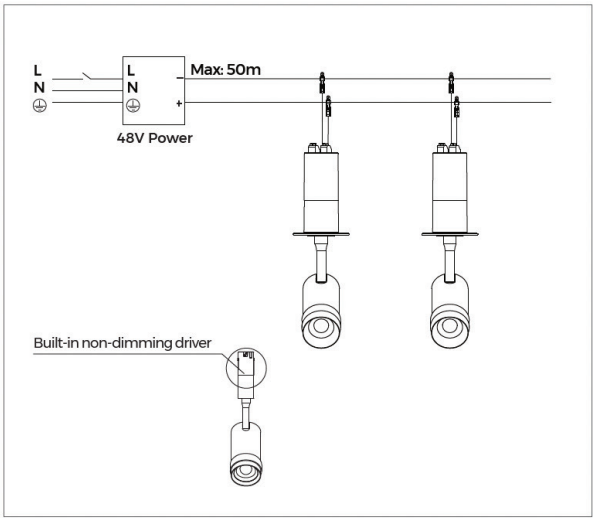

DALI wiring diagram

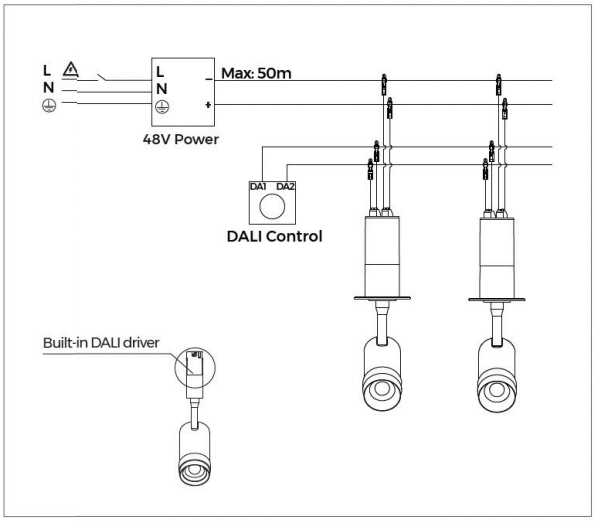

Tuya Bluetooth wiring diagram

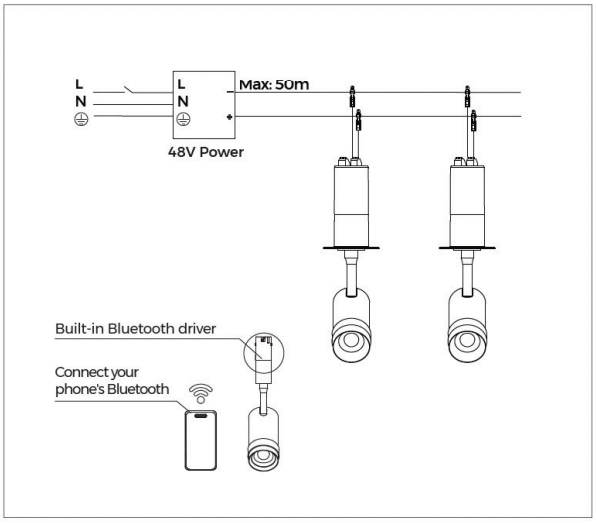

CASAMBI wiring diagram

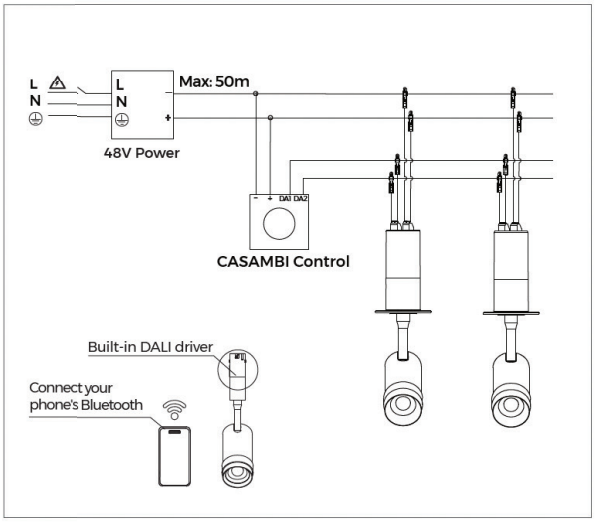

© VONN Lighting,2024

Instructions

2 Base installation

Trim-less recessed installation

1

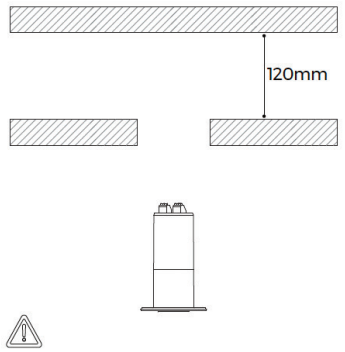

Provide minimum 120 mm of free space behind the ceiling

2

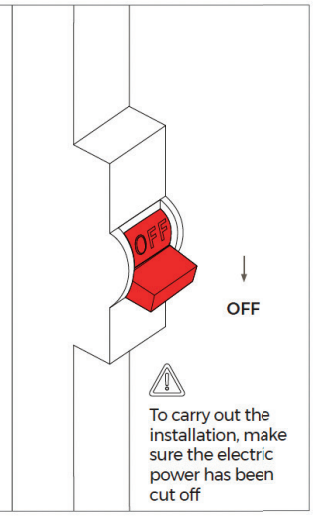

To carry out the installation, make sure the electric power has been cut off

3

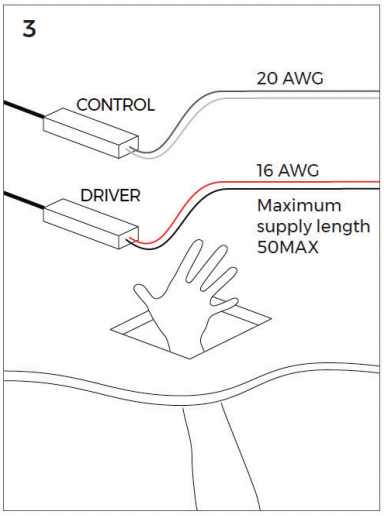

4

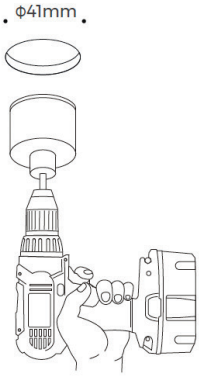

5

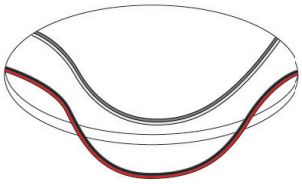

6

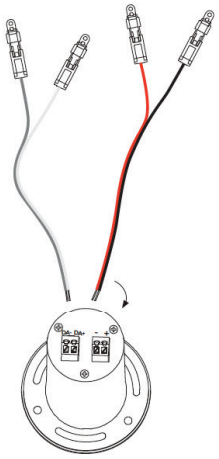

7

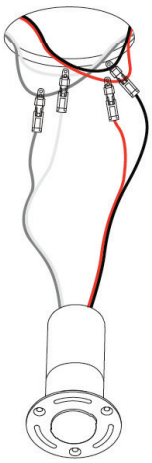

8

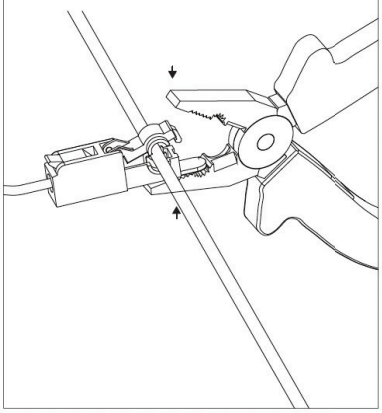

9

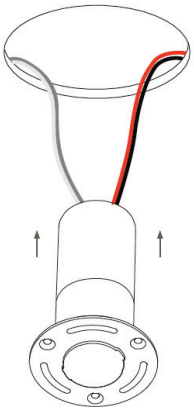

© VONN Lighting, 2024

Instructions

2 Base installation

10

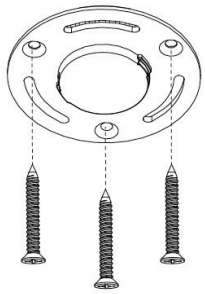

11

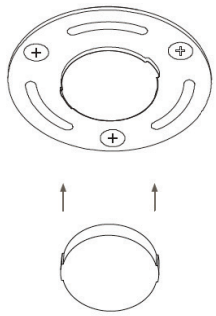

12

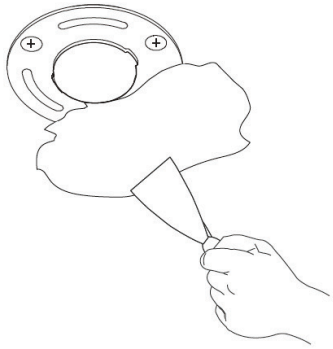

13

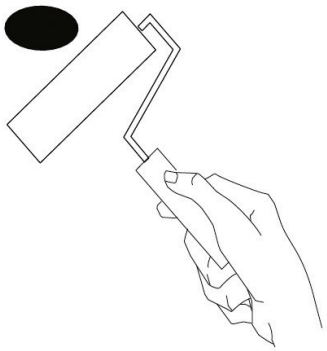

14

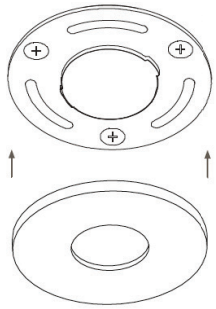

Repeat steps
1-10 as for recessed installation and install the cover

15

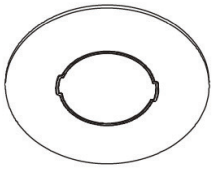

Note:
1. Max. loaded power of a base ≤ 150W
2. Loaded weight of base ≤ 10kg
3. Max. power cable (16AWG main cable) of base ≤ 50M
4. Total power of modules during work < 80%~85% output power of supply

© VONN Lighting, 2024

Instructions

3 Lighting installation

Recessed Spotlight installation

1

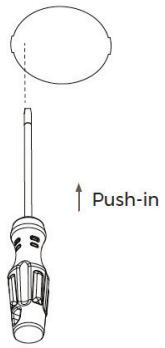

2

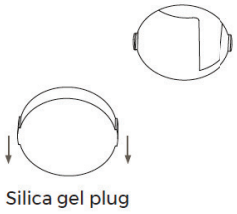

3

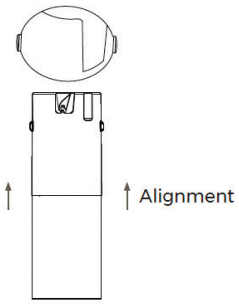

4

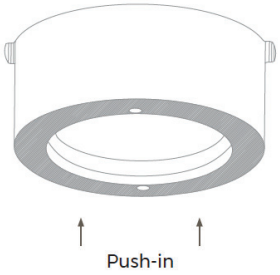

5

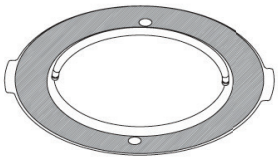

© VONN Lighting, 2024

Instructions

3 Lighting installation

Recessed Spotlight disassembly

1

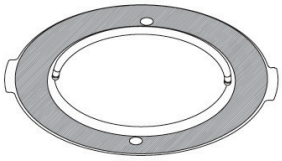

2

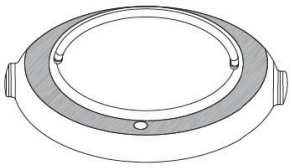

3

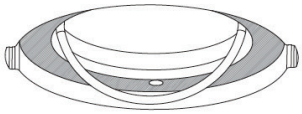

4

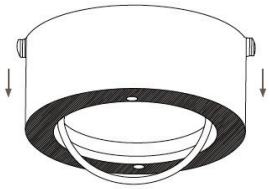

5

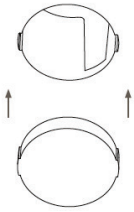

6

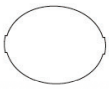

© VONN Lighting, 2024

Instructions

3 Lighting installation

Spotlight installation

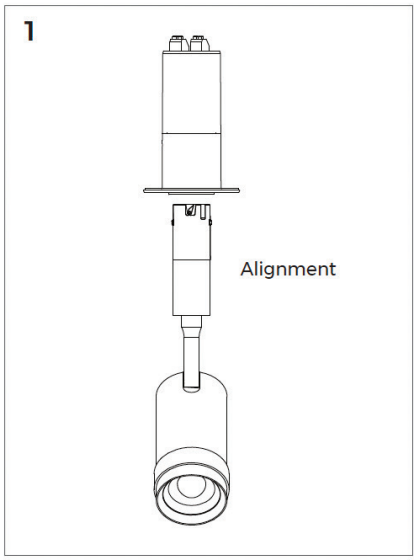

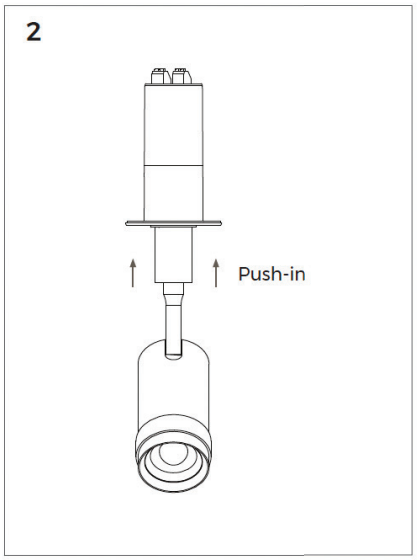

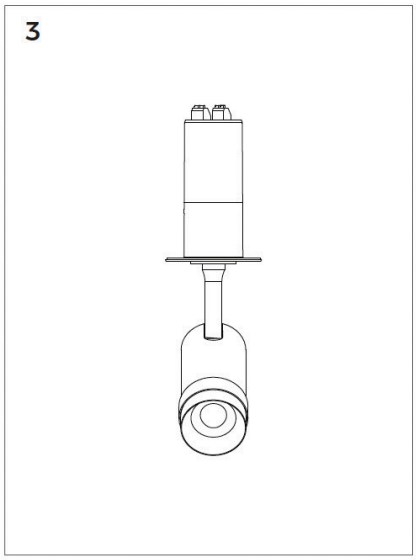

Spotlight disassembly

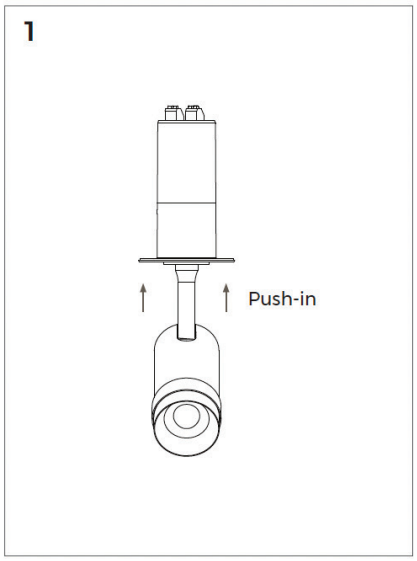

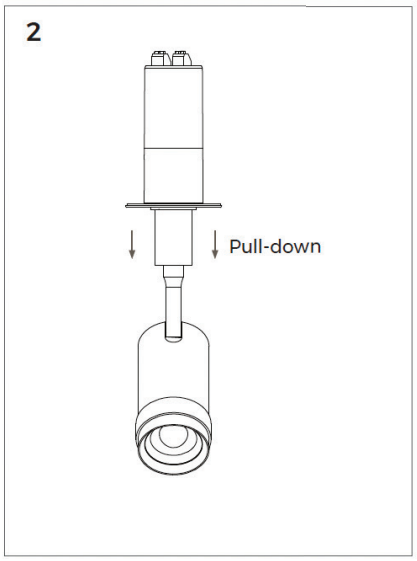

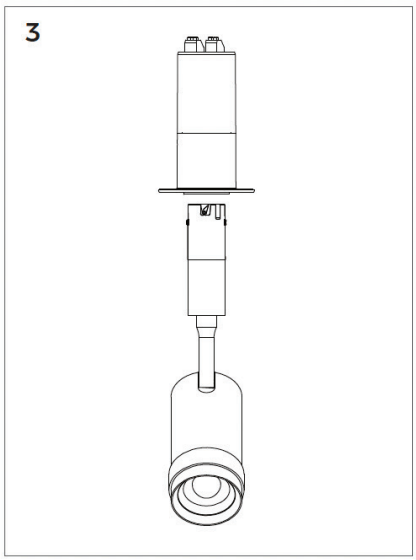

© VONN Lighting, 2024

Instructions

3 Lighting installation

Pendant lights installation

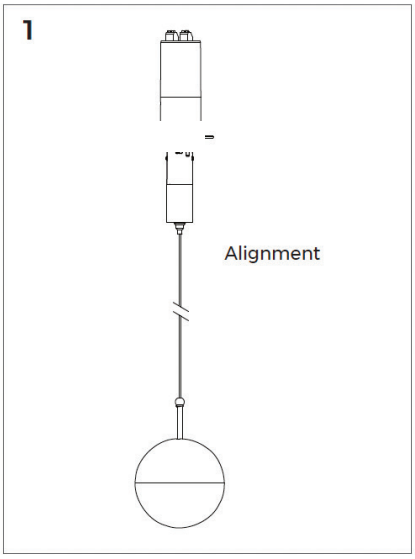

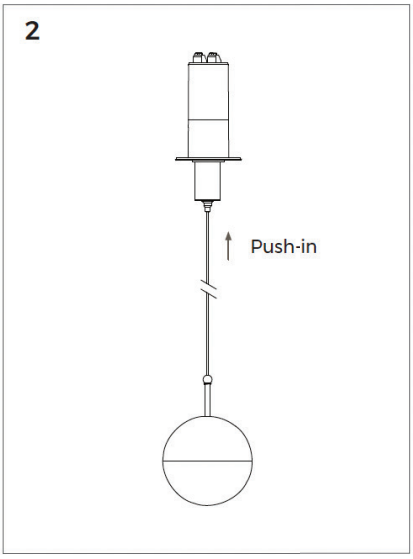

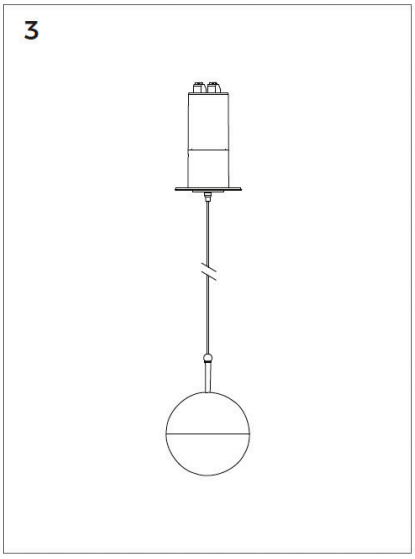

Pendant lights disassembly

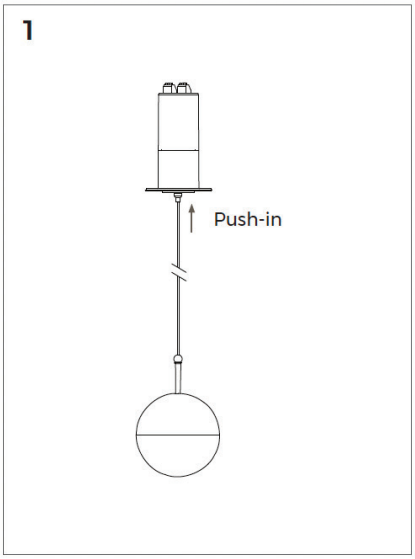

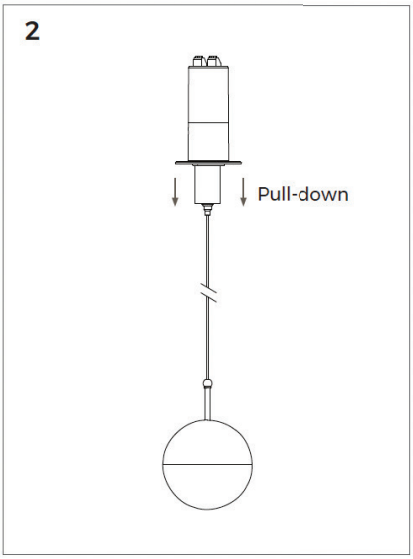

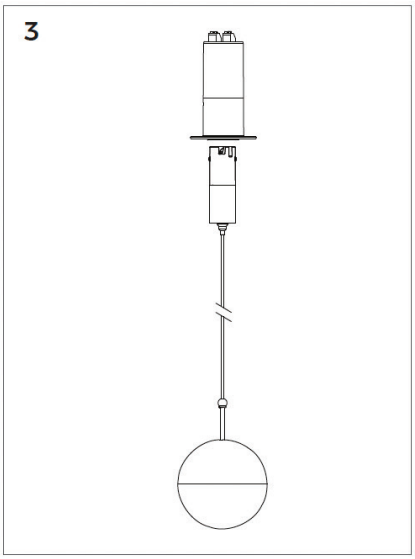

© VONN Lighting, 2024

Instructions

3 Lighting installation

Linear ceiling installation

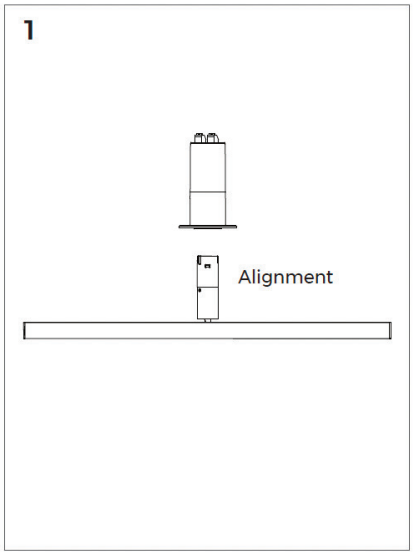

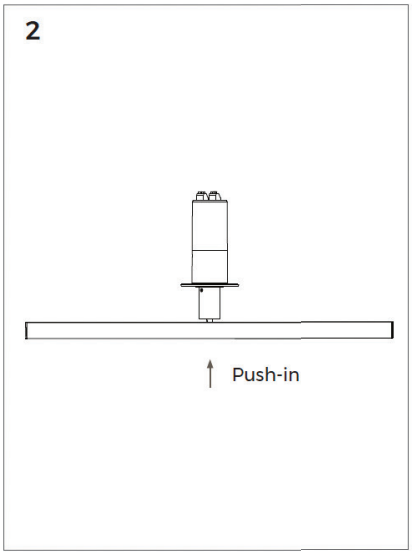

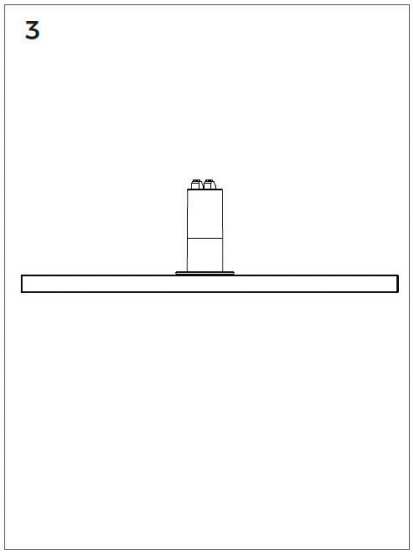

Linear ceiling disassembly

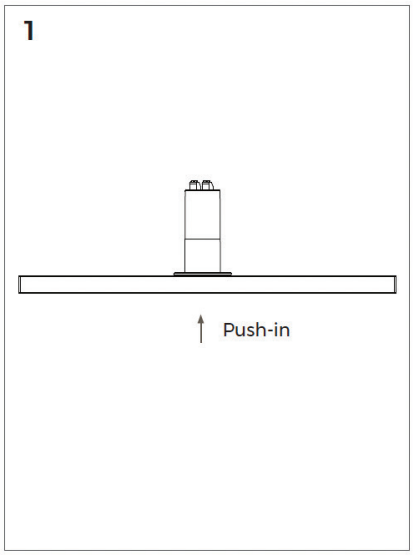

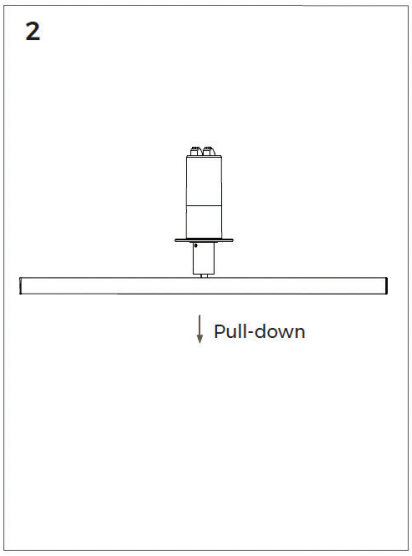

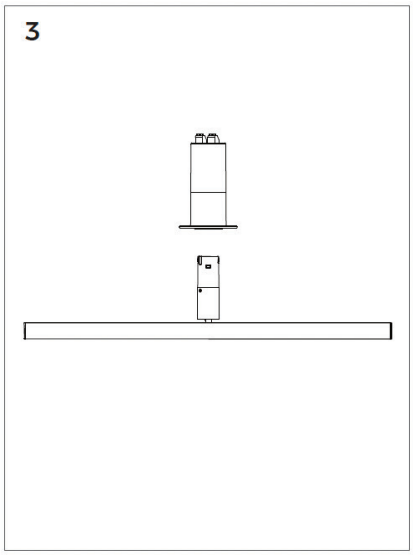

© VONN Lighting, 2024

Instructions

3 Lighting installation

Linear Pendant installation

1

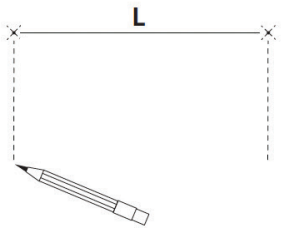

2

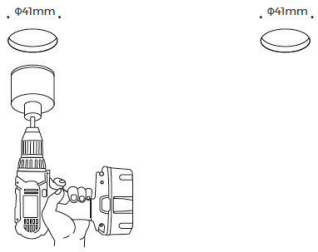

3

Repeat steps 5-13 for base installation

4

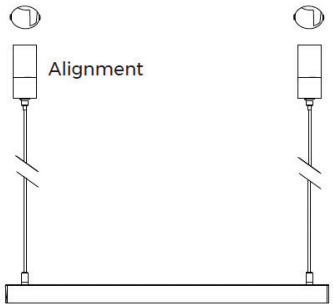

5

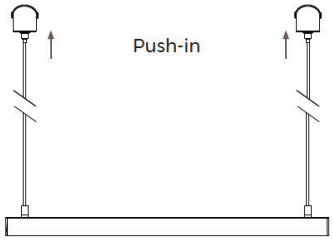

6

© VONN Lighting, 2024