INSTALLATION GUIDE:

VEGA ZOOMABLE

COMMERCIAL TRACK MOUNTED LED LIGHT SYSTEM

TOOLS YOU MAY NEED

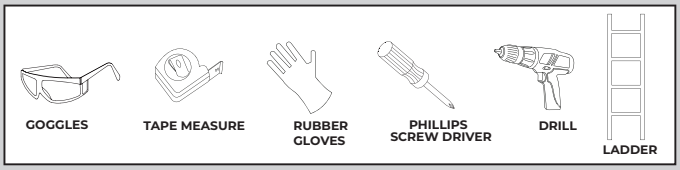

FOR YOUR SAFETY, READ AND UNDERSTAND FOLLOW INSTRUCTIONS!
KEEP THE INSTRUCTIONS IN SAFE PLACE FOR FUTURE REFERENCE!

CIRCUIT BOX

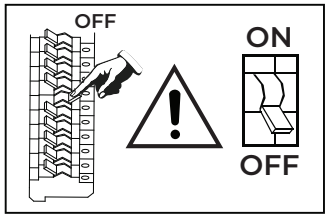

LED INFO & WARNINGS

Please read and understand the entire manual before attempting to assemble, operate, or install the product.	**Make sure that you have all necessary parts by checking the parts list. If any part is missing or damaged please contact VONN LIGHTING CUSTOMER SERVICE at 888-604-8666 for a replacement.**
All parts must be used as indicated in these instructions. Do not substitute any parts, leave parts out, or use any parts that are worn or broken.	**Inspect the LED fixture prior to installation to make sure that it has not been damaged during shipping.**
Please handle the LED light with care when unpacking. Do not apply pressure to the LED's, do not open any factory sealed compartments, and do not touch the LEDs with your hands.	**VONN highly recommends to use a qualified, licensed electrician to install the fixture.**
VONN recommends to install the fixture on its own independent circuit. Dd not install the fixture on the same circuit with the other appliances, or HVAC systems.	**Do not remove or replace VONN manufactured parts that is provided with the fixture.**
Place the wall switch in the "OFF" position of the room you are installing the fixture.	**Shut "OFF" the electricity at main fuse box.**

© VONN Lighting, 2023

Instructions

VONN

Vega-Zoomable

COMMERCIAL TRACK MOUNTED LED LIGHT SYSTEM

CAUTION

- ✓ Never connect components under load.
- ✓ Do not mount or support these fixtures in a manner that can cut the outer jacket or damage wire insulation.
- ✓ Controls for dimming, auto-sensing, or remote control of a luminaire that are not factory-wired to the luminaire must be checked for compatibility with the luminaire prior to installation. LED fixtures must be powered directly off a switched circuit.
- ✓ Unless individual product specifications deem otherwise: Do not restrict fixture ventilation. Allow for some volume of airspace around fixture. Avoid covering LED fixtures with insulation, foam, or other material that will prevent convection or conduction cooling.
- ✓ Unless individual product specifications deem otherwise: Do not exceed fixtures maximum ambient temperature.
- ✓ Only use fixture in its intended location.
- ✓ LED products are Polarity Sensitive. Ensure proper Polarity before installation.
- ✓ Do not touch individual electrical components as this can cause ESD, shorten lamp life, or alter performance.
- ✓ Always read the fixtures complete installation instructions prior to installation for any additional fixture specific warnings.
- ✓ Verify that power distribution system has proper grounding. Lack of proper earth ground can lead to fixture failure and may void warranty.
- ✓ Wear gloves and safety glasses at all times when removing luminaire from carton, installing, servicing or performing maintenance.
- ✓ The ceiling/track/frame must can hold the weight of the luminaire.
- ✓ Avoid direct eye exposure to the light source while it is on.
- ✓ Keep combustible and other materials that can burn, away from lamp/lens.
- ✓ Do not operate in close proximity to persons, combustible materials or substances affected by heat or drying.

⚠ WARNING

- ✓ Install this kit only in luminaires that have the construction features and dimensions shown in the photographs and/or drawings and where the input rating of the retrofit kit does not exceed the input rating of the luminaire.
- ✓ Wire connection must meet local electrical/building codes. Confirm that wires are in good condition and connectors are tight. A qualified electrician is required to install/remove the luminaire.
- ✓ Do not make or alter any open holes in an enclosure of wiring or electrical components during kit installation.
- ✓ To prevent wiring damage or abrasion, do not expose wiring to edges of sheet metal or other sharp objects.
- ✓ Allow lamp/fixture to cool before handling. Do not touch enclosure or light source.
- ✓ Do not directly look at the lamp when it is working.
- ✓ Do not exceed maximum wattage marked on luminaire label.
- ✓ Do not modify the mechanical or electrical of the luminaire.
- ✓ Do not use or store in corrosive environment with hazardous material e.g. Sulphur, Chlorine, Phthalates, etc.
- ✓ Using the original accessories. Or will void warranty.
- ✓ Follow all manufacturer's warnings, recommendations, and restrictions for: driver type, burning position, mounting locations/methods, replacement and recycling. Follow local disposal laws.

© VONN Lighting,2023

Instructions

Vega-Zoomable

COMMERCIAL TRACK MOUNTED LED LIGHT SYSTEM

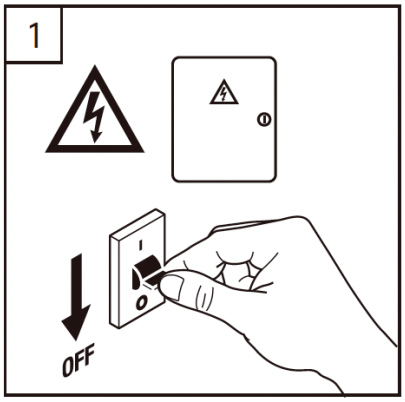

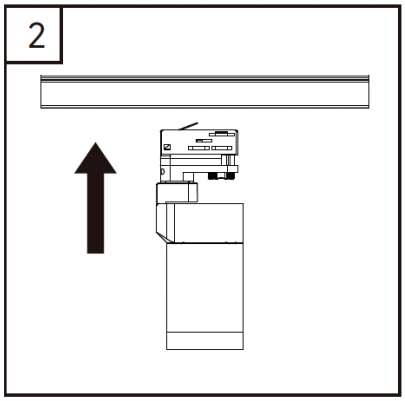

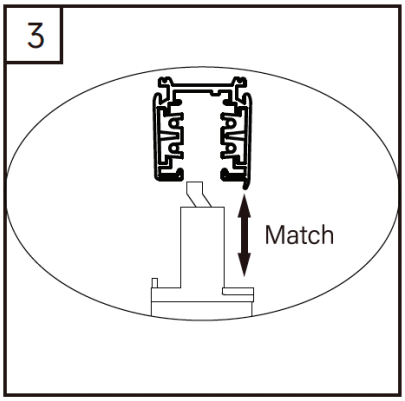

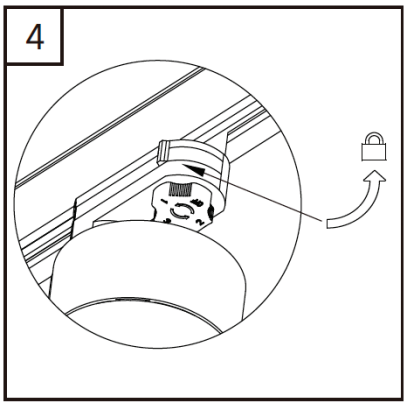

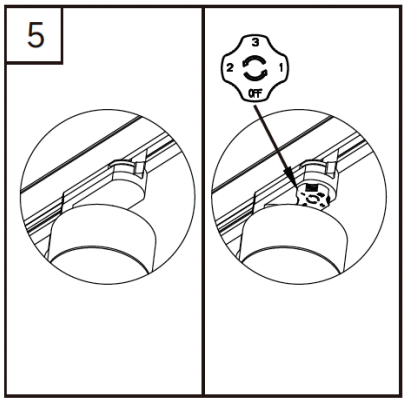

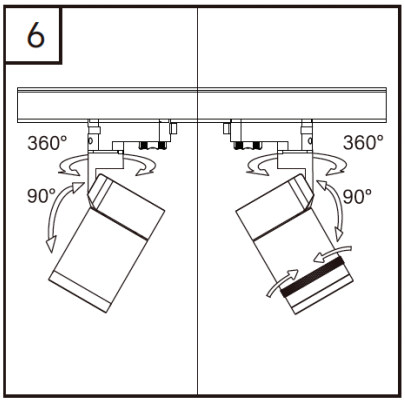

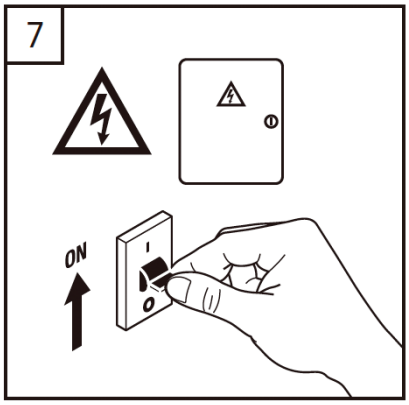

© VONN Lighting, 2023