REV.	REMARK	DATE	SIGN.

RoHS

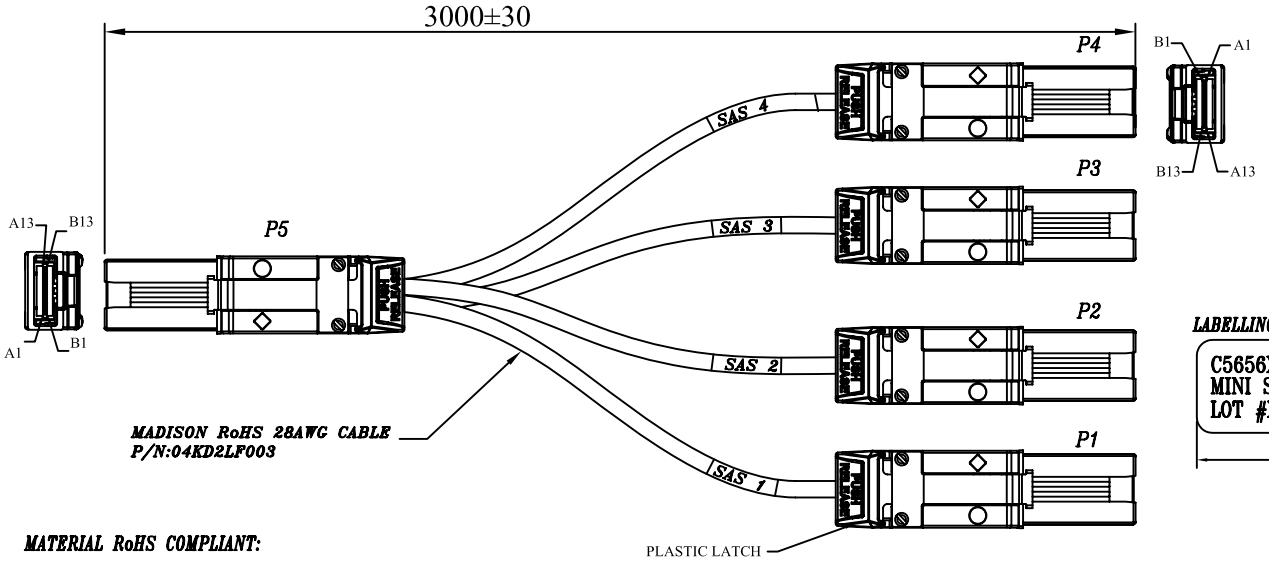

LABELLING ON BAG:

C5656X4-3M
MINI SAS CABLE
LOT #XXX

30

60

MATERIAL RoHS COMPLIANT:

CABLE:
CONDUCTOR: 2 TWISTED PAIRS, 28AWG SOLID SILVER PLATED COPPER.
INSULATION: FOAM POLYOLEFIN.
PAIR: 2 SINGLES LAID FLAT AND PARALLEL.
PAIR DRAIN WIRE: 30AWG SOLID SILVER PLATED COPPER.
PAIR SHIELD: ALUMINUM/POLYESTER TAPE. ALUMINUM SIDE FACING IN, 25% OVERLAP.
INNER SHIELD: ALUMINUM/POLYESTER TAPE, ALUMINUM SIDE PACING OUT, 25% OVERLAP.
OUTER SHIELD: 38AWG TIN PLATED COPPER BRAID, 85% COVERAGE.
DIAMETER: ϕ4.7mm NOMINAL. COLOR: BLACK.
PRINT LEGEND: "MADISON CABLE CORP.TYPE CL2 75°C 28AWG (UL) TurboTwin™"
DIFFERENTIAL IMPEDANCE: 100±5 OHMS @TDR
UL LISTING: TYPE CL2 AS SPECIFIED IN ARTICLE 725 OF THE NATIONAL ELECTRICAL CODE. TURBO TWIN™

CONNECTOR:
P1~P5:Mini SAS 4X CABLE PLUG - 26CKT CONNECTOR(SFF-8088)
(1) P.C.B: FR4, 4 LAYERS
(2) LATCH: STAINLESS STEEL
(3) BACKSHELL- ZINC DIE CASTING HOOD/ NICKEL PLATING
(4) WITH EXTERNAL UNIVERSAL KEY

DataStorageCables.com	DESC.	Mini SAS 4X/MiniSAS 4Xx4 Cable Ass'y		APPROVED	CHECKED	DESIGNED	TOLERANCE	SCALE	1 = 1	UNIT	mm
	P/N	C5656X4-3M	CUSTOMER P/N			SHIU		DATE	05/30/08	DWG NO:	DWG/RC/2833

REV.	REMARK	DATE	SIGN.

WIRING DIAGRAM

Mini SAS 4x			Mini SAS 4x		
plug	PIN	SIGNAL	plug	PIN	SIGNAL
P5	A2	RX0+	P1	B2	TX0+
	A3	RX0−		B3	TX0−
	B3	TX0−		A3	RX0−
	B2	TX0+		A2	RX0+
	A5	RX1+	P2	B2	TX0+
	A6	RX1−		B3	TX0−
	B6	TX1−		A3	RX0−
	B5	TX1+		A2	RX0+
	A8	RX2+	P3	B2	TX0+
	A9	RX2−		B3	TX0−
	B9	TX2−		A3	RX0−
	B8	TX2+		A2	RX0+
	A11	RX3+	P4	B2	TX0+
	A12	RX3−		B3	TX0−
	B12	TX3−		A3	RX0−
	B11	TX3+		A2	RX0+
GND GROUP			GND GROUP(P1,P2,P3,P4)		
A1,A4,A7,A10,A13 B1,B4,B7,B10,B13			A1,A4,A7,A10,A13 B1,B4,B7,B10,B13		
SHELL			SHELL (P1,P2,P3,P4)		

DataStorageCables.com	DESC.	Mini SAS 4X (x5) Cable Assembly		APPROVED	CHECKED	DESIGNED	TOLERANCE	SCALE	1 = 1	UNIT	mm
	P/N	C5656X4-3M	CUSTOMER P/N			SHIU		DATE	05/30/08	DWG NO:	DWG/BRC/2833