REV.	REMARK	DATE	SIGN.

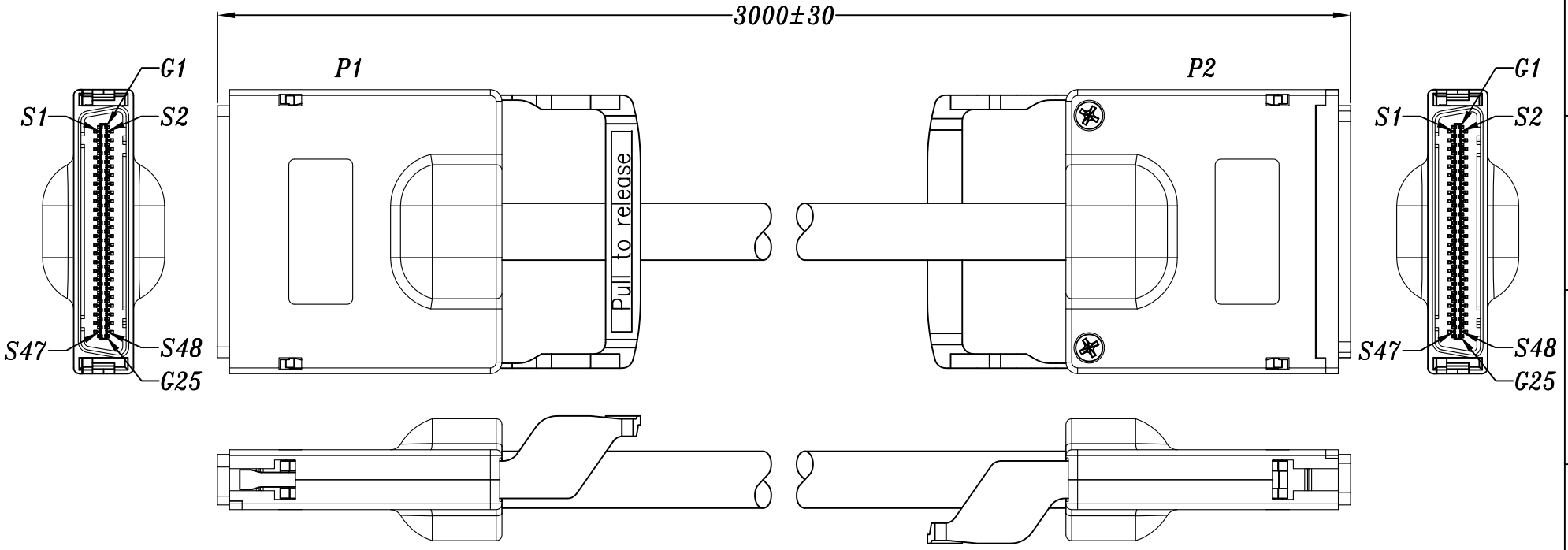

1.PAIR COMPONENT: (AMPHENOL 28AWG)
CONDUCTOR: 30AWG SOLID SILVER PLATED.
DRAIN WIRE: 30AWG SOLID TINNED COPPER.
PAIR SHIELD: ALUMINUM/POLYESTER TAPE. ALUMINUM SIDE FACING IN, 20% OVERLAP

2.FINAL ASSEMBLY:
CORE: 24 PAIRS (#1-24) CABLED TOGETHER.
INNER SHIELD: ALUMINUM/POLYESTER TAPE, ALUMINUM SIDE PACING OUT, 20% OVERLAP.
OUTER SHIELD: 36AWG TIN PLATED COPPER BRAID, 85% COVERAGE.
DIAMETER: 9.8mm NOMINAL, COLOR: BLACK
DIFFERENTIAL IMPEDANCE: 100±5 ohms @TDR
MUTUAL CAPACITANCE: 43pF/M NOMINAL.
TIME DELAY: 4.35ns/M.

3.CONNECTOR & HOOD:
P1 & P2 :12X EJECTOR TYPE CONNECTOR:
(1)HOUSING- ZINC DIE CAST
(2)CONTACTS- 30u" INCHES GOLD PLATING

4.For DDR use

DataStorageCables.com	DESC.	12X/12X CABLE, EJECTORS		APPROVED	CHECKED	DESIGNED	TOLERANCE	SCALE	1 = 1	UNIT	mm
	P/N	C6262-3ME-DDR	CUSTOMER P/N					DATE	05/10/'07	DWG NO:	DWG\B\1534