Inductive sensor
NI35-CP40-FZ3X2

Industrial Automation

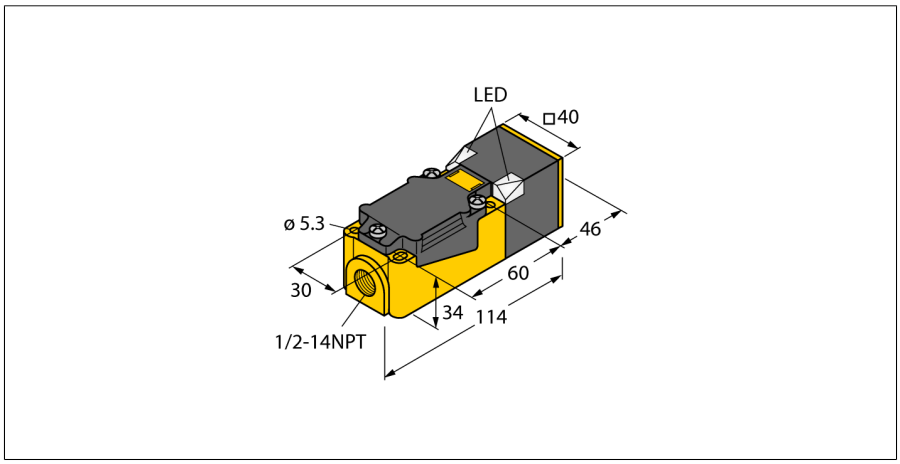

- **Rectangular, height 40 mm**
- **Variable orientation of active face in 9 directions**
- **Plastic, PBT-GF30-V0**
- **High luminance corner LEDs**
- **Optimum view on supply voltage and switching state from any position**
- **AC 2-wire, 20…250 VDC**
- **DC 2-wire, 10…300 VDC**
- **NC/NO programmable**
- **Terminal chamber**

Type code	NI35-CP40-FZ3X2
Ident-No.	13413
Ident-No (TUSA)	M1341300
Rated switching distance Sn	35 mm
Mounting conditions	non-flush
Assured switching distance	≤ (0,81 x Sn) mm
Correction factors	St37 = 1; Al = 0.3; stainless steel = 0.7; Ms = 0.4
Repeatability	≤ 2 % of full scale
Temperature drift	≤ ± 10 %
Hysteresis	3…15 %
Ambient temperature	-25…+70 °C
Operating voltage	20…250 VAC
Operating voltage	10… 300VDC
AC rated operational current	≤ 400 mA
DC rated operational current	≤ 300 mA
Frequency	≥ 50…≤ 60 Hz
Residual current	≤ 1.7 mA
Rated insulation voltage	≤ 1.5 kV
Surge current	≤ 8 A (≤ 10 ms max. 5 Hz)
Voltage drop at I_e	≤ 6 V
Output function	2-wire, connection programmable
Smallest operating current I_m	≥ 3 mA
Switching frequency	0.02 kHz
Construction	Rectangular, CP40
Dimensions	114 x 40 x 40 mm
Housing material	Plastic, PBT-GF30-V0, black
Connection	terminal chamber
Clamping ability	≤ 2.5 mm²
Vibration resistance	55 Hz (1 mm)
Shock resistance	30 g (11 ms)
Protection class	IP67
MTTF	2283 years acc. to SN 29500 (Ed. 99) 40 °C
Power-on indication	2 LEDs green
Switching state	LED red

Wiring Diagram

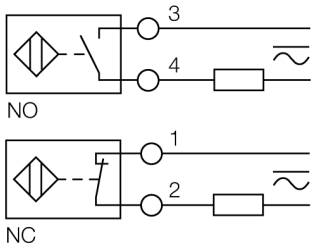

Functional principle

Inductive sensors detect metal objects contactless and wear-free. For this, they use a high-frequency electromagnetic AC field that interacts with the target. Inductive sensors generate this field via an RLC circuit with a ferrite coil.

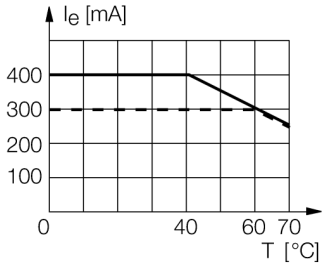

Edition • Rev. D • 2016-06-10T19:54:59+02:00

Distance D	4.5 x B
Distance W	3 x Sn
Distance S	1.5 x B
Distance G	6 x Sn
Distance N	1 x B

Width of the active face B	40 mm

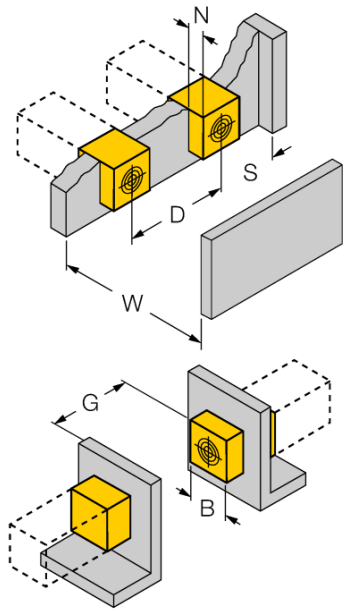

Edition • Rev. D • 2016-06-10T19:54:59+02:00