## WIRING DIAGRAM

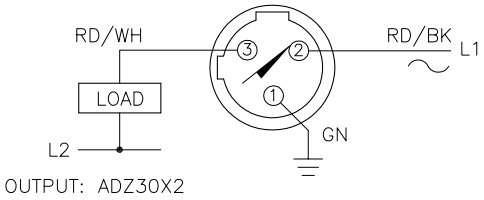


OUTPUT: ADZ30X2

SHORT-CIRCUIT AND OVERLOAD PROTECTED

## LOCKNUT LN-M30

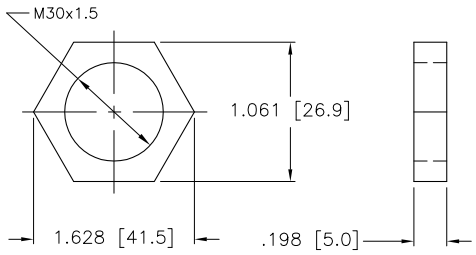


## SPECIFICATIONS

| | |
|---|---|
| RATED OPERATING DISTANCE | 20mm = .787" |
| MOUNTING MODE | NON-FLUSH |
| TEMPERATURE DRIFT | ≤±10% |
| HYSTERESIS | 3-15% |
| MIN. REPEAT ACCURACY | ≤2% |
| OPERATING TEMPERATURE | -25°C to +70°C (-13°F to +158°F) |
| RATED OPERATIONAL VOLTAGE (AC/DC) | 20-250 VAC/10-300 VDC |
| MAX. RIPPLE | ≤10% |
| RATED OPERATIONAL CURRENT (AC/DC) | ≤400 mA AC/≤300 mA DC |
| FREQUENCY | 50-60 Hz |
| RESIDUAL CURRENT | ≤1.7 mA |
| RATED INSULATION VOLTAGE | ≤1.5 kV |
| SURGE CURRENT | ≤3.0 A (≤20 ms MAX. 5 Hz) |
| SHORT-CIRCUIT PROTECTION | YES, LATCHING |
| MAX. VOLTAGE DROP | ≤6.0 V |
| WIRE BREAKAGE PROTECTION | INCORPORATED |
| REVERSE POLARITY PROTECTION | INCORPORATED |
| MAX. SWITCHING FREQUENCY | ≤0.02 kHz |
| SMALLEST OPERATING CURRENT | ≥3.0 mA |
| OUTPUT FUNCTION | 3-WIRE, NORMALLY OPEN |
| HOUSING MATERIAL | BRASS, CHROME-PLATED |
| ACTIVE FACE MATERIAL | PLASTIC, PBT |
| CONNECTION | 1/2-20UNF CONNECTOR |
| VIBRATION RESISTANCE | 55 Hz (IN ALL 3 PLANES) |
| SHOCK RESISTANCE | 30 g, 11 ms |
| DEGREE OF PROTECTION | IP67 |
| SWITCHING STATUS INDICATION | LED, RED |
| OPERATING VOLTAGE INDICATION | LED, GREEN |

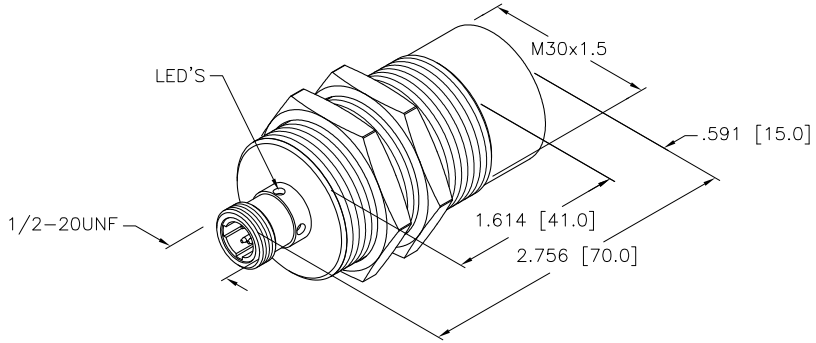


**SOURCE DRAWING - FOR REFERENCE ONLY**

| REV | DESCRIPTION | BY | DATE | ECO NO. |
|---|---|---|---|---|
| B | UPDATE BARREL, SEE ECO | RDS | 04/28/11 | 34350 |

RELATED DOCUMENTS
1.
2.
3.
4.

3RD ANGLE PROJECTION

THIS DRAWING IS PROPERTY OF TURCK INC. USE OF THIS DOCUMENT WITHOUT WRITTEN PERMISSION IS PROHIBITED.

TURCK INC
High Technology Sensors and Automation Controls

3000 CAMPUS DRIVE
MINNEAPOLIS, MN 55441
1-800-544-7769
(763) 553-7300
(763) 553-0708 fax
turck.com

MATERIAL

FINISH

ALL DIMENSIONS DISPLAYED ON THIS DRAWING ARE FOR REFERENCE ONLY

CONTACT TURCK FOR MORE INFORMATION

DRFT CBM
DATE 11/08/00
DSGN
SCALE 1=1.5

UNIT OF MEASUREMENT
**INCH [ MILLIMETER ]**
DO NOT SCALE THIS DRAWING

DESCRIPTION
NI20-G30-ADZ30X2-B3131

IDENTIFICATION NO. T4205406
REV B

FILE: T4205406
SHEET 1 OF 1