Kollmorgen AKM™ Servomotor Selection Guide

with AKD™ Servo Drive Systems

KOLLMORGEN®

Because Motion Matters™

Kollmorgen.
Every solution comes from a real understanding of the challenges facing machine designers and users.

The ever-escalating demands of the marketplace mean increased pressure on machine designers and users at every turn. Time constraints. Demands for better performance. Having to think about the next-generation machine even before the current one is built. While expectations are enormous, budgets are not. Kollmorgen's innovative motion solutions and broad range of quality products help engineers not only overcome these challenges but also build truly differentiated machines.

Because motion matters, it's our focus. Motion can distinctly differentiate a machine and deliver a marketplace advantage by improving its performance. This translates to overall increased efficiency on the factory floor. Perfectly deployed machine motion can make your customer's machine more reliable and efficient, enhance accuracy and improve operator safety. Motion also represents endless possibilities for innovation. We've always understood this potential, and thus have kept motion at our core, relentlessly developing products that offer precision control of speed, accuracy and position in machines that rely on complex motion.

KOLLMORGEN®

Because Motion Matters™

Removing the Barriers of Design, Sourcing, and Time

At Kollmorgen, we know that OEM engineers can achieve a lot more when obstacles aren't in the way. So, we knock them down in three important ways:

Integrating Standard and Custom Products

The optimal solution is often not clear-cut. Our application expertise allows us to modify standard products or develop totally custom solutions across our whole product portfolio so that designs can take flight.

Providing Motion Solutions, Not Just Components

As companies reduce their supplier base and have less engineering manpower, they need a total system supplier with a wide range of integrated solutions. Kollmorgen is in full response mode with complete solutions that combine programming software, engineering services and best-in-class motion components.

Global Footprint

With direct sales, engineering support, manufacturing facilities, and distributors spanning the Americas, Europe, Middle East, and Asia, we're close to OEMs worldwide. Our proximity helps speed delivery and lend support where and when they're needed.

Financial and Operational Stability

Kollmorgen is part of Danaher Corporation. A key driver in the growth of all Danaher divisions is the Danaher Business System, which relies on the principle of "kaizen" – or continuous improvement. Using world-class tools, cross-disciplinary teams of exceptional people evaluate processes and develop plans that result in superior performance.

Table of Contents

- **AKM™ Servomotor** 4
- **AKD™ Servo Drive** 8
- **AKM™ World of Options** 12
- **AKM™ Washdown and Washdown Food Grade** 13
- **AKM™ System Overview** 14
- **AKM™ Drawings and Performance Data**
  - AKM1x 20
  - AKM2x 24
  - AKM3x 28
  - AKM4x 32
  - AKM5x 38
  - AKM6x 44
  - AKM7x 48
  - AKM8x 52
- **L10 Bearing Fatigue Life and Shaft Loading** 57
- **Feedback Options** 60
- **Brake Option** 64
- **Servomotor Connector Options** 65
- **Model Nomenclature** 71
- **MOTIONEERING® Application Engine** 75

AKM™ Servomotor

Kollmorgen's AKM family of servomotors gives you unprecedented choice and flexibility from a wide range of standard products so you can select the best servomotor for your application. By pairing AKM servomotors with our family of plug-and-play AKD™ servo drives, selecting the right motion control products has never been easier. Pick from thousands of servomotor/servo drive combinations outlined in this selection guide or go to our website to find the best solution for your application.

Standard AKM servomotors and servo drives offer the best of both worlds – the exact specifications of a custom solution with the faster delivery times and lower cost of a standard catalog product. For your truly unique motion control applications, work with our engineering team to customize a solution for your machine design. Either way, standard product or customized, we can help you choose the motion control solution that meets your exact requirements.

The Benefits of AKM Servomotor

• Best-in-Class Performance	• Industry-leading motor power density • Same size AKM/AKD system delivers up to 47% more shaft power than before • Compensation for stiff and compliant transmissions and couplings • Exceptionally low cogging
• Flexibility to Find an Exact-fit Solution in a Standard Product	• AKM offers 28 frame-stack combinations and 117 standard windings in a single motor line • Over 500,000 standard motor variations including a wide range of mounting, connectivity, feedback and other options • Simplifies or eliminates mechanical modifications and engineering adaptation • New Washdown and Food Grade options for AKM • New higher torque models up to 180 Nm of continuous torque
• Ease-of-Use and Faster Commissioning	• Plug-and-play motor recognition drive commissioning • Reduce cycle time and sensor-and-wiring costs by eliminating traditional homing methods • Reduction in set-up time for each servo system

AKM Servomotor Series

AKM Motors Offer Extremely High Torque Density and High Acceleration

The AKM high-performance motor series offers a wide range of mounting, connectivity, feedback and other options. These motors offer superb flexibility to meet application needs with:

- 8 frame sizes (40 to 260 mm)
- 28 frame-stack length combinations
- 117 'standard' windings

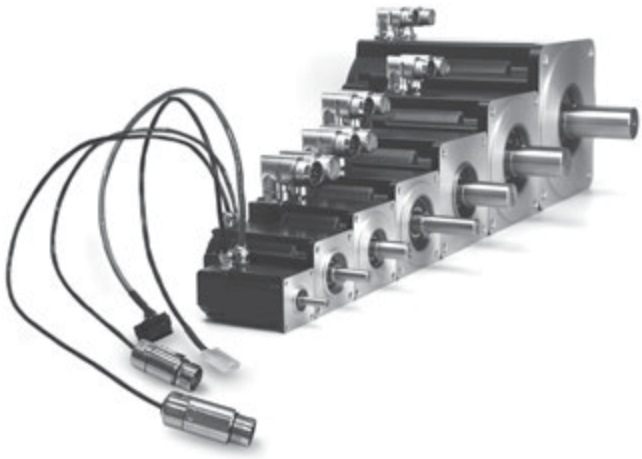

Features

Torque
0.16 to 180 Nm continuous stall torque (1.4 to 1590 lb-in) in 28 frame/stack combinations. Specific torques are often available from multiple frame sizes to optimize mounting and inertia matching capabilities.

Speed
Speeds to 8000 rpm meet high speed application requirements. Windings tailored to lower speeds are also available.

Voltage
AKM motors can be applied to all standard global voltages. Windings are specifically tailored to 75 Vdc, 120, 240, 400 and 480 Vac.

Mounting
Multiple mounting standards are available to meet common European, North American, and Japanese standards.

Feedback
AKM motors include resolver, encoder (commutating), Sine-Absolute encoder or SFD (Smart Feedback Device) feedback options to meet specific application requirements.

Smoothness
Smooth performance results from low-cog, low-harmonic distortion magnetic designs.

Connectivity
Rugged, rotatable IP65 connectors or low cost IP20 Molex plugs are both available to provide flexibility. Single connectors/plugs (combined power and feedback) are also available to minimize motor and cable cost (SFD only).

Thermal
Windings are rated conservatively at 100°C rise over a 40°C ambient while using 155°C (class F) insulation materials. Motors meet applicable cURus and CE requirements and include thermistors. Thermal ratings at 60°C rise are also provided to meet the needs of specific applications.

Kollmorgen Cables Offer the Complete Solution

The new Value Line cables provide a cost saving option for applications that don't require long distances or encounter extreme environmental conditions. Value Line is a composite cable that combines power and feedback in one cable to aid in faster machine commissioning. Contact Kollmorgen Customer Support to identify which cable option is best suited for your application.

Options

Additional options:

- Fail-safe brakes
- New, Teflon® shaft seals
- Feedback devices
- Shaft and mounting variations
- Custom windings
- Connectivity

3-D Model Shows Key Design Features

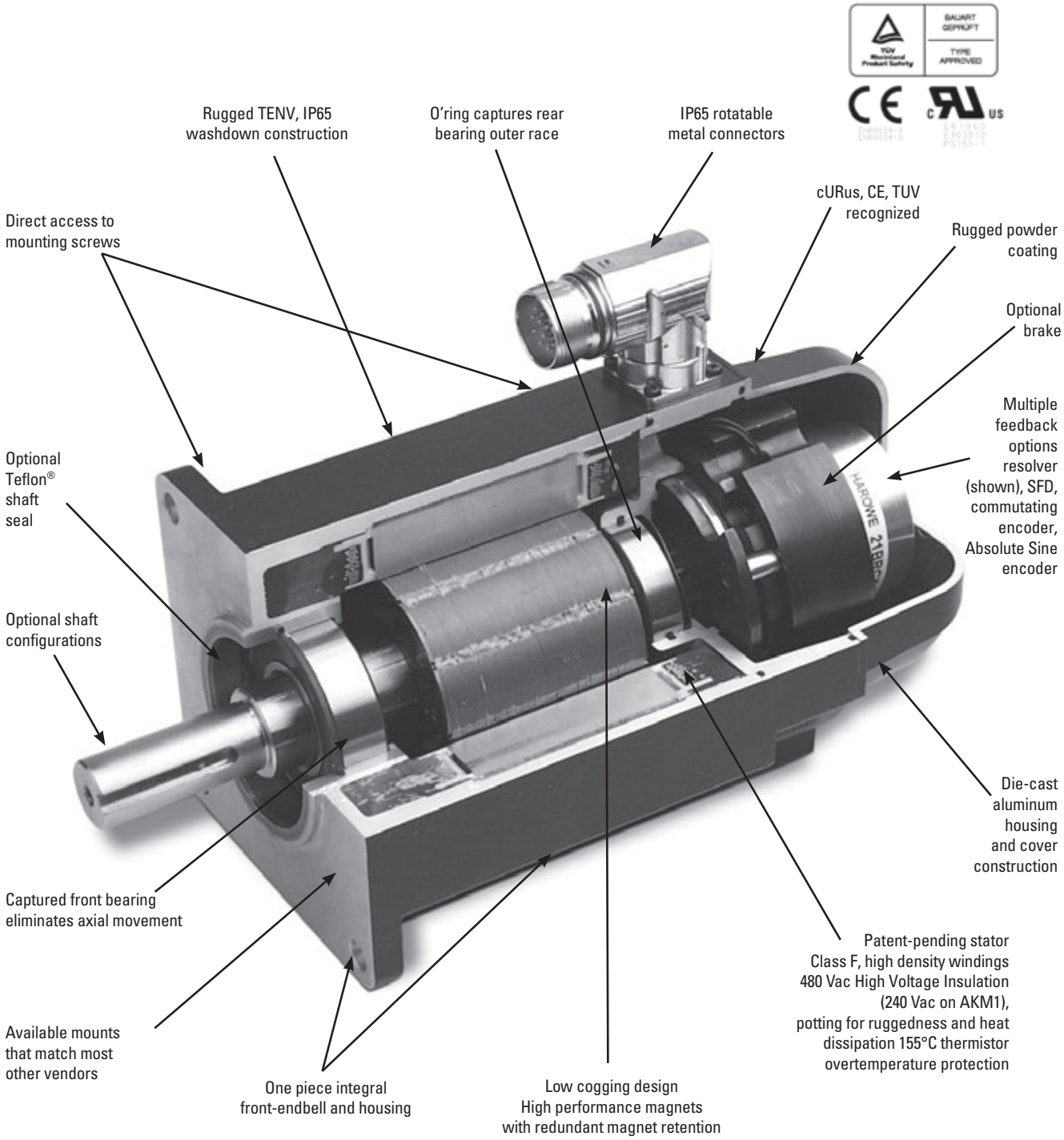

AKD™ Servo Drive

Our AKD series is a complete range of Ethernet-based servo drives that are fast, feature-rich, flexible and integrate quickly and easily into any application. AKD ensures plug-and-play commissioning for instant, seamless access to everything in your machine. And, no matter what your application demands, AKD offers industry-leading servo performance, communication options, and power levels, all in a smaller footprint.

This robust, technologically advanced family of drives delivers optimized performance when paired with our best-in-class components, producing higher quality results at greater speeds and more uptime. With Kollmorgen servo components, we can help you increase your machine's OEE by 50%.

The Benefits of AKD Servo Drive

• Optimized Performance in Seconds	• Auto-tuning is one of the best and fastest in the industry • Automatically adjusts all gains, including observers • Immediate and adaptive response to dynamic loads • Precise control of all motor types • Compensation for stiff and compliant transmission and couplings
• Greater Throughput and Accuracy	• Up to 27-bit-resolution feedback yields unmatched precision and excellent repeatability • Very fast settling times result from a powerful dual processor system that executes industry-leading and patent pending servo algorithms with high resolution • Advanced servo techniques such as high-order observer and bi-quad filters yield industry-leading machine performance • Highest bandwidth torque-and-velocity loops. Fastest digital current loop in the market
• Easy-to-use Graphical User Interface (GUI) for Faster Commissioning and Troubleshooting	• Six-channel real-time software oscilloscope commissions and diagnoses quickly • Multi-function Bode Plot allows users to quickly evaluate performance • Auto-complete of programmable commands saves looking up parameter names • One-click capture and sharing of program plots and parameter settings allow you to send machine performance data instantly • Widest range of programming options in the industry
• Flexible and Scalable to Meet any Application	• 3 to 24 Arms continuous current; 9 to 48 Arms peak • Very high power density enables an extremely small package • True plug-and-play with all standard Kollmorgen servomotors and actuators • Supports a variety of single and multi-turn feedback devices—Smart Feedback Device (SFD), EnDat2.2, 01, BiSS, analog Sine/Cos encoder, incremental encoder, HIPERFACE®, and resolver • Tightly integrated Ethernet motion buses without the need to add large hardware: EtherCAT®, SynqNet®, Modbus/TCP, EtherNet/IP, PROFINET, and CANopen® • Scalable programmability from base torque-and-velocity through multi-axis master

The AKD servo drive delivers cutting-edge technology and performance with one of the most compact footprints in the industry. These feature-rich drives provide a solution for nearly any application, from basic torque-and-velocity applications, to indexing, to multi-axis programmable motion with embedded Kollmorgen Automation Suite. The versatile AKD sets the standard for power density and performance.

Micron™ Gearheads

AKM™ Servomotors

Kollmorgen Cartridge DDR™ Motors

Housed Direct Drive Rotary Motors

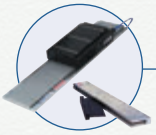

Direct Drive Linear Motors*

Linear Actuators

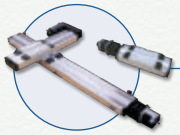

Multi-Axis Precision Tables

Best-in-Class Components

AKD works seamlessly with Kollmorgen motors and actuators–well-known for quality, reliability, and performance.

AKD™ Servo Drive

Industry-leading power density

Modbus/TCP

General Specifications

120 / 240 Vac 1 & 3 Phase (85 -265 V)	Continuous Current (Arms)	Peak Current (Arms)	Drive Continuous Output Power Capacity (Watts)	Internal Regen (Watts) (Ohms)		Height mm (in)	Width mm (in)	Depth mm (in)	Depth with Cable Bend Radius mm (in)
AKD-■00306	3	9	1100	0	0	168 (6.61)	57 (2.24)	153 (6.02)	184 (7.24)
AKD-■00606	6	18	2000	0	0	168 (6.61)	57 (2.24)	153 (6.02)	184 (7.24)
AKD-■01206	12	30	4000	100	15	195 (7.68)	76 (2.99)	186 (7.32)	215 (8.46)
AKD-■02406	24	48	8000	200	8	250 (9.84)	100 (3.94)	230 (9.06)	265 (10.43)

240/480 Vac 3 Phase (187-528 V)	Continuous Current (Arms)	Peak Current (Arms)	Drive Continuous Output Power Capacity (Watts)	Internal Regen (Watts) (Ohms)		Height mm (in)	Width mm (in)	Depth mm (in)	Depth with Cable Bend Radius mm (in)
AKD-■00307	3	9	2000	100	33	256 (10.08)	70 (2.76)	186 (7.32)	221 (8.70)
AKD-■00607	6	18	4000	100	33	256 (10.08)	70 (2.76)	186 (7.32)	221 (8.70)
AKD-■01207	12	30	8000	100	33	256 (10.08)	70 (2.76)	186 (7.32)	221 (8.70)
AKD-■02407	24	48	16,000	200	23	310 (12.20)	105 (4.13)	229 (9.02)	264 (10.39)
S748	48	96	35,000	–	–	385 (15.16)	190 (7.48)	244 (9.61)	285 (11.22)
S772	72	140	50,000	–	–	385 (15.16)	190 (7.48)	244 (9.61)	285 (11.22)

Note 1: For complete AKD and S700 model nomenclature, refer to pages 72 and 73.
Note 2: Additional AKD information can be found online.

AKM World of Options

This selection guide outlines the extensive options available within the family of advanced AKM servomotors. Our motors are complemented by a complete family of digital servo drives, offering you the best motion control solution in the marketplace.

Beyond the AKM series, Kollmorgen offers many other outstanding products, from direct drive rotary and linear products, to stepper and synchronous solutions. Even better, Kollmorgen can engineer the right solution for your needs. Ask our Customer Support Center today about a custom solution that fits your needs. Let the experts at Kollmorgen put a world of solutions at your fingertips.

AKM11x

The AKM1 frame size with "M" option connectivity and Smart Feedback Device (SFD).

AKM22x

The AKM2 frame size with "B" option connectivity, Commutating Encoder Feedback and optional brake.

The AKM3 frame size with "D" option connectivity and SFD Feedback.

AKM41x

The AKM4 frame size with "P" option connectivity and SFD Feedback.

AKM52x

The AKM5 frame size with "C" option connectivity and optional brake.

AKM63x

The AKM6 frame size with "C" option connectivity.

AKM74x

The AKM7 frame size with "C" option connectivity and optional brake.

AKM83x

The AKM8 frame size with "T" option connectivity.

AKM Washdown and Washdown Food Grade

These motor variants are used in applications that are subject to strict hygiene regulations in which it is essential that the formation of nuclei and corrosion are avoided and in which machines must be cleaned cyclically. These motors are based on the standard types AKM2 – AKM6 with special modifications for use in the food-processing industry, in the packaging industry, or even outdoors. An option for AKM Washdown and Washdown Food motors is to coat the flange.

AKM Washdown

Part Numbers:

AKMxxx-xxxxx-0W: Washdown with unpainted flange
AKMxxx-Wxxxx-0W: Washdown with painted flange

Note: The AKM Washdown motors must not come into contact with any unpacked food.

Application Area:	Harsh Environments, Outdoors
Application Examples:	Transport in the food and packaging area without contact with food, Radar stations, wind turbines, offshore installations
Standards:	UL, CE, RoHS
Surface:	Gray 2K paint
Immunity:	Against tested industrial cleaning agents*, corrosion-resistant
Degree of Protection:	IP67
Shaft:	303 Stainless steel (CSN417029)
Rotary Shaft Seal:	PTFE
Lubricant:	Industrial bearing grease, non-food-grade
Connector:	Stainless steel, smooth surface
Screws:	Stainless steel
Name Plate:	Engraved, additional name plate in the package

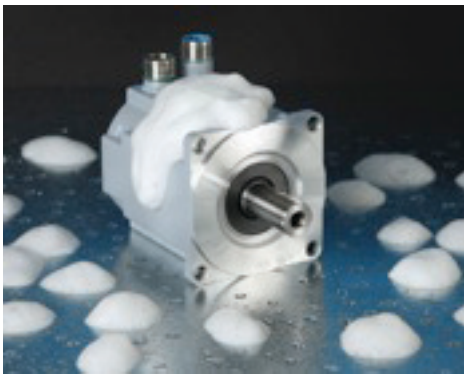

AKM Washdown Food Grade

Part **Numbers:**

AKMxxx-xxxxx-0F: Washdown with unpainted flange
AKMxxx-Wxxxx-0F: Washdown with painted flange

Note: The surface of the washdown food motor has passed all tests as per FDA GlobalMigration for indirect contact with food. Any direct contact with unpacked food is not permitted.

Application Examples:	Food and beverages industries; Cutting, packing, and filling without direct contact with food; Motor positioned laterally or below the food.
Standards:	UL, CE, RoHS, FDA
Surface:	White 2K FDA compliant paint**
Immunity:	Against tested industrial cleaning agents*, corrosion-resistant
Degree of Protection:	IP67
Shaft:	303 Stainless steel (CSN417029)
Rotary Shaft Seal:	PTFE as per FDA
Lubricant:	Food grade as per FDA
Connector:	Stainless steel, smooth surface
Screws:	Stainless steel
Name Plate:	Engraved, additional name plate in the package

** Resistance of the AKM Washdown and AKM Washdown Food Grade surfaces to the following industrial cleaning agents has been tested: P3-topactive DES, P3-topactive LA, P3-topax56, P3-topax 66, P3-topax 91*
***Meets FDA global migration standards*

AKM Systems Overview

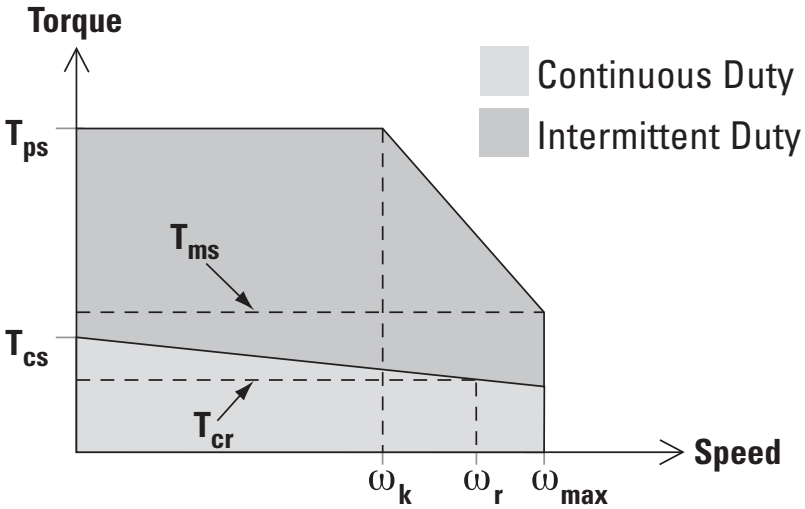

Definitions

- T_{ps} - Peak stall torque for system
- T_{ms} - Peak torque at maximum speed
- T_{cs} - Continuous torque at stall
- T_{cr} - Continuous rated torque (torque at rated power)
- ω_{max} - Maximum speed
- ω_r - Rated speed (speed at rated power)
- ω_k - Speed at knee in peak envelope (intersection of system peak torque with voltage limit line)

How to Build a Servo Drive and Motor System

System torque/speed information on the following pages is designed to help you select the optimum brushless servomotor/drives combination. The nominal values in this data illustrate performance for the recommended motor/controller systems.

Drive and Motor Performance Curves

The performance characteristics of a brushless servo system (motor/drives combination) are described by a torque/speed operating envelope. As shown above, the shaded areas of the curve indicate the continuous duty and intermittent duty zones of the system.

Continuous Duty Zone

The continuous duty zone is bordered by the maximum continuous torque line up to the intersection with the intermittent duty line. The continuous torque line is set by either the motor's maximum rated temperature, or the drives' rated continuous current output, whichever is less. The system voltage line is set by the voltage rating of the drives, the line voltage supplied, and the motor winding. The system can operate on a continuous basis anywhere within this area, assuming the ambient temperature is 40°C or less.

Intermittent Duty Zone

The intermittent duty zone is bordered by the peak torque line and the system voltage line. The peak torque line is set by either the drives' peak current rating, which the drive can produce for a limited time, or the maximum rated peak current for the motor, whichever is less. Refer to the Rating Data on the pages that follow. Note: Higher torque levels may be achievable at higher power levels.

Consult Kollmorgen Customer Support for more details. The system voltage line is set by the voltage rating of the controller, the line voltage applied and the motor winding. Operation in the intermittent zone must be limited to a duty cycle that will produce an RMS system torque falling within the continuous duty area. The RMS torque value is a function of the magnitude of the intermittent torque and the percentage of the time spent at that torque.

The AKM™ brushless servomotor stands alone in the marketplace in terms of flexibility and performance advantages. Kollmorgen's culture of continuous improvement has paid dividends again. The AKM servomotor's innovative design has been polished and optimized. With the new AKD amplifier, the venerable AKM servomotor sets a new standard of refined servo performance, designed to deliver precise motion and more power for your money. Nowhere else will you find a more versatile and complete servo family to meet your needs and exceed your expectations.

Features

- Eight frame sizes (40 to 260 mm)
- 28 frame-stack length combinations
- 117 standard windings for 120/240/400/480 Vac operation as well as low-voltage DC options
- Flexible flange mount and shaft options
- Industry-leading low-cogging contributing to extreme smoothness
- Wide feedback options for high-performance and precision or rugged environments
- Unmatched customization – special windings, special shafts, and much more

AKD with AKM Plug-and-Play Feedback

These feedback devices include electronic motor nameplates allowing plug-and-play commissioning, eliminating the need for drive parameter set-up and servo loop tuning in most applications.

Performance Data

AKM Motor		Single-turn Absolute Accuracy (arc-min)	Single-turn Absolute Resolution (bits)	Single-turn Absolute Feedback Type	Multi-turn Absolute Accuracy (arc-min)	Multi-turn Absolute Resolution (bits)	Multi-turn Absolute Feedback Type
Value Line	AKM1	16	24	C	–	–	–
	AKM2-3	9	24	C	8	20	LB
	AKM4-8	9	24	C	4.66	21	LB
Performance Line	AKM2-4	1.0	27	DA	1.0	27	DB
	AKM5-8	0.333	27	DA	0.333	27	DB

Note: Additional plug-and-play feedback options covered in the feedback devices section on page 60.

AKM Systems Overview

AKM Servomotor with AKD Servo Drive System Performance

AKM Servomotor		AKD Servo Drive	Frame Size NEMA/mm	Cont.Torque at stall Tcs Nm (lb-in)	Peak Torque at stall Tps Nm (lb-in)	Rated Speed Nrtd RPM	Max System Speed[2] RPM	Power Prtd watts	Inertia (Jm) Kg-cm^2 (lb-in-s^2 x10^{-2})
120 Vac	AKM11B	AKD-X00306	17/40	0.18 (1.59)	0.61 (5.4)	4000	8000	80	0.017 (0.0015)
	AKM11C	AKD-X00306	17/40	0.19 (1.68)	0.62 (5.5)	6000	8000	110	0.017 (0.0015)
	AKM12C	AKD-X00306	17/40	0.31 (2.74)	1.08 (9.56)	4000	8000	130	0.031 (0.00274)
	AKM12E	AKD-X00306	17/40	0.31 (2.74)	0.91 (8.05)	8000	8000	230	0.031 (0.00274)
	AKM13C	AKD-X00306	17/40	0.41 (3.63)	1.46 (12.9)	3000	6150	130	0.045 (0.0040)
	AKM13D	AKD-X00306	17/40	0.40 (3.54)	1.36 (12.0)	7000	8000	270	0.045 (0.0040)
	AKM21C	AKD-X00306	23/60	0.48 (4.25)	1.48 (13.1)	2500	5620	120	0.107 (0.0095)
	AKM21E	AKD-X00306	23/60	0.47 (4.16)	1.21 (10.7)	7000	8000	300	0.107 (0.0095)
	AKM22C	AKD-X00306	23/60	0.84 (7.43)	2.39 (21.2)	1000	2820	90	0.161 (0.0142)
	AKM22E	AKD-X00306	23/60	0.87 (7.70)	2.42 (21.4)	3500	5410	290	0.161 (0.0142)
	AKM23D	AKD-X00306	23/60	1.15 (10.2)	3.89 (34.4)	1500	3270	180	0.216 (0.0191)
	AKM23F	AKD-X00606	23/60	1.18 (10.4)	3.88 (34.3)	4500	6290	500	0.216 (0.0191)
	AKM24D	AKD-X00306	23/60	1.40 (12.4)	4.84 (42.8)	1500	2700	210	0.270 (0.0239)
	AKM24F	AKD-X00606	23/60	1.41 (12.5)	4.82 (42.7)	3000	4720	420	0.270 (0.0239)
	AKM31E	AKD-X00306	na/80	1.20 (10.6)	3.23 (28.6)	2500	4240	310	0.330 (0.0292)
	AKM32E	AKD-X00306	na/80	2.04 (18.1)	5.97 (52.8)	1000	2350	210	0.590 (0.0522)
	AKM32H	AKD-X00606	na/80	2.10 (18.6)	6.22 (55.1)	3000	4460	620	0.590 (0.0522)
	AKM33H	AKD-X00606	na/80	2.87 (25.4)	8.55 (75.7)	2500	3310	690	0.850 (0.0752)
	AKM41E	AKD-X00306	34/90	2.01 (17.8)	5.33 (47.2)	1200	2420	240	0.810 (0.0717)
	AKM41H	AKD-X00606	34/90	2.05 (18.1)	5.49 (48.6)	3000	4460	580	0.810 (0.0717)
	AKM43H	AKD-X00606	34/90	4.82 (42.7)	14.0 (124)	1200	1920	560	2.09 (0.185)
	AKM43L	AKD-X01206	34/90	4.73 (41.9)	11.7 (104)	3000	4020	1190	2.09 (0.185)
	AKM44H	AKD-X00606	34/90	5.89 (43.3)	17.0 (150)	1000	1620	570	2.73 (0.242)
	AKM51H	AKD-X00606	42/115	4.79 (42.4)	11.7 (104)	1200	2150	560	3.42 (0.303)
	AKM51L	AKD-X01206	42/115	4.89 (43.3)	10.6 (93.8)	3000	4150	1240	3.42 (0.303)
	AKM52L	AKD-X01206	42/115	8.67 (76.7)	19.6 (173)	1500	2290	1240	6.22 (0.551)
	AKM53L	AKD-X01206	42/115	11.6 (103)	26.5 (235)	1200	1740	1350	9.12 (0.807)
	AKM54L	AKD-X01206	42/115	13.5 (119)	31.3 (277)	1200	1510	1630	11.9 (1.06)
240 Vac	AKM11B	AKD-X00306	17/40	0.18 (1.59)	0.61 (5.4)	8000	8000	140	0.017 (0.0015)
	AKM12C	AKD-X00306	17/40	0.31 (2.74)	1.08 (9.56)	8000	8000	230	0.031 (0.00274)
	AKM13C	AKD-X00306	17/40	0.41 (3.63)	1.46 (12.9)	8000	8000	300	0.045 (0.0040)
	AKM21C	AKD-X00306	23/60	0.48 (4.25)	1.48 (13.1)	8000	8000	320	0.107 (0.0095)
	AKM22C	AKD-X00306	23/60	0.84 (7.43)	2.73 (24.2)	3500	5650	290	0.161 (0.0142)
	AKM22E	AKD-X00306	23/60	0.87 (7.70)	2.42 (21.4)	8000	8000	580	0.161 (0.0142)
	AKM23D	AKD-X00306	23/60	1.15 (10.2)	3.89 (34.4)	5000	6540	530	0.216 (0.0191)
	AKM23F	AKD-X00606	23/60	1.18 (10.4)	3.88 (34.3)	8000	8000	780	0.216 (0.0191)
	AKM24D	AKD-X00306	23/60	1.40 (12.4)	4.84 (42.8)	4000	5410	540	0.270 (0.0239)
	AKM24F	AKD-X00606	23/60	1.41 (12.5)	4.82 (42.7)	8000	8000	930	0.270 (0.0239)
	AKM31C	AKD-X00306	na/80	1.15 (10.2)	3.87 (34.3)	2500	4050	290	0.330 (0.0292)
	AKM31E	AKD-X00306	na/80	1.20 (10.6)	3.23 (28.6)	6000	8000	600	0.330 (0.0292)
	AKM32E	AKD-X00306	na/80	2.04 (18.1)	5.97 (52.8)	3000	4710	600	0.590 (0.0522)
	AKM32H	AKD-X00606	na/80	2.10 (18.6)	6.22 (55.1)	7000	8000	1060	0.590 (0.0522)
	AKM33E	AKD-X00306	na/80	2.80 (24.8)	8.95 (79.2)	2000	3130	550	0.850 (0.0752)
	AKM33H	AKD-X00606	na/80	2.87 (25.4)	8.55 (75.7)	5500	6640	1300	0.850 (0.0752)
	AKM41E	AKD-X00306	34/90	2.01 (17.8)	5.33 (47.2)	3000	4850	570	0.810 (0.0717)
	AKM41H	AKD-X00606	34/90	2.05 (18.1)	5.49 (48.6)	6000	6000	1010	0.810 (0.0717)
	AKM42E	AKD-X00306	34/90	3.42 (30.3)	9.74 (86.2)	1800	2740	590	1.45 (0.128)
	AKM42G	AKD-X00606	34/90	3.51 (31.1)	11.0 (97.4)	3500	4660	1060	1.45 (0.128)
	AKM43H	AKD-X00606	34/90	4.82 (42.7)	14.0 (124)	3000	3850	1210	2.09 (0.185)
	AKM43L	AKD-X01206	34/90	4.73 (41.9)	11.7 (104)	6000	6000	1590	2.09 (0.185)
	AKM44E	AKD-X00306	34/90	5.79 (51.2)	16.5 (146)	1200	1680	660	2.73 (0.242)
	AKM44H	AKD-X00606	34/90	5.89 (43.3)	17.0 (150)	2500	3250	1220	2.73 (0.242)

Note 1: For complete AKM and AKD model nomenclature, refer to pages 71 and 72 respectively.
Note 2: Max mechanical speeds: 8000 RPM for AKM1, 2, 3 and 6000 RPM for AKM4, 5, 6, 7.

AKM Servomotor with AKD Servo Drive System Performance

AKM Servomotor		AKD Servo Drive	Frame Size NEMA/ mm	Cont.Torque at stall Tcs Nm (lb-in)	Peak Torque at stall Tps Nm (lb-in)	Rated Speed Nrtd RPM	Max System Speed[2] RPM	Power Prtd watts	Inertia (Jm) Kg-cm^2 (lb-in-s^2 x10^{-2})
240 Vac	AKM51H	AKD-X00606	42/115	4.79 (42.4)	11.7 (104)	3000	4030	1220	3.42 (0.303)
	AKM51L	AKD-X01206	42/115	4.89 (43.3)	10.6 (93.8)	6000	6000	1260	3.42 (0.303)
	AKM52H	AKD-X00606	42/115	8.48 (75.1)	21.6 (191)	1800	2390	1420	6.22 (0.551)
	AKM52L	AKD-X01206	42/115	8.67 (76.7)	19.6 (173)	3500	4580	2350	6.22 (0.551)
	AKM53H	AKD-X00606	42/115	10.5 (92.9)	27.8 (246)	1500	1970	1650	9.12 (0.807)
	AKM53L	AKD-X01206	42/115	11.6 (103)	26.5 (235)	2500	3450	2510	9.12 (0.807)
	AKM54H	AKD-X00606	42/115	14.2 (126)	37.5 (332)	1000	1340	1400	11.9 (1.06)
	AKM54L	AKD-X01206	42/115	13.5 (119)	31.3 (277)	2500	3030	3010	11.9 (1.06)
	AKM62H	AKD-X00606	na/142	11.9 (105)	29.61 (262)	1000	1560	1170	16.9 (1.50)
	AKM62L	AKD-X01206	na/142	12.2 (108)	26.3 (233)	2500	3380	2620	16.9 (1.50)
	AKM63L	AKD-X01206	na/142	16.8 (149)	39.3 (348)	1500	2260	2330	24.2 (2.14)
	AKM63N	AKD-X02406	na/142	17.0 (150)	40.3 (357)	3000	3450	4080	24.2 (2.14)
	AKM64L	AKD-X01206	na/142	19.7 (174)	44.4 (393)	1500	2070	2890	31.6 (2.80)
	AKM64Q	AKD-X02406	na/142	19.5 (173)	43.1 (381)	3000	3440	4810	31.6 (2.80)
	AKM65L	AKD-X01206	na/142	24.6 (218)	55.4 (490)	1300	1660	3040	40.0 (3.54)
	AKM65P	AKD-X02406	na/142	24.5 (217)	53.9 (477)	2400	2750	4790	40.0 (3.54)
	AKM72P	AKD-X02406	na/180	29.5 (261)	65.8 (606)	1800	2170	4500	64.5 (5.71)
	AKM72Q	AKD-X02406	na/180	24.5 (217)	56.0 (496)	2000	2730	4860	64.5 (5.71)
	AKM73P	AKD-X02406	na/180	41.4 (366)	93.5 (827)	1300	1610	4700	92.1 (8.15)
	AKM73Q	AKD-X02406	na/180	41.5 (367)	76.1 (674)	1500	2020	5250	92.1 (8.15)
	AKM74Q	AKD-X02406	na/180	46.8 (414)	90.7 (803)	1200	1710	5380	120 (10.6)
400 Vac	AKM22C	AKD-X00307	23/60	0.84 (7.43)	2.73 (24.2)	8000	8000	570	0.161 (0.0142)
	AKM23D	AKD-X00307	23/60	1.15 (10.2)	3.89 (34.4)	8000	8000	760	0.216 (0.0191)
	AKM24D	AKD-X00307	23/60	1.40 (12.4)	4.84 (42.8)	8000	8000	920	0.270 (0.0239)
	AKM31C	AKD-X00307	na/80	1.15 (10.2)	3.87 (34.3)	5000	7100	520	0.330 (0.0292)
	AKM32E	AKD-X00307	na/80	2.04 (18.1)	5.97 (52.8)	6500	8000	1020	0.590 (0.0522)
	AKM33E	AKD-X00307	na/80	2.80 (24.8)	8.95 (79.2)	4500	5490	1100	0.850 (0.0752)
	AKM41E	AKD-X00307	34/90	2.01 (17.8)	5.33 (47.2)	6000	6000	990	0.810 (0.0717)
	AKM42E	AKD-X00307	34/90	3.42 (30.3)	9.74 (86.2)	3500	4790	1030	1.45 (0.128)
	AKM42G	AKD-X00607	34/90	3.51 (31.1)	11.0 (97.4)	6000	6000	1470	1.45 (0.128)
	AKM43H	AKD-X00607	34/90	4.82 (42.7)	14 (124)	5500	6000	1620	2.09 (0.185)
	AKM44E	AKD-X00307	34/90	5.79 (51.2)	16.5 (146)	2000	2940	1010	2.73 (0.242)
	AKM44H	AKD-X00607	34/90	5.89 (43.3)	17.0 (150)	4500	5710	1640	2.73 (0.242)
	AKM51H	AKD-X00607	42/115	4.79 (42.4)	11.7 (104)	6000	6000	1230	3.42 (0.303)
	AKM52H	AKD-X00607	42/115	8.48 (75.1)	21.6 (191)	3500	4180	2290	6.22 (0.551)
	AKM52L	AKD-X01207	42/115	8.67 (76.7)	19.6 (173)	6000	6000	2050	6.22 (0.551)
	AKM53H	AKD-X00607	42/115	10.5 (92.9)	27.8 (246)	3000	3450	2770	9.12 (0.807)
	AKM53L	AKD-X01207	42/115	11.6 (103)	26.5 (235)	5000	6000	3140	9.12 (0.807)
	AKM54H	AKD-X00607	42/115	14.2 (126)	37.5 (332)	1800	2340	2350	11.9 (1.06)
	AKM54L	AKD-X01207	42/115	13.5 (119)	31.3 (277)	4500	5310	3830	11.9 (1.06)
	AKM62H	AKD-X00607	na/142	11.9 (105)	29.6 (262)	2000	2730	2140	16.9 (1.50)
	AKM62L	AKD-X01207	na/142	12.2 (108)	26.3 (233)	5000	5920	3880	16.9 (1.50)
	AKM63L	AKD-X01207	na/142	16.8 (149)	39.3 (348)	3000	3950	4040	24.2 (2.14)
	AKM63N	AKD-X02407	na/142	17.0 (150)	40.3 (357)	5000	6000	4900	24.2 (2.14)
	AKM64L	AKD-X01207	na/142	19.7 (174)	44.4 (393)	3000	3640	4900	31.6 (2.80)
	AKM64Q	AKD-X02407	na/142	19.5 (173)	43.1 (381)	5000	6000	5600	31.6 (2.80)
	AKM65L	AKD-X01207	na/142	24.6 (218)	55.4 (490)	2500	2910	5030	40.0 (3.54)
	AKM65P	AKD-X02407	na/142	24.5 (217)	53.9 (477)	4000	4820	6240	40.0 (3.54)
	AKM72L	AKD-X01207	na/180	30.0 (266)	70.5 (624)	1500	2300	3970	64.5 (5.71)
	AKM72P	AKD-X02407	na/180	29.5 (261)	68.5 (606)	3000	3800	6280	64.5 (5.71)
	AKM72Q	AKD-X02407	na/180	24.5 (217)	56.0 (496)	4000	4780	6830	64.5 (5.71)
	AKM73L	AKD-X01207	na/180	41.7 (369)	95.4 (844)	1400	1720	5060	92.1 (8.15)
	AKM73P	AKD-X02407	na/180	41.4 (366)	93.5 (828)	2400	2820	7130	92.1 (8.15)
	AKM73Q	AKD-X02407	na/180	33.0 (292)	76.1 (674)	3000	3550	7920	92.1 (8.15)
	AKM74L	AKD-X01207	na/180	49.7 (440)	114 (1010)	1200	1450	5470	120 (10.6)
	AKM74P	AKD-X02407	na/180	52.3 (463)	125 (1110)	1800	2110	7050	120 (10.6)
	AKM74Q	AKD-X02407	na/180	46.8 (414)	90.7 (803)	2500	3000	8250	120 (10.6)

Note 1: For complete AKM and AKD model nomenclature, refer to pages 71 and 72 respectively.
Note 2: Max mechanical speeds: 8000 RPM for AKM1, 2, 3 and 6000 RPM for AKM4, 5, 6, 7.

AKM Systems Overview

AKM Servomotor with AKD Servo Drive System Performance

AKM Servomotor		Servo Drive	Frame Size NEMA/ mm	Cont.Torque at stall Tcs Nm (lb-in)	Peak Torque at stall Tps Nm (lb-in)	Rated Speed Nrtd RPM	Max System Speed[2] RPM	Power Prtd watts	Inertia (Jm) Kg-cm² (lb-in-s² x10⁻²)
400 Vac	AKM82T	S748	na/260	75 (664)	130 (1150)	2500	3000	12400	172 (15.2)
	AKM83T	S772	na/260	130 (1150)	249 (2200)	2200	2750	16100	334 (29.6)
	AKM84T	S772	na/260	180 (1590)	324 (2860)	1800	2190	19800	495 (43.8)
480 Vac	AKM22C	AKD-X00307	23/60	0.84 (7.43)	2.34 (20.7)	8000	8000	570	0.161 (0.0142)
	AKM23D	AKD-X00307	23/60	1.15 (10.2)	3.89 (34.4)	8000	8000	760	0.216 (0.0191)
	AKM24D	AKD-X00307	23/60	1.40 (12.4)	4.84 (42.8)	8000	8000	920	0.270 (0.0239)
	AKM31C	AKD-X00307	na/80	1.15 (10.2)	3.35 (29.7)	6000	8000	570	0.330 (0.0292)
	AKM32E	AKD-X00307	na/80	2.04 (18.1)	5.97 (52.8)	8000	8000	1020	0.590 (0.0522)
	AKM33E	AKD-X00307	na/80	2.80 (24.8)	8.95 (79.2)	5000	6280	1190	0.850 (0.0752)
	AKM41E	AKD-X00307	34/90	2.01 (17.8)	5.33 (47.2)	6000	6000	990	0.810 (0.0717)
	AKM42E	AKD-X00307	34/90	3.42 (30.3)	9.74 (86.2)	4000	5470	1140	1.45 (0.128)
	AKM42G	AKD-X00607	34/90	3.51 (31.1)	11.0 (97.4)	6000	6000	1470	1.45 (0.128)
	AKM43H	AKD-X00607	34/90	4.82 (42.7)	14.0 (124)	6000	6000	1620	2.09 (0.185)
	AKM44E	AKD-X00307	34/90	5.79 (51.2)	16.5 (146)	2500	3370	1200	2.73 (0.242)
	AKM44H	AKD-X00607	34/90	5.89 (43.3)	17.0 (150)	5500	6000	1690	2.73 (0.242)
	AKM51H	AKD-X00607	42/115	4.79 (42.4)	11.7 (104)	6000	6000	1230	3.42 (0.303)
	AKM52H	AKD-X00607	42/115	8.48 (75.1)	21.6 (191)	4000	4780	2420	6.22 (0.551)
	AKM52L	AKD-X01207	42/115	8.67 (76.7)	19.6 (173)	6000	6000	2050	6.22 (0.551)
	AKM53H	AKD-X00607	42/115	10.5 (92.9)	27.8 (246)	3000	3940	2770	9.12 (0.807)
	AKM53L	AKD-X01207	42/115	11.6 (103)	26.5 (235)	6000	6000	2540	9.12 (0.807)
	AKM54H	AKD-X00607	42/115	14.2 (126)	37.5 (332)	2000	2680	2560	11.9 (1.06)
	AKM54L	AKD-X01207	42/115	13.5 (119)	31.3 (277)	5000	6000	3690	11.9 (1.06)
	AKM62H	AKD-X00607	na/142	11.9 (105)	29.6 (262)	2400	3120	2480	16.9 (1.50)
	AKM62L	AKD-X01207	na/142	12.2 (108)	26.3 (233)	6000	6000	3610	16.9 (1.50)
	AKM63L	AKD-X01207	na/142	16.8 (149)	39.3 (348)	3500	5410	4400	24.2 (2.14)
	AKM63N	AKD-X02407	na/142	17.0 (150)	40.3 (357)	6000	6000	4400	24.2 (2.14)
	AKM64L	AKD-X01207	na/142	19.7 (174)	44.4 (393)	3500	4160	5280	31.6 (2.80)
	AKM64Q	AKD-X02407	na/142	19.5 (173)	43.1 (381)	6000	6000	4620	31.6 (2.80)
	AKM65L	AKD-X01207	na/142	24.6 (218)	55.4 (490)	2800	3320	5450	40.0 (3.54)
	AKM65P	AKD-X02407	na/142	24.5 (217)	53.9 (477)	4500	5500	6360	40.0 (3.54)
	AKM72L	AKD-X01207	na/180	30.0 (266)	70.5 (624)	1800	2630	4580	64.5 (5.71)
	AKM72P	AKD-X02407	na/180	29.5 (261)	68.5 (606)	3000	4340	6680	64.5 (5.71)
	AKM72Q	AKD-X02407	na/180	29.5 (261)	56.0 (496)	4500	5460	6640	64.5 (5.71)
	AKM73L	AKD-X01207	na/180	41.7 (369)	95.4 (844)	1500	1970	5620	92.1 (8.15)
	AKM73P	AKD-X02407	na/180	41.4 (366)	93.5 (828)	2400	3220	7130	92.1 (8.15)
	AKM73Q	AKD-X02407	na/180	41.5 (367)	76.1 (674)	3500	4050	8060	92.1 (8.15)
	AKM74L	AKD-X01207	na/180	49.7 (440)	114 (1010)	1400	1660	6080	120 (10.6)
	AKM74P	AKD-X02407	na/180	52.3 (463)	125 (1110)	1800	2420	7050	120 (10.6)
	AKM74Q	AKD-X02407	na/180	46.8 (414)	90.7 (803)	3000	3430	8580	120 (10.6)
	AKM82T	S748	na/260	75 (664)	130 (1150)	3000	3000	11900	172 (15.2)
	AKM83T	S772	na/260	130 (1150)	249 (2200)	2500	3000	15700	334 (29.6)
	AKM84T	S772	na/260	180 (1590)	324 (2860)	2000	2500	19500	495 (43.8)

Note 1: For complete AKM, AKD and S700 model nomenclature, refer to pages 71, 72 and 73 respectively.
Note 2: Max mechanical speeds: 8000 RPM for AKM1, 2, 3 and 6000 RPM for AKM4, 5, 6, 7.
* AKD pairings not currently released, please contact Kollmorgen Customer Support for specific drive pairing options and system performance.

Notes

AKM1x Outline Drawings

AKM1x Frame

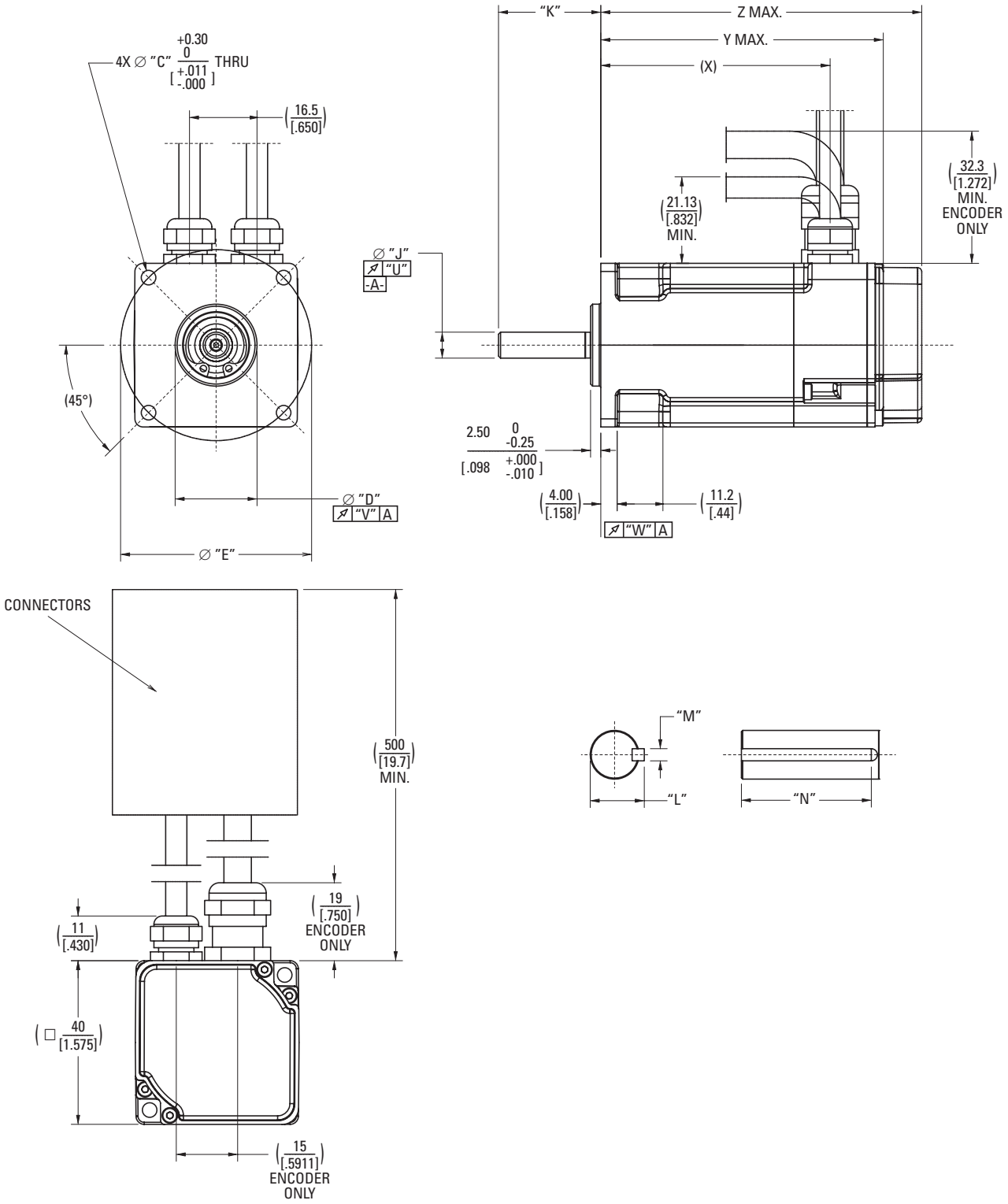

AKM1x Dimension Data

AKM1x Dimension Data

Mounting Code	"C"	"D"	"E"	"F"	"H"	"J"	"K"	"L"
AK	4.30 [.169]	$30^{0}_{-0.021}$ h7 [$1.1811^{+.0000}_{-.0008}$]	46 [1.811]	–	–	$8^{0}_{-0.015}$ h7 [$.3150^{+.0000}_{-.0006}$]	25 [.984]	$9.20^{0}_{-0.13}$ [$.362^{+.000}_{-.005}$]
AN	4.30 [.169]	$30^{0}_{-0.021}$ h7 [$1.1811^{+.0000}_{-.0008}$]	46 [1.811]	–	–	$8^{0}_{-0.015}$ h7 [$.3150^{+.0000}_{-.0006}$]	25 [.984]	–
BN	356 [.140]	20.02 ± 0.02 [.788 ± .001]	46.69 [1.838]	–	–	$6.350^{0}_{-0.012}$ [$.2500^{+.0000}_{-.0005}$]	25 [.984]	–
CK	3.40 [.134]	$30^{0}_{-0.021}$ h7 [$1.1811^{+.0000}_{-.0008}$]	45 [1.772]	–	–	$8^{0}_{-0.015}$ h7 [$.3150^{+.0000}_{-.0006}$]	25 [.984]	$9.20^{0}_{-0.13}$ [$.362^{+.000}_{-.005}$]
CN	3.40 [.134]	$30^{0}_{-0.021}$ h7 [$1.1811^{+.0000}_{-.0008}$]	45 [1.772]	–	–	$8^{0}_{-0.015}$ h7 [$.3150^{+.0000}_{-.0006}$]	25 [.984]	–

Mounting Code	"M"	"N"
AK	$3^{0}_{-0.025}$ [$.1181^{+.0000}_{-.0010}$]	$14^{0}_{-0.2}$ [$.551^{+.000}_{-.008}$]
AN	–	–
BN	–	–
CK	$3^{0}_{-0.025}$ [$.1181^{+.0000}_{-.0010}$]	$14^{0}_{-0.2}$ [$.551^{+.000}_{-.008}$]
CN	–	–

MODEL	(X)	Y MAX (W/ RESOLVER)	Z MAX (W/ SFD OR ENCODER)
AKM11	56.1 [2.21]	69.6 [2.74]	79.0 [3.11]
AKM12	75.1 [2.96]	88.6 [3.49]	98.0 [3.86]
AKM13	94.1 [3.70]	107.6 [4.24]	117.0 [4.61]

Note 1: Dimensions are in mm [inches].
Note 2: Product designed in metric. English conversions provided for reference only.

AKM1x Performance Data

AKM1x Performance Data – Up to 320 Vdc

					AKM11			AKM12		AKM13	
	Parameters	Tol	Symbol	Units	B	C	E	C	E	C	D
	Max Rated DC Bus Voltage	Max	Vbus	Vdc	320	160	75	320	160	320	160
	Continuous Torque (Stall) for ΔT winding = 100°C ①②⑦⑧	Nom	T_{cs}	Nm	0.183	0.185	0.185	0.310	0.310	0.409	0.401
				lb-in	1.62	1.64	1.64	2.74	2.74	3.62	3.55
	Continuous Current (Stall) for ΔT winding = 100°C ①②⑦⑧	Nom	I_{cs}	A_{rms}	1.16	1.45	2.91	1.51	2.72	1.48	2.40
	Continuous Torque (Stall) for ΔT winding = 60°C ②	Nom	T_{cs}	Nm	0.146	0.148	0.148	0.248	0.248	0.327	0.320
				lb-in	1.29	1.31	1.31	2.19	2.19	2.89	2.83
	Max Mechanical Speed ⑤	Nom	N_{max}	rpm	8000	8000	8000	8000	8000	8000	8000
	Peak Torque ①②	Nom	T_p	Nm	0.609	0.614	0.611	1.08	1.08	1.46	1.44
				lb-in	5.39	5.43	5.41	9.6	9.6	12.9	12.7
	Peak Current	Nom	I_p	A_{rms}	4.65	5.79	11.6	6.06	10.9	5.93	9.6
75 Vdc	Rated Torque (speed) ①②⑦⑧⑨		T_{rtd}	Nm	-	-	0.176	-	0.309	-	0.401
				lb-in	-	-	1.56	-	2.73	-	3.55
	Rated Speed		N_{rtd}	rpm	-	-	600	-	3000	-	2000
	Rated Power (speed) ①②⑦⑧		P_{rtd}	kW	-	-	0.11	-	0.10	-	0.08
				Hp	-	-	0.15	-	0.13	-	0.11
160 Vdc	Rated Torque (speed) ①②⑦⑧⑨		T_{rtd}	Nm	0.180	0.176	-	0.304	0.279	0.407	0.365
				lb-in	1.59	1.56	-	2.69	2.47	3.60	3.23
	Rated Speed		N_{rtd}	rpm	4000	6000	-	4000	8000	3000	7000
	Rated Power (speed) ①②⑦⑧		P_{rtd}	kW	0.08	0.11	-	0.13	0.23	0.13	0.27
				Hp	0.10	0.15	-	0.17	0.31	0.17	0.36
320 Vdc	Rated Torque (speed) ①②⑦⑧⑨		T_{rtd}	Nm	0.167	-	-	0.279	-	0.364	-
				lb-in	1.48	-	-	2.47	-	3.22	-
	Rated Speed		N_{rtd}	rpm	8000	-	-	8000	-	8000	-
	Rated Power (speed) ①②⑦⑧		P_{rtd}	kW	0.14	-	-	0.23	-	0.30	-
				Hp	0.19	-	-	0.31	-	0.41	-
560 Vdc	Rated Torque (speed) ①②⑦⑧⑨		T_{rtd}	Nm	-	-	-	-	-	-	-
				lb-in	-	-	-	-	-	-	-
	Rated Speed		N_{rtd}	rpm	-	-	-	-	-	-	-
	Rated Power (speed) ①②⑦⑧		P_{rtd}	kW	-	-	-	-	-	-	-
				Hp	-	-	-	-	-	-	-
640 Vdc	Rated Torque (speed) ①②⑦⑧⑨		T_{rtd}	Nm	-	-	-	-	-	-	-
				lb-in	-	-	-	-	-	-	-
	Rated Speed		N_{rtd}	rpm	-	-	-	-	-	-	-
	Rated Power (speed) ①②⑦⑧		P_{rtd}	kW	-	-	-	-	-	-	-
				Hp	-	-	-	-	-	-	-

See following page for notes.

AKM1x Performance Data – Up to 320 Vdc (Continued)

				AKM11			AKM12		AKM13	
Parameters	**Tol**	**Symbol**	**Units**	**B**	**C**	**E**	**C**	**E**	**C**	**D**
Torque Constant ①	±10%	K_t	Nm/A_{rms}	0.158	0.129	0.064	0.207	0.112	0.278	0.169
			lb-in/ A_{rms}	1.40	1.14	0.57	1.83	0.99	2.46	1.50
Back EMF Constant ⑥	±10%	K_e	V/k_{rpm}	10.2	8.3	4.1	13.3	7.2	17.9	10.9
Motor Constant	Nom	K_m	N-m/√W	0.0302	0.0303	0.0296	0.0480	0.0463	0.0618	0.0593
			lb-in/√W	0.267	0.268	0.262	0.425	0.410	0.547	0.525
Resistance (line-line) ⑥	±10%	R_m	ohm	18.23	12.11	3.11	12.4	3.9	13.5	5.41
Inductance (line-line)		L	mH	12.5	8.3	2.04	9.1	2.7	10.3	3.8
Inertia (includes Resolver feedback) ③	±10%	J_m	$kg\text{-}cm^2$	0.017			0.031		0.045	
			$lb\text{-}in\text{-}s^2$	1.5E-05			2.7E-05		4.0E-05	
Optional Brake Inertia (additional)	±10%	J_m	$kg\text{-}cm^2$	-			-		-	
			$lb\text{-}in\text{-}s^2$	-			-		-	
Weight		W	kg	0.35			0.49		0.63	
			lb	0.8			1.1		1.4	
Static Friction ①⑨		T_f	Nm	0.0011			0.0021		0.0031	
			lb-in	0.01			0.02		0.03	
Viscous Damping ①		K_{dv}	Nm/k_{rpm}	0.0005			0.001		0.0015	
			$lb\text{-}in/k_{rpm}$	0.004			0.009		0.013	
Thermal Time Constant		TCT	minutes	4			6		7	
Thermal Resistance		$R_{thw\text{-}a}$	°C/W	1.83			1.63		1.53	
Pole Pairs				3			3		3	
Heat Sink Size				10"x10"x1/4" Aluminum Plate			10"x10"x1/4" Aluminum Plate		10"x10"x1/4" Aluminum Plate	

Notes:
① Motor winding temperature rise, ΔT=100°C, at 40°C ambient.
② All data referenced to sinusoidal commutation.
③ Add parking brake if applicable for total inertia.
④ Motor with standard heat sink.
⑤ May be limited at some values of Vbus.
⑥ Measured at 25°C.
⑦ No brake motor option on AKM1.
⑧ For non-resolver feedback options: no continuous torque reduction.
⑨ For motors with optional shaft seal, reduce torque shown by 0.021 Nm (0.19 lb-in), and increase T_f by the same amount.

Additional Notes: See system data beginning on page 14 for typical torque/speed performance.
Additional windings can be found through our online Motioneering sizing and selection software tool. See page 73 for more information.

AKM2x Outline Drawings

AKM2x Frame

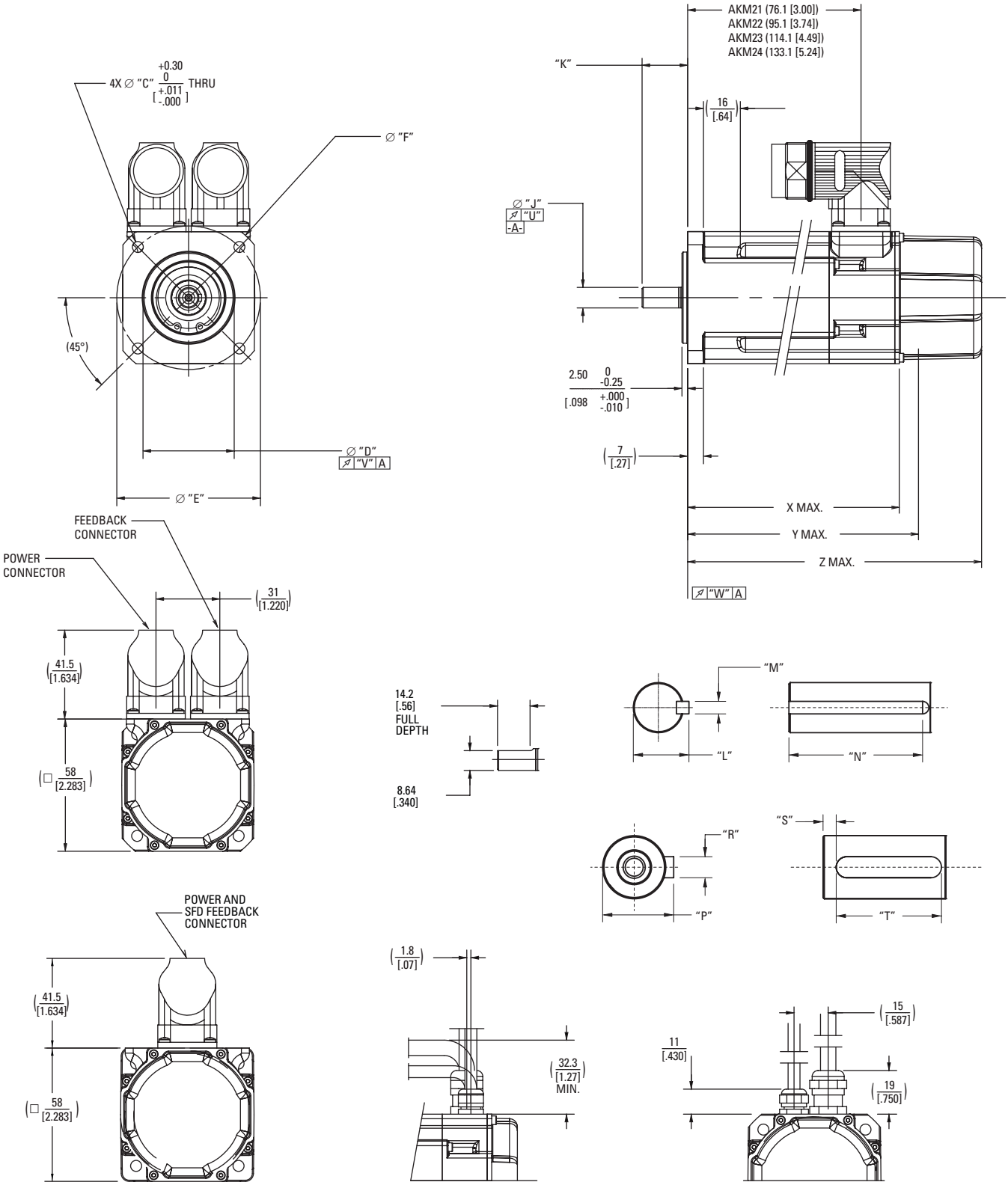

AKM2x Dimension Data

AKM2x Dimension Data

Mounting Code	"C"	"D"	"E"	"F"	"H"	"J"	"K"	"L"
AC	4.80 [.189]	$40^{+0.011}_{-0.005}$ j6 $[1.5748^{+.0004}_{-.0002}]$	63 [2.480]	74 [2.913]	D M3 DIN 332	$9^{+0.010}_{+0.001}$ k6 $[.3543^{+.0004}_{+.0000}]$	20.0 [.79]	–
AN	4.80 [.189]	$40^{+0.011}_{-0.005}$ j6 $[1.5748^{+.0004}_{-.0002}]$	63 [2.480]	74 [2.913]	D M3 DIN 332	$9^{+0.010}_{+0.001}$ k6 $[.3543^{+.0004}_{+.0000}]$	20.0 [.79]	–
BN	5.10 [.201]	$38.10^{0}_{-0.05}$ $[1.500^{+.000}_{-.002}]$	66.68 [2.625]	–	–	$9.525^{+0}_{-0.013}$ $[.3750^{+.0000}_{-.0005}]$	31.75 ± 0.79 [1.250 ± .031]	–
CK	5.80 [.228]	$50^{0}_{-0.016}$ h6 $[1.9685^{+.0000}_{-.0006}]$	70 [2.756]	–	–	$14^{+0}_{-0.011}$ h6 $[.5512^{+.0000}_{-.0004}]$	30.0 [1.181]	$16^{0}_{-0.13}$ $[.630^{+.000}_{-.005}]$
DC	5.80 [.228]	$40^{+0.011}_{-0.005}$ j6 $[1.5748^{+.0004}_{-.0002}]$	65 [2.559]	–	D M3 DIN 332	$9^{+0.010}_{+0.001}$ k6 $[.3543^{+.0004}_{+.0000}]$	20.0 [.79]	–
DN	5.80 [.228]	$40^{+0.011}_{-0.005}$ j6 $[1.5748^{+.0004}_{-.0002}]$	65 [2.559]	–	D M3 DIN 332	$9^{+0.010}_{+0.001}$ k6 $[.3543^{+.0004}_{+.0000}]$	20.0 [.79]	–
EN & EF	5.10 [.201]	$38.10^{0}_{-0.05}$ $[1.500^{+.000}_{-.002}]$	66.68 [2.625]	–	–	$9.525^{+0}_{-0.013}$ $[.3750^{+.0000}_{-.0005}]$	20.57 ± 0.25 [0.810 ± 0.010]	–

Mounting Code	"M"	"N"	"P"	"R"	"S"	"T"	"U"	"V"	"W"
AC	–	–	$10.2^{0}_{-0.13}$ $[.402^{+.000}_{-.005}]$	$3^{0}_{-0.025}$ $[.1181^{+.0000}_{-.0010}]$	300 [.118]	$12^{0}_{-0.20}$ $[.472^{+.000}_{-.008}]$	0.030 [.0011]	0.060 [.0023]	0.060 [.0023]
AN	–	–	–	–	–	–	0.030 [.0011]	0.060 [.0023]	0.060 [.0023]
BN	–	–	–	–	–	–	0.051 [.0020]	0.10 [.004]	0.10 [.004]
CK	$5^{0}_{-0.03}$ N9 $[.197^{+.000}_{-.001}]$	$20^{0}_{-0.02}$ $[.787^{+.000}_{-.008}]$	–	–	–	–	0.035 [0.0013]	0.080 [0.0031]	0.080 [.0031]
DC	–	–	$10.2^{0}_{-0.13}$ $[.402^{+.000}_{-.005}]$	$3^{0}_{-0.025}$ $[.1181^{+.0000}_{-.0010}]$	300 [.118]	$12^{0}_{-0.20}$ $[.472^{+.000}_{-.008}]$	0.030 [.0011]	0.060 [.0023]	0.060 [.0023]
DN	–	–	–	–	–	–	0.030 [.0011]	0.060 [.0023]	0.060 [.0023]
EN & EF	–	–	–	–	–	–	0.051 [.0020]	0.10 [.004]	0.10 [.004]

MODEL	(X MAX) ("C" Connector Option W/ Resolver)	Y MAX	Z MAX (W/ BRAKE)
AKM21	86.2 [3.39]	95.4 [3.76]	129.5 [5.10]
AKM22	105.2 [4.14]	114.4 [4.50]	148.5 [5.85]
AKM23	124.2 [4.89]	133.4 [5.25]	167.5 [6.59]
AKM24	143.2 [5.64]	152.4 [6.00]	186.5 [7.34]

Note: Dimensions are in mm [inches]. Product designed in metric. English conversions provided for reference only.

AKM2x Performance Data

AKM2x Performance Data – Up to 640 Vdc

					AKM21			AKM22			AKM23			AKM24		
	Parameters	Tol	Symbol	Units	C	E	G	C	E	G	D	E	F	D	E	F
	Max Rated DC Bus Voltage	Max	Vbus	Vdc	320	160	75	640	320	160	640	320	320	640	320	320
	Continuous Torque (Stall) for ΔT winding = 100°C ①②⑦⑧⑨	Nom	T_{cs}	Nm	0.48	0.50	0.50	0.84	0.87	0.88	1.16	1.16	1.18	1.41	1.40	1.42
				lb-in	4.2	4.4	4.4	7.4	7.7	7.8	10.3	10.3	10.4	12.5	12.4	12.6
	Continuous Current (Stall) for ΔT winding = 100°C ①②⑦⑧⑨	Nom	I_{cs}	A_{rms}	1.58	3.11	4.87	1.39	2.73	4.82	2.19	2.78	4.31	2.21	2.79	3.89
	Continuous Torque (Stall) for ΔT winding = 60°C ②	Nom	T_{cs}	Nm	0.38	0.40	0.40	0.67	0.70	0.70	0.92	0.93	0.94	1.13	1.12	1.14
				lb-in	3.4	3.5	3.5	5.9	6.2	6.2	8.2	8.23	8.4	10.0	9.91	10.1
	Max Mechanical Speed ⑤	Nom	N_{max}	rpm	8000	8000	8000	8000	8000	8000	8000	8000	8000	8000	8000	8000
	Peak Torque ①②	Nom	T_p	Nm	1.47	1.49	1.51	2.73	2.76	2.79	3.84	3.86	3.88	4.76	4.79	4.82
				lb-in	13.0	13.2	13.4	24.2	24.4	24.7	34.0	34.2	34.3	42.1	42.4	42.7
	Peak Current	Nom	I_p	A_{rms}	6.3	12.4	19.5	5.6	10.9	19.3	8.8	11.1	17.2	8.8	11.2	15.6
75 Vdc	Rated Torque (speed) ①②⑦⑧⑨⑩		T_{rtd}	Nm	-	0.48	0.46	-	0.85	0.83	-	-	1.15	-	-	1.39
				lb-in	-	4.2	4.1	-	7.5	7.4	-	-	10.2	-	-	12.3
	Rated Speed		N_{rtd}	rpm	-	2000	4000	-	1000	2500	-	-	1500	-	-	1000
	Rated Power (speed) ①②⑦⑧⑨		P_{rtd}	kW	-	0.10	0.19	-	0.09	0.22	-	-	0.18	-	-	0.15
				Hp	-	0.13	0.26	-	0.12	0.29	-	-	0.24	-	-	0.20
160 Vdc	Rated Torque (speed) ①②⑦⑧⑨⑩		T_{rtd}	Nm	0.46	0.41	-	0.83	0.81	0.74	1.12	1.1	1.07	1.36	1.34	1.33
				lb-in	4.0	3.7	-	7.3	7.1	6.5	9.9	9.7	9.5	12.0	11.9	11.8
	Rated Speed		N_{rtd}	rpm	2500	7000	-	1000	3500	7000	1500	2500	4500	1500	2000	3000
	Rated Power (speed) ①②⑦⑧⑨		P_{rtd}	kW	0.12	0.30	-	0.09	0.30	0.54	0.18	0.29	0.50	0.21	0.28	0.42
				Hp	0.16	0.41	-	0.12	0.40	0.72	0.24	0.39	0.68	0.29	0.38	0.56
320 Vdc	Rated Torque (speed) ①②⑦⑧⑨⑩		T_{rtd}	Nm	0.39	-	-	0.78	.70	-	1.03	0.98	0.94	1.29	1.24	1.12
				lb-in	3.4	-	-	6.9	6.2	-	9.1	8.7	8.3	11.4	11.0	9.9
	Rated Speed		N_{rtd}	rpm	8000	-	-	3500	8000	-	5000	6500	8000	4000	5500	8000
	Rated Power (speed) ①②⑦⑧⑨		P_{rtd}	kW	0.32	-	-	0.29	0.59	-	0.54	0.67	0.79	0.54	0.71	0.94
				Hp	0.43	-	-	0.38	0.79	-	0.72	0.89	1.06	0.72	0.96	1.26
560 Vdc	Rated Torque (speed) ①②⑦⑧⑨⑩		T_{rtd}	Nm	-	-	-	0.68	-	-	0.92	-	-	1.11	-	-
				lb-in	-	-	-	6.0	-	-	8.1	-	-	9.8	-	-
	Rated Speed		N_{rtd}	rpm	-	-	-	8000	-	-	8000	-	-	8000	-	-
	Rated Power (speed) ①②⑦⑧⑨		P_{rtd}	kW	-	-	-	0.57	-	-	0.77	-	-	0.93	-	-
				Hp	-	-	-	0.76	-	-	1.03	-	-	1.25	-	-
640 Vdc	Rated Torque (speed) ①②⑦⑧⑨⑩		T_{rtd}	Nm	-	-	-	0.68	-	-	0.92	-	-	1.11	-	-
				lb-in	-	-	-	6.0	-	-	8.1	-	-	9.8	-	-
	Rated Speed		N_{rtd}	rpm	-	-	-	8000	-	-	8000	-	-	8000	-	-
	Rated Power (speed) ①②⑦⑧⑨		P_{rtd}	kW	-	-	-	0.57	-	-	0.77	-	-	0.93	-	-
				Hp	-	-	-	0.76	-	-	1.03	-	-	1.25	-	-

See following page for notes.

AKM2x Performance Data – Up to 640 Vdc (Continued)

				AKM21			AKM22			AKM23			AKM24		
Parameters	Tol	Symbol	Units	C	E	G	C	E	G	D	E	F	D	E	F
Torque Constant ①	±10%	K_t	Nm/A_{rms}	0.30	0.16	0.10	0.61	0.32	0.18	0.52	0.42	0.27	0.63	0.50	0.36
			$lb\text{-}in/A_{rms}$	2.7	1.4	0.9	5.4	2.8	1.6	4.6	3.7	2.4	5.6	4.4	3.2
Back EMF Constant ⑥	±10%	K_e	V/k_{rpm}	19.5	10.2	6.6	39	20.4	11.7	33.8	27.0	17.6	40.8	32.5	23.4
Motor Constant	Nom	K_m	$N\text{-}m/\sqrt{W}$	0.0679	0.0706	0.0680	0.111	0.114	0.110	0.143	0.147	0.144	0.171	0.175	0.171
			$lb\text{-}in/\sqrt{W}$	0.601	0.625	0.602	0.986	1.01	0.98	1.27	1.30	1.28	1.52	1.55	1.52
Resistance (line-line) ⑥	±10%	R_m	ohm	13	3.42	1.44	19.98	5.22	1.77	8.77	5.44	2.34	9.02	5.44	2.94
Inductance (line-line)		L	mH	19	5.2	2.18	35.5	9.7	3.19	17.3	11.1	4.68	18.7	11.8	6.16
Inertia (includes Resolver feedback) ③	±10%	J_m	$kg\text{-}cm^2$	0.11			0.16			0.22			0.27		
			$lb\text{-}in\text{-}s^2$	9.5E-05			1.4E-04			1.9E-04			2.4E-04		
Optional Brake Inertia (additional)	±10%	J_m	$kg\text{-}cm^2$	0.012			0.012			0.012			0.012		
			$lb\text{-}in\text{-}s^2$	1.1E-05			1.1E-05			1.1E-05			1.1E-05		
Weight		W	kg	0.82			1.1			1.38			1.66		
			lb	1.8			2.4			3.0			3.7		
Static Friction ①⑩		T_f	Nm	0.002			0.005			0.007			0.01		
			lb-in	0.02			0.04			0.06			0.09		
Viscous Damping ①		K_{dv}	Nm/k_{rpm}	0.0046			0.0055			0.0065			0.0074		
			$lb\text{-}in/k_{rpm}$	0.04			0.05			0.06			0.07		
Thermal Time Constant		TCT	minutes	8			9			1.			11		
Thermal Resistance		$R_{thw\text{-}a}$	°C/W	1.43			1.19			1.10			1.07		
Pole Pairs				3			3			3			3		
Heat Sink Size				10"x10"x1/4" Aluminum Plate			10"x10"x1/4" Aluminum Plate			10"x10"x1/4" Aluminum Plate			10"x10"x1/4" Aluminum Plate		

Notes:
① Motor winding temperature rise, ΔT=100°C, at 40°C ambient.
② All data referenced to sinusoidal commutation.
③ Add parking brake if applicable for total inertia.
④ Motor with standard heat sink.
⑤ May be limited at some values of Vbus.
⑥ Measured at 25°C.
⑦ Brake motor option reduces continuous torque ratings by:
AKM21 = 0.00 AKM22 = 0.01 Nm AKM23 = 0.02 Nm AKM24 = 0.05 Nm
⑧ For non-resolver feedback options: no continuous torque reduction.
⑨ Motors with non-resolver feedback and brake option, reduce continuous torque by:
AKM21 = 0.00 AKM22 = 0.02 Nm AKM23 = 0.05 Nm AKM24 = 0.12 Nm
⑩ For motors with optional shaft seal, reduce torque shown by 0.047 Nm (0.41 lb-in), and increase T_f by the same amount.

Additional Notes: See system data beginning on page 14 for typical torque/speed performance.
Additional windings can be found through our online Motioneering sizing and selection software tool. See page 73 for more information.

AKM3x Outline Drawings

AKM3x Frame

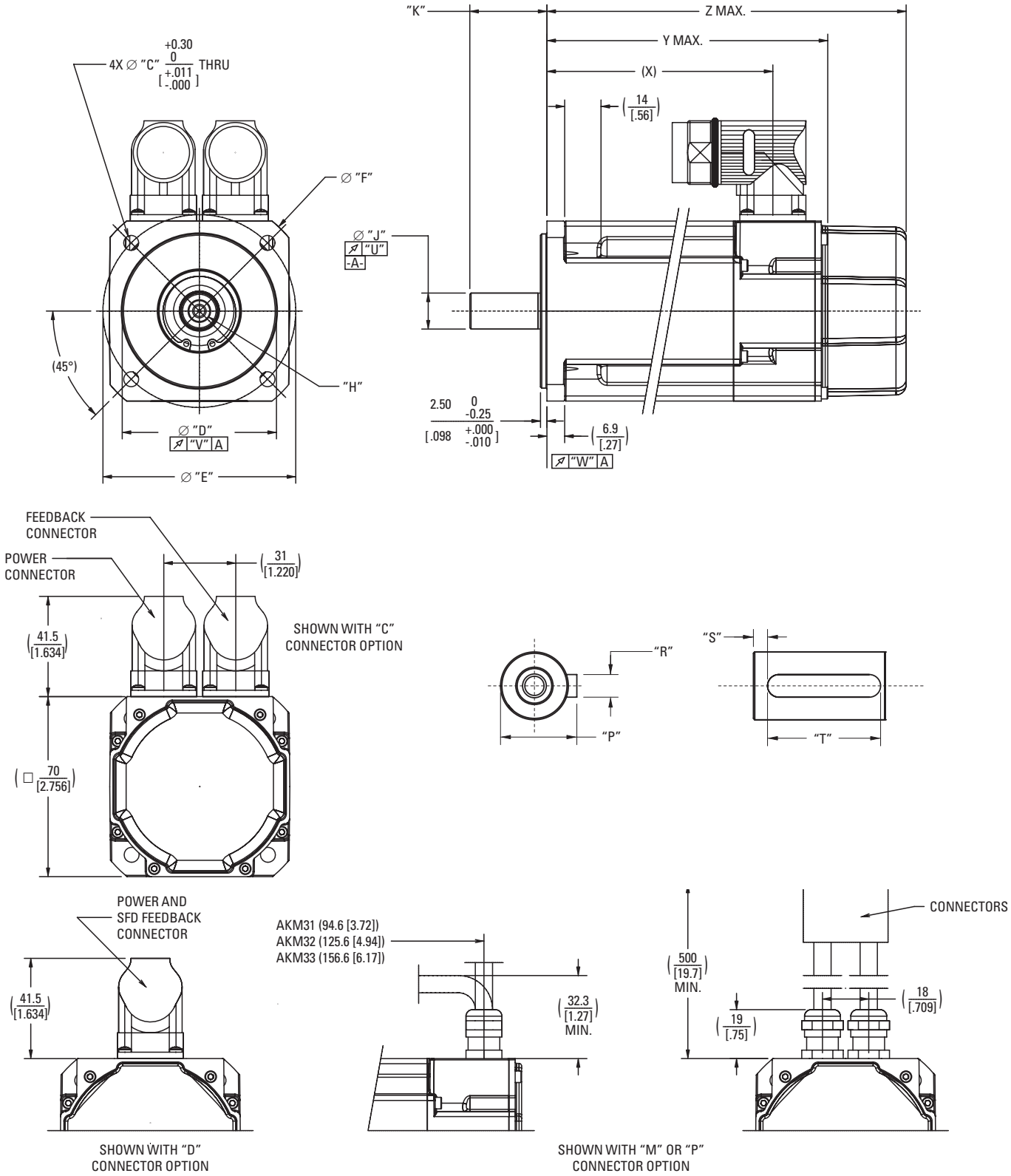

AKM3x Dimension Data

AKM3x Dimension Data

Mounting Code	"C"	"D"	"E"	"F"	"H"	"J"	"K"	"P"
AC	5.80 [.228]	60 +0.012 -0.007 j6 [2.3622 +.0004 -.0002]	75 [2.953]	90 [3.543]	D M5 DIN 332	14 +0.012 +0.001 k6 [.5512 +.0005 +.0000]	30.0 [1.181]	16 0 -0.13 [.630 +.000 -.005]
AN	5.80 [.228]	60 +0.012 -0.007 j6 [2.3622 +.0004 -.0002]	75 [2.953]	90 [3.543]	D M5 DIN 332	14 +0.012 +0.001 k6 [.5512 +.0005 +.0000]	30.0 [1.181]	–
CC	5.80 [.228]	60 +0.012 -0.007 j6 [2.3622 +.0004 -.0002]	85 [3.346]	–	D M5 DIN 332	14 +0.012 +0.001 k6 [.5512 +.0005 +.0000]	30.0 [1.181]	16 0 -0.13 [.630 +.000 -.005]
CN	5.80 [.228]	60 +0.012 -0.007 j6 [2.3622 +.0004 -.0002]	85 [3.346]	–	D M5 DIN 332	14 +0.012 +0.001 k6 [.5512 +.0005 +.0000]	30.0 [1.181]	–
GC	5.80 [.228]	60 +0.012 -0.007 j6 [2.3622 +.0004 -.0002]	75 [2.953]	90 [3.543]	D M5 DIN 332	11 +0.012 +0.001 k6 [.4331 +.0005 +.0000]	23 [.906]	12.5 0 -0.13 [.492 +.000 -.005]
GN	5.80 [.228]	60 +0.012 -0.007 j6 [2.3622 +.0004 -.0002]	75 [2.953]	90 [3.543]	D M5 DIN 332	11 +0.012 +0.001 k6 [.4331 +.0005 +.0000]	23 [.906]	–

Mounting Code	"R"	"S"	"T"	"U"	"V"	"W"
AC	5 0 -0.03 N9 [.197 +.000 -.001]	5.00 [1.97]	20 0 -0.20 [.787 +.000 -.008]	0.035 [.0013]	0.080 [.0031]	0.080 [.0031]
AN	–	–	–	0.035 [.0013]	0.080 [.0031]	0.080 [.0031]
CC	5 0 -0.03 N9 [.197 +.000 -.001]	5.00 [1.97]	20 0 -0.20 [.787 +.000 -.008]	0.035 [.0013]	0.080 [.0031]	0.080 [.0031]
CN	–	–	–	0.035 [.0013]	0.080 [.0031]	0.080 [.0031]
GC	4 0 -0.03 N9 [.157 +.000 -.001]	3.5 [.138]	16 0 -0.20 [.630 +.000 -.008]	0.035 [.0013]	0.080 [.0031]	0.080 [.0031]
GN	–	–	–	0.035 [.0013]	0.080 [.0031]	0.080 [.0031]
CN	–	–	–	0.035 [.0013]	0.080 [.0031]	0.080 [.0031]

MODEL	(X)	Y MAX	Z MAX (W/ BRAKE)
AKM31	87.9 [3.46]	109.8 [4.32]	141.3 [5.56]
AKM32	118.9 [4.68]	140.8 [5.54]	172.3 [6.78]
AKM33	149.9 [5.90]	171.8 [6.76]	203.3 [8.00]

Note 1: Dimensions are in mm [inches].
Note 2: Product designed in metric. English conversions provided for reference only.

AKM3x Performance Data

AKM3x Performance Data – Up to 640 Vdc

					AKM31			AKM32			AKM33		
	Parameters	Tol	Symbol	Units	C	E	H	C	E	H	C	E	H
	Max Rated DC Bus Voltage	Max	Vbus	Vdc	640	320	160	640	640	320	640	640	320
	Continuous Torque (Stall) for ΔT winding = 100°C ①②⑦⑧⑨	Nom	T_{cs}	Nm	1.15	1.20	1.23	2.00	2.04	2.10	2.71	2.79	2.88
				lb-in	10.2	10.6	10.8	17.7	18.1	18.6	24.0	24.7	25.5
	Continuous Current (Stall) for ΔT winding = 100°C ①②⑦⑧⑨	Nom	I_{cs}	A_{rms}	1.37	2.99	5.85	1.44	2.82	5.50	1.47	2.58	5.62
	Continuous Torque (Stall) for ΔT winding = 60°C ②	Nom	T_{cs}	Nm	0.92	0.96	0.98	1.60	1.63	1.68	2.17	2.23	2.30
				lb-in	8.1	8.5	8.7	14.2	14.4	14.9	19.2	19.7	20.4
	Max Mechanical Speed ⑤	Nom	N_{max}	rpm	8000	8000	8000	8000	8000	8000	8000	8000	8000
	Peak Torque ①②	Nom	T_p	Nm	3.88	4.00	4.06	6.92	7.11	7.26	9.76	9.96	10.22
				lb-in	34.3	35.4	35.9	61.2	62.9	64.3	86.4	88.1	90.5
	Peak Current	Nom	I_p	A_{rms}	5.5	12.0	23.4	5.7	11.3	22.0	5.9	10.3	22.5
75 Vdc	Rated Torque (speed) ①②⑦⑧⑨⑩		T_{rtd}	Nm	-	1.19	1.20	-	-	2.06	-	-	2.82
				lb-in	-	10.5	10.6	-	-	18.2	-	-	24.6
	Rated Speed		N_{rtd}	rpm	-	750	2000	-	-	1200	-	-	800
	Rated Power (speed) ①②⑦⑧⑨		P_{rtd}	kW	-	0.09	0.25	-	-	0.26	-	-	0.24
				Hp	-	0.13	0.34	-	-	0.35	-	-	0.32
160 Vdc	Rated Torque (speed) ①②⑦⑧⑨⑩		T_{rtd}	Nm	-	1.17	0.97	-	2.01	1.96	-	-	2.66
				lb-in	-	10.3	8.6	-	17.7	17.4	-	-	23.5
	Rated Speed		N_{rtd}	rpm	-	2500	6000	-	1000	3000	-	-	2500
	Rated Power (speed) ①②⑦⑧⑨		P_{rtd}	kW	-	0.31	0.61	-	0.21	0.62	-	-	0.70
				Hp	-	0.41	0.82	-	0.28	0.83	-	-	0.93
320 Vdc	Rated Torque (speed) ①②⑦⑧⑨⑩		T_{rtd}	Nm	1.12	0.95	-	1.95	1.91	1.45	2.64	2.62	2.27
				lb-in	9.9	8.4	-	17.3	16.9	12.8	23.4	23.2	20.1
	Rated Speed		N_{rtd}	rpm	2500	6000	-	1500	3000	7000	1000	2000	5500
	Rated Power (speed) ①②⑦⑧⑨		P_{rtd}	kW	0.29	0.60	-	0.31	0.6	1.06	0.28	0.55	1.31
				Hp	0.39	0.80	-	0.41	0.80	1.42	0.37	0.74	1.75
560 Vdc	Rated Torque (speed) ①②⑦⑧⑨⑩		T_{rtd}	Nm	1.00	-	-	1.86	1.50	-	2.54	2.34	-
				lb-in	8.9	-	-	16.5	13.3	-	22.5	20.7	-
	Rated Speed		N_{rtd}	rpm	5000	-	-	3000	6500	-	2000	4500	-
	Rated Power (speed) ①②⑦⑧⑨		P_{rtd}	kW	0.52	-	-	0.58	1.02	-	0.53	1.10	-
				Hp	0.70	-	-	0.78	1.37	-	0.71	1.48	-
640 Vdc	Rated Torque (speed) ①②⑦⑧⑨⑩		T_{rtd}	Nm	0.91	-	-	1.83	1.22	-	2.50	2.27	-
				lb-in	8.1	-	-	16.2	10.8	-	22.1	20.1	-
	Rated Speed		N_{rtd}	rpm	6000	-	-	3500	8000	-	2500	5000	-
	Rated Power (speed) ①②⑦⑧⑨		P_{rtd}	kW	0.57	-	-	0.67	1.02	-	0.65	1.19	-
				Hp	0.77	-	-	0.90	1.37	-	0.88	1.59	-

See following page for notes.

AKM3x Performance Data – Up to 640 Vdc (Continued)

Parameters	Tol	Symbol	Units	AKM31 C	AKM31 E	AKM31 H	AKM32 C	AKM32 E	AKM32 H	AKM33 C	AKM33 E	AKM33 H
Torque Constant ①	±10%	K_t	Nm/A_{rms}	0.85	0.41	0.21	1.40	0.73	0.39	1.86	1.10	0.52
			$lb\text{-}in/A_{rms}$	7.5	3.6	1.9	12.4	6.5	3.5	16.5	9.7	4.6
Back EMF Constant ⑥	±10%	K_e	V/k_{rpm}	54.5	26.1	13.7	89.8	47.1	24.8	120	70.6	33.4
Motor Constant	Nom	K_m	$N\text{-}m/\sqrt{W}$	0.150	0.154	0.151	0.235	0.237	0.245	0.295	0.299	0.303
			$lb\text{-}in/\sqrt{W}$	1.33	1.36	1.34	2.08	2.10	2.17	2.61	2.65	2.68
Resistance (line-line) ⑥	±10%	R_m	ohm	21.4	4.74	1.29	23.76	6.32	1.69	26.59	9.01	1.96
Inductance (line-line)		L	mH	37.5	8.6	2.4	46.5	12.8	3.55	53.6	18.5	4.1
Inertia (includes Resolver feedback) ③	±10%	J_m	$kg\text{-}cm^2$	0.33			0.59			0.85		
			$lb\text{-}in\text{-}s^2$	2.9E-04			5.2E-04			7.5E-04		
Optional Brake Inertia (additional)	±10%	J_m	$kg\text{-}cm^2$	0.012			0.012			0.012		
			$lb\text{-}in\text{-}s^2$	1.1E-05			1.1E-05			1.1E-05		
Weight		W	kg	1.55			2.23			2.9		
			lb	3.4			4.9			6.4		
Static Friction ①⑩		T_f	Nm	0.014			0.02			0.026		
			lb-in	0.12			0.18			0.23		
Viscous Damping ①		K_{dv}	Nm/k_{rpm}	0.002			0.003			0.004		
			$lb\text{-}in/k_{rpm}$	0.02			0.03			0.04		
Thermal Time Constant		TCT	minutes	14			17			20		
Thermal Resistance		$R_{thw\text{-}a}$	°C/W	1.11			0.92			0.78		
Pole Pairs				4			4			4		
Heat Sink Size				10"x10"x1/4" Aluminum Plate			10"x10"x1/4" Aluminum Plate			10"x10"x1/4" Aluminum Plate		

Notes:
① Motor winding temperature rise, ΔT=100°C, at 40°C ambient.
② All data referenced to sinusoidal commutation.
③ Add parking brake if applicable for total inertia.
④ Motor with standard heat sink.
⑤ May be limited at some values of Vbus.
⑥ Measured at 25°C.
⑦ Brake motor option reduces continuous torque ratings by:
AKM31 = 0.0 Nm AKM32 = 0.05 Nm AKM33 = 0.1 Nm
⑧ For non-resolver feedback options: no continuous torque reduction.
⑨ Motors with non-resolver feedback and brake option, reduce continuous torque by:
AKM31 = 0.0 Nm AKM32 = 0.1 Nm AKM33 = 0.2 Nm
⑩ For motors with optional shaft seal, reduce torque shown by 0.047 Nm (0.41 lb-in), and increase T_f by the same amount.

Additional Notes: See system data beginning on page 14 for typical torque/speed performance.
Additional windings can be found through our online Motioneering sizing and selection software tool. See page 73 for more information.

AKM4x Outline Drawings

AKM4x Frame

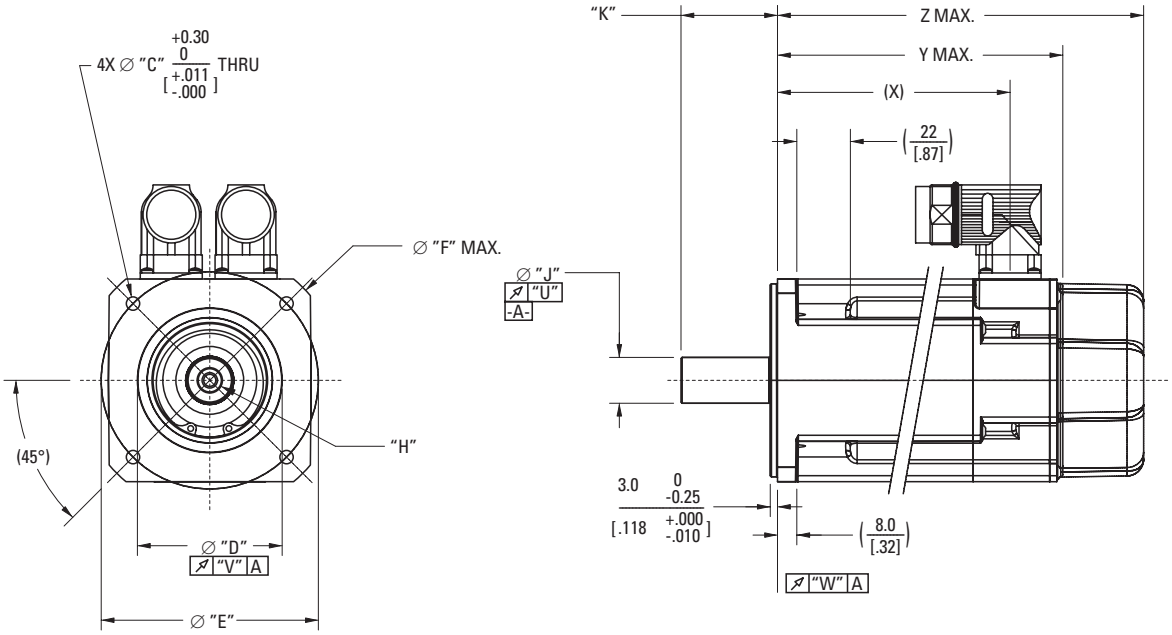

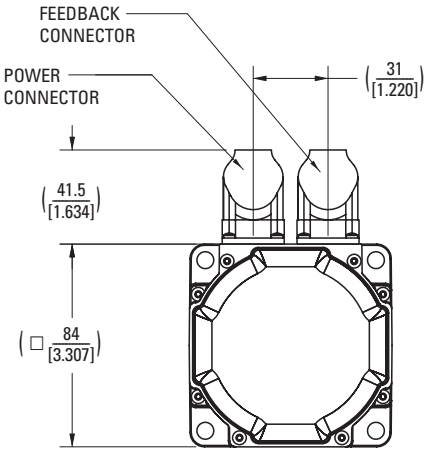

SHOWN WITH "C" CONNECTOR OPTION

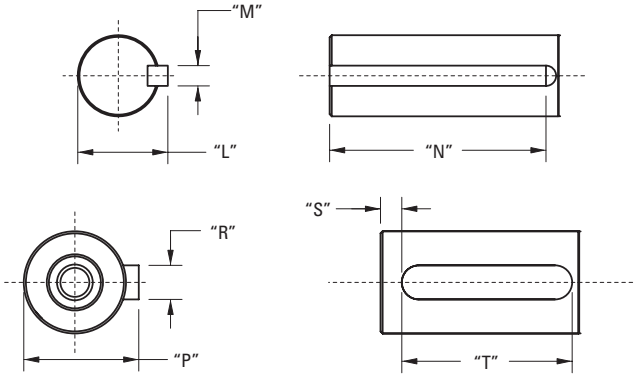

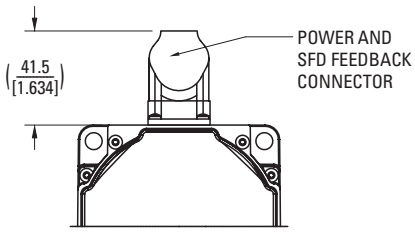

SHOWN WITH "D" CONNECTOR OPTION

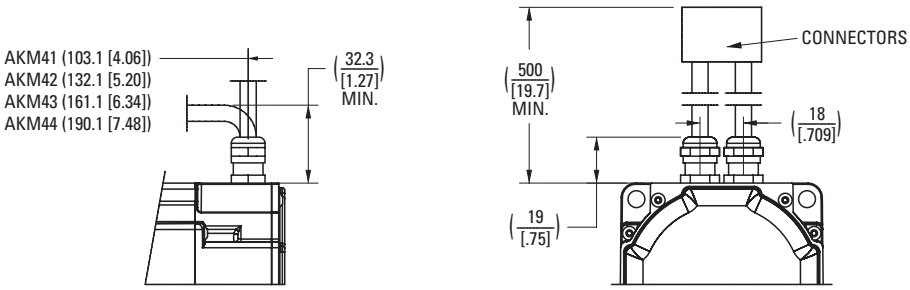

SHOWN WITH "M" OR "P" CONNECTOR OPTION

Notes

AKM4x Dimension Data

AKM4x Dimension Data

Mounting Code	"C"	"D"	"E"	"F"	"H"	"J"	"K"	"L"
AC	7 [.276]	80 +0.012 -0.007 j6 [3.1496 +.0004 -.0002]	100 [3.937]	–	D M6 DIN 332	19 +0.015 +0.002 k6 [.7480 +.0006 +.0001]	40.0 [1.57]	–
AN	7 [.276]	80 +0.012 -0.007 j6 [3.1496 +.0004 -.0002]	100 [3.937]	–	D M6 DIN 332	19 +0.015 +0.002 k6 [.7480 +.0006 +.0001]	40.0 [1.57]	–
BK	5.54 [.218]	73.025 0 -0.051 [2.8750 +.0000 -.0020]	98.43 [3.875]	–	–	15.875 0 -0.013 [.6250 +.0000 -.0005]	52.40 ± 0.79 [2.063 ± .031]	17.92 0 -0.43 [.706 +.000 -.017]
CC	5.54 [.218]	60 +0.012 -0.007 j6 [2.3622 +.0004 -.0002]	90 [3.543]	109 [4.291]	D M6 DIN 332	19 +0.015 +0.002 k6 [.7480] +.0006 +.0001]	40.0 [1.57]	–
CN	5.54 [.218]	60 +0.012 -0.007 j6 [2.3622 +.0004 -.0002]	90 [3.543]	109 [4.291]	D M6 DIN 332	19 +0.015 +0.002 k6 [.7480 +.0006 +.0001]	40.0 [1.57]	–
EK	5.54 [.218]	73.025 0 -0.051 [2.8750 +.0000 -.0020]	98.43 [3.875]	–	–	12.700 0 -0.013 [.5000 +.0000 -.0005]	31.75 ± 0.25 [1.250 ± .010]	14.09 0 -0.43 [.555 +.000 -.017]
GC	7 [.276]	80 +0.012 -0.007 j6 [3.1496 +.0004 -.0002]	100 [3.937]	–	D M6 DIN 332	14 +0.012 +0.001 k6 [.5512 +.0005 +.0000]	30 [1.18]	–
GN	7 [.276]	80 +0.012 -0.007 j6 [3.1496 +.0004 -.0002]	100 [3.937]	–	D M6 DIN 332	14 +0.012 +0.001 k6 [.5512 +.0005 +.0000]	30 [1.18]	–
HC	5.54 [.218]	60 +0.012 -0.007 j6 [2.3622 +.0004 -.0002]	90 [3.543]	109 [4.291]	D M6 DIN 332	14 +0.012 +0.001 k6 [.5512 +.0005 +.0000]	30 [1.18]	–
HN	5.54 [.218]	60 +0.012 -0.007 j6 [2.3622 +.0004 -.0002]	90 [3.543]	109 [4.291]	D M6 DIN 332	14 +0.012 +0.001 k6 [.5512 +.0005 +.0000]	30 [1.18]	–
KK	7 [.276]	70 +0 -0.03 h7 [2.7559 +.0000 -.0012]	90 [3.543]	109 [4.291]	–	16 +0 +0.011 h6 [.6299] +.0000 +.0004]	40.0 [1.57]	–

MODEL	(X)	Y MAX	Z MAX (W/ BRAKE)
AKM41	96.4 [3.80]	118.8 [4.68]	152.3 [6.00]
AKM42	125.4 [4.94]	147.8 [5.82]	181.3 [7.14]
AKM43	154.4 [6.08]	176.8 [6.96]	210.3 [8.28]
AKM44	183.4 [7.22]	205.8 [8.10]	239.3 [9.42]

Note 1: Dimensions are in mm [inches].
Note 2: Product designed in metric. English conversions provided for reference only.

AKM4x Dimension Data

Mounting Code	"M"	"N"	"P"	"R"	"S"	"T"	"U"	"V"	"W"
AC	–	–	$21.5^{0}_{-0.13}$ [$.846^{+.000}_{-.005}$]	$6^{0}_{-0.03}$ N9 [$.236^{+.000}_{-.001}$]	4.00 [1.57]	$32^{0}_{-0.30}$ [$1.260^{+.000}_{-.012}$]	0.040 [.0015]	0.080 [.0031]	0.080 [.0031]
AN	–	–	–	–	–	–	0.040 [.0015]	0.080 [.0031]	0.080 [.0031]
BK	$4.762^{0}_{-0.050}$ [$.1875^{+.0000}_{-.0020}$]	34.93 ± 0.25 [1.375 ± .010]	–	–	–	–	0.051 [.0020]	0.10 [.004]	0.10 [.004]
CC	–	–	$21.5^{0}_{-0.13}$ [$.846^{+.000}_{-.005}$]	$6^{0}_{-0.03}$ N9 [$.236^{+.000}_{-.001}$]	4.00 [1.57]	$32^{0}_{-0.30}$ [$1.260^{+.000}_{-.012}$]	0.040 [.0015]	0.080 [.0031]	0.080 [.0031]
CN	–	–	–	–	–	–	0.040 [.0015]	0.080 [.0031]	0.080 [.0031]
EK	$3.175^{0}_{-0.050}$ [$.1250^{+.0000}_{-.0020}$]	19.05 ± 0.25 [.750 ± .010]	–	–	–	–	0.051 [.0020]	0.10 [.004]	0.10 [.004]
GC	–	–	$16^{0}_{-0.13}$ [$.630^{+.000}_{-.005}$]	$5^{0}_{-0.03}$ N9 [$.197^{+.000}_{-.001}$]	6.00 [.236]	$20^{0}_{-0.20}$ [$.787^{+.000}_{-.008}$]	0.040 [.0015]	0.080 [.0031]	0.080 [.0031]
GN	–	–	–	–	–	–	0.040 [.0015]	0.080 [.0031]	0.080 [.0031]
HC	–	–	$16^{0}_{-0.13}$ [$.630^{+.000}_{-.005}$]	$5^{0}_{-0.03}$ N9 [$.197^{+.000}_{-.001}$]	6.00 [.236]	$20^{0}_{-0.20}$ [$.787^{+.000}_{-.008}$]	0.040 [.0015]	0.080 [.0031]	0.080 [.0031]
HN	–	–	–	–	–	–	0.040 [.0015]	0.080 [.0031]	0.080 [.0031]
KK	$5^{0}_{-0.03}$ [$.197^{+.0000}_{-.001}$]	$30^{0}_{-0.20}$ [$1.181^{+.000}_{-.008}$]	–	–	–	–	0.051 [.0020]	0.008 [.0031]	0.008 [.0031]

AKM4x Performance Data

AKM4x Perfomance Data – Up to 640 Vdc

					AKM41			AKM42				AKM43			AKM44		
	Parameters	Tol	Sym	Units	C	E	H	C	E	G	J	E	H	L	E	H	J
	Max Rated DC Bus Voltage	Max	Vbus	Vdc	640	640	320	640	640	640	320	640	640	320	640	640	640
	Continuous Torque (Stall) for ΔT winding = 100°C ①②⑦⑧⑨	Nom	T_{cs}	Nm	1.95	2.02	2.06	3.35	3.42	3.53	3.56	4.70	4.82	4.73	5.76	5.89	6.00
				lb-in	17.3	17.9	18.2	29.6	30.3	31.2	31.5	41.6	42.7	41.9	51.0	52.1	53.1
	Continuous Current (Stall) for ΔT winding = 100°C ①②⑦⑧⑨	Nom	I_{cs}	A_{rms}	1.46	2.85	5.60	1.40	2.74	4.80	8.40	2.76	5.4	11.2	2.9	5.6	8.8
	Continuous Torque (Stall) for ΔT winding = 60°C ②	Nom	T_{cs}	Nm	1.56	1.62	1.65	2.68	2.74	2.82	2.85	3.76	3.86	3.78	4.61	4.71	4.80
				lb-in	13.8	14.3	14.6	23.7	24.2	25.0	25.2	33.3	34.2	33.5	40.8	41.7	42.5
	Max Mechanical Speed ⑤	Nom	N_{max}	rpm	6000	6000	6000	6000	6000	6000	6000	6000	6000	6000	6000	6000	6000
	Peak Torque ①②	Nom	T_p	Nm	6.12	6.28	6.36	11.1	11.3	11.5	11.6	15.9	16.1	16.0	19.9	20.2	20.4
				lb-in	54.2	55.6	56.3	98.2	99.7	102	103	141	142	142	176	179	181
	Peak Current	Nom	I_p	A_{rms}	5.8	11.4	22.4	5.60	11.0	19.2	33.7	11.0	21.6	44.6	11.4	22.4	35.2
75 Vdc	Rated Torque (speed) ①②⑦⑧⑨⑩		T_{rtd}	Nm	-	-	1.99	-	-	-	-	-	-	-	-	-	-
				lb-in	-	-	17.6	-	-	-	-	-	-	-	-	-	-
	Rated Speed		N_{rtd}	rpm	-	-	1000	-	-	-	-	-	-	-	-	-	-
	Rated Power (speed) ①②⑦⑧⑨		P_{rtd}	kW	-	-	0.21	-	-	-	-	-	-	-	-	-	-
				Hp	-	-	0.28	-	-	-	-	-	-	-	-	-	-
160 Vdc	Rated Torque (speed) ①②⑦⑧⑨⑩		T_{rtd}	Nm	-	1.94	1.86	-	-	-	3.03	-	4.46	3.78	-	5.44	-
				lb-in	-	17.2	16.5	-	-	-	26.8	-	39.4	33.5	-	48.2	-
	Rated Speed		N_{rtd}	rpm	-	1200	3000	-	-	-	3000	-	1200	3000	-	1000	-
	Rated Power (speed) ①②⑦⑧⑨		P_{rtd}	kW	-	0.24	0.58	-	-	-	0.95	-	0.56	1.19	-	0.57	-
				Hp	-	0.33	0.78	-	-	-	1.28	-	0.75	1.59	-	0.76	-
320 Vdc	Rated Torque (speed) ①②⑦⑧⑨⑩		T_{rtd}	Nm	1.88	1.82	1.62	-	3.12	2.90	2.38	4.24	3.86	2.53	5.22	4.66	3.84
				lb-in	16.6	16.1	14.3	-	27.6	25.7	21.1	37.5	34.2	22.4	46.2	41.2	34.0
	Rated Speed		N_{rtd}	rpm	1200	3000	6000	-	1800	3500	6000	1500	3000	6000	1200	2500	4000
	Rated Power (speed) ①②⑦⑧⑨		P_{rtd}	kW	0.24	0.57	1.02	-	0.59	1.06	1.50	0.67	1.21	1.59	0.66	1.22	1.61
				Hp	0.32	0.77	1.36	-	0.79	1.42	2.00	0.89	1.63	2.13	0.88	1.64	2.16
560 Vdc	Rated Torque (speed) ①②⑦⑧⑨⑩		T_{rtd}	Nm	1.77	1.58	-	3.10	2.81	2.35	-	3.92	2.81	-	4.80	3.48	2.75
				lb-in	15.7	14.0	-	27.4	24.9	20.8	-	34.7	24.9	-	42.5	30.8	24.3
	Rated Speed		N_{rtd}	rpm	3000	6000	-	1500	3500	6000	-	2500	5500	-	2000	4500	6000
	Rated Power (speed) ①②⑦⑧⑨		P_{rtd}	kW	0.56	0.99	-	0.49	1.03	1.48	-	1.03	1.62	-	1.01	1.64	1.73
				Hp	0.75	1.33	-	0.65	1.38	1.98	-	1.38	2.17	-	1.35	2.20	2.32
640 Vdc	Rated Torque (speed) ①②⑦⑧⑨⑩		T_{rtd}	Nm	1.74	1.58	-	3.02	2.72	2.35	-	3.76	2.58	-	4.56	2.93	2.75
				lb-in	15.4	14.0	-	26.7	24.1	20.8	-	33.3	22.8	-	40.4	26.0	24.3
	Rated Speed		N_{rtd}	rpm	3500	6000	-	2000	4000	6000	-	3000	6000	-	2500	5500	6000
	Rated Power (speed) ①②⑦⑧⑨		P_{rtd}	kW	0.64	0.99	-	0.63	1.14	1.48	-	1.18	1.62	-	1.19	1.69	1.73
				Hp	0.85	1.33	-	0.85	1.53	1.98	-	1.58	2.17	-	1.60	2.27	2.32

See following page for notes.

AKM4x Perfomance Data – Up to 640 Vdc (Continued)

				AKM41			AKM42				AKM43			AKM44		
Parameters	Tol	Sym	Units	C	E	H	C	E	G	J	E	H	L	E	H	J
Torque Constant ①	±10%	K_t	Nm/A_{rms}	1.34	0.71	0.37	2.40	1.26	0.74	0.43	1.72	0.89	0.43	2.04	1.06	0.69
			lb-in/ A_{rms}	11.9	6.3	3.3	21.2	11.2	6.5	3.8	15.2	7.9	3.8	18.1	9.4	6.1
Back EMF Constant ⑥	±10%	K_e	V/k_{rpm}	86.3	45.6	23.7	154	80.9	47.5	27.5	111	57.4	27.5	132	68.0	44.2
Motor Constant	Nom	K_m	N-m/√W	0.237	0.236	0.242	0.374	0.369	0.381	0.393	0.479	0.501	0.465	0.567	0.580	0.581
			lb-in/√W	2.10	2.09	2.14	3.31	3.26	3.37	3.47	4.24	4.44	4.12	5.01	5.13	5.14
Resistance (line-line) ⑥	±10%	R_m	ohm	21.3	6.02	1.56	27.5	7.78	2.51	0.8	8.61	2.1	0.57	8.64	2.23	0.94
Inductance (line-line)		L	mH	66.1	18.4	5.0	97.4	26.8	9.2	3.1	32.6	8.8	2.0	33.9	9.1	3.8
Inertia (includes Resolver feedback) ③	±10%	J_m	$kg\text{-}cm^2$	0.81			1.5				2.1			2.7		
			$lb\text{-}in\text{-}s^2$	7.2E-04			1.3E-03				1.8E-03			2.4E-03		
Optional Brake Inertia (additional)	±10%	J_m	$kg\text{-}cm^2$	0.068			0.068				0.068			0.068		
			$lb\text{-}in\text{-}s^2$	6.0E-05			6.0E-05				6.0E-05			6.0E-05		
Weight		W	kg	2.44			3.39				4.35			5.3		
			lb	5.4			7.5				9.6			11.7		
Static Friction ①⑩		T_f	Nm	0.014			0.026				0.038			0.05		
			lb-in	0.12			0.23				0.34			0.44		
Viscous Damping ①		K_{dv}	Nm/k_{rpm}	0.009			0.013				0.017			0.021		
			lb-in/ k_{rpm}	0.08			0.12				0.15			0.19		
Thermal Time Constant		TCT	minutes	13			17				20			24		
Thermal Resistance		$R_{thw\text{-}a}$	°C/W	0.97			0.80				0.70			.65		
Pole Pairs				5			5				5			5		
Heat Sink Size				10"x10"x1/4" Aluminum Plate			10"x10"x1/4" Aluminum Plate				10"x10"x1/4" Aluminum Plate			10"x10"x1/4" Aluminum Plate		

Notes:
① Motor winding temperature rise, ΔT=100°C, at 40°C ambient.
② All data referenced to sinusoidal commutation.
③ Add parking brake if applicable for total inertia.
④ Motor with standard heat sink.
⑤ May be limited at some values of Vbus.
⑥ Measured at 25°C.
⑦ Brake motor option reduces continuous torque ratings by 0.12 Nm.
⑧ Non-Resolver feedback options reduces continuous ratings by:
AKM41 = 0.1 Nm AKM42 = 0.1 Nm AKM43 = 0.2 Nm AKM44 = 0.3 Nm
⑨ Motors with non-resolver feedback and brake option, reduce continuous torque by:
AKM41 = 0.22 Nm AKM42 = 0.36 Nm AKM43 = 0.55 Nm AKM44 = 0.76 Nm
⑩ For motors with optional shaft seal, reduce torque shown by 0.071 Nm (0.63 lb-in), and increase T_f by the same amount.

Additional Notes: See system data beginning on page 14 for typical torque/speed performance.
Additional windings can be found through our online Motioneering sizing and selection software tool. See page 73 for more information.

AKM5x Outline Drawings

AKM5x Frame

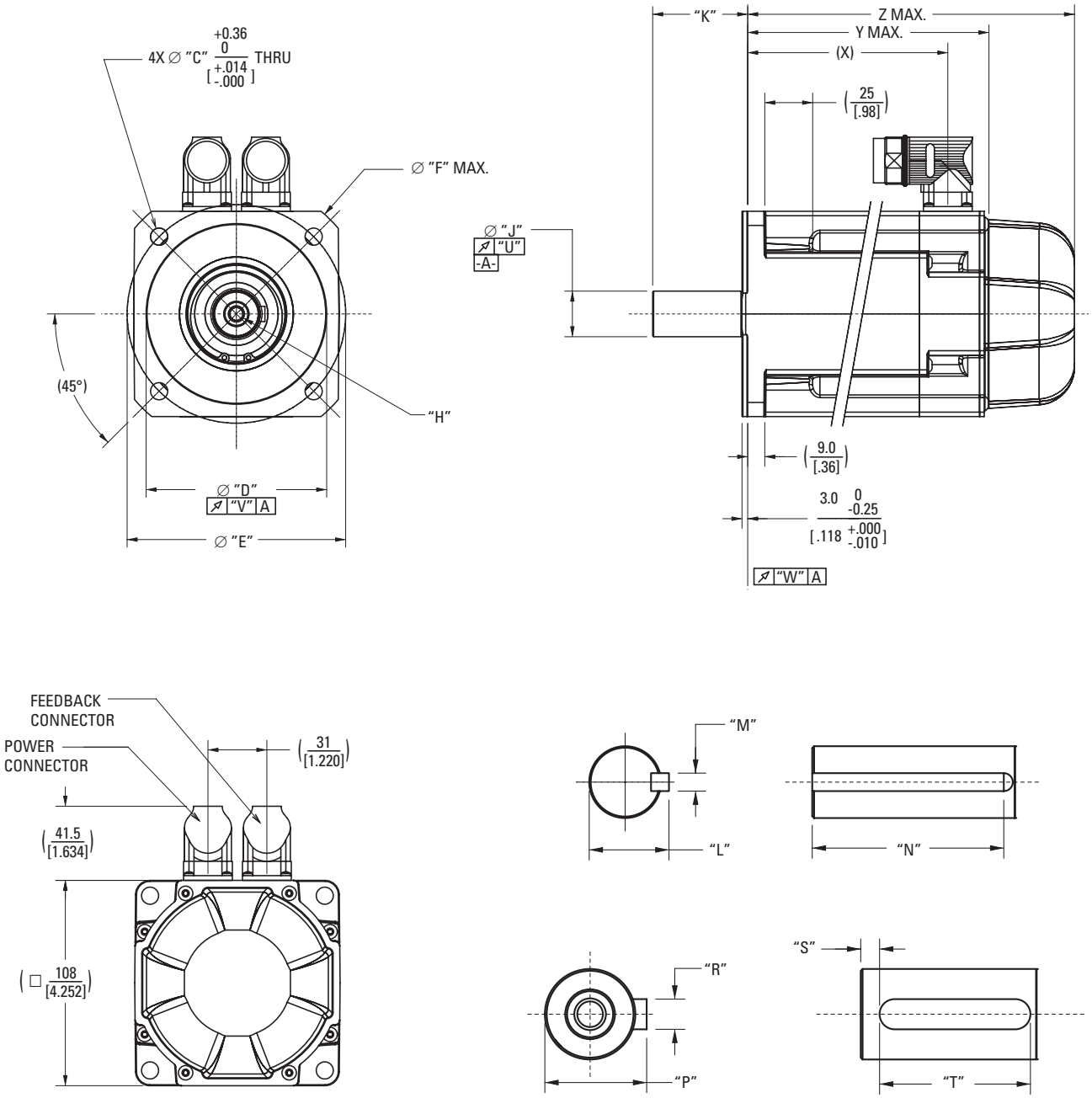

AKM5x Dimension Data

AKM5x Dimension Data

Mounting Code	"C"	"D"	"E"	"F"	"H"	"J"	"K"	"L"
AC	9 [.354]	110 +0.013 -0.009 j6 [4.3307 +.0005 -.0003]	130 [5.118]	–	D M8 DIN 332	24 +0.015 +0.002 k6 [.9449 +.0006 +.0001]	[50.0] 1.97]	–
AN	9 [354]	110 +0.013 -0.009 j6 [4.3307 +.0005 -.0003]	130 [5.118]	–	D M8 DIN 332	24 +0.015 +0.002 k6 [.9449 +.0006 +.0001]	50.0 [1.97]	–
BK	8.33 [.328]	55.563 0 -0.051 [2.1874 +.0000 -.0020]	125.73 [4.950]	–	–	19.05 0 +0.013 [.7500 +.0000 +.0005]	57.15 ± 0.79 [2.250 ± .031]	21.15 0 -0.43 [.83 +.000 -.017]
CC	9 [.354]	95 +0.013 -0.009 j6 [3.7402 +.0005 -.0003]	115 [4.528]	140 [5.512]	D M8 DIN 332	24 +0.015 +0.002 k6 [.9449 +.0006 +.0001]	50.0 [1.97]	–
CN	9 [.354]	95 +0.013 -0.009 j6 [3.7402 +.0005 -.0003	115 [4.528]	140 [5.512]	D M8 DIN 332	24 +0.015 +0.002 k6 [.9449 +.0006 +.0001]	50.0 [1.97]	–
DK	8.33 [.328]	63.5 0 -0.05 [2.500 +.000 -.002]	127 [5.000]	–	–	19.05 +0 +0.013 [.7500 +.0000 +.0005]	57.15 ± 0.79 [2.250 ± .031]	21.15 0 -0.43 [.83 +.000 -.017]
EK	8.33 [.328]	55.563 0 -0.051 [2.1874 +.0000 -.0020]	125.73 [4.950]	–	–	15.875 0 +0.013 [.6250 +.0000 +.0005]	44.45 [1.750]	17.91 0 -0.43 [.705 +.000 -.017]
GC	9 [.354]	110 +0.013 -0.009 j6 [4.3307 +.0005 -.0003]	130 [5.118]	–	D M6 DIN 332	19 +0.015 +0.002 k6 [.7480 +.0006 +.0001]	40 [1.57]	–
GN	9 [354]	110 +0.013 -0.009 j6 [4.3307 +.0005 -.0003]	130 [5.118]	–	D M6 DIN 332	19 +0.015 +0.002 k6 [.7480 +.0006 +.0001]	40.0 [1.57]	–
HC	9 [.354]	95 +0.013 -0.009 j6 [3.7402 +.0005 -.0003	115 [4.528]	140 [5.512]	D M6 DIN 332	19 +0.015 +0.002 k6 [.7480 +.0006 +.0001]	40 [1.57]	–
HN	9 [354]	95 +0.013 -0.009 j6 [3.7402 +.0005 -.0003	115 [4.528]	140 [5.512]	D M6 DIN 332	19 +0.015 +0.002 k6 [.7480 +.0006 +.0001]	40.0 [1.57]	–

Continued on the following page

MODEL	Z MAX SINE ENCODER (NO BRAKE)	Z MAX SINE ENCODER (W/ BRAKE)	(X)	Y MAX	Z MAX (W/ BRAKE)
AKM51	146.0 [5.75]	189.0 [7.44]	105.3 [4.15]	127.5 [5.02]	172.5 [6.79]
AKM52	177.0 [6.97]	220.0 [8.66]	136.3 [5.37]	158.5 [6.24]	203.5 [8.01]
AKM53	208.0 [8.19]	251.0 [9.88]	167.3 [6.59]	189.5 [7.46]	234.5 [9.23]
AKM54	239.0 [9.41]	282.0 [11.10]	198.3 [7.81]	220.5 [8.68]	265.5 [10.45]

Note 1: Dimensions are in mm [inches].
Note 2: Product designed in metric. English conversions provided for reference only.

AKM5x Dimension Data

AKM5x Dimension Data (continued)

Mounting Code	"M"	"N"	"P"	"R"	"S"	"T"	"U"	"V"	"W"
AC	–	–	27 $^{0}_{-0.29}$ [1.063 $^{+.000}_{-.001}$]	8 $^{0}_{-0.036}$ N9 [.3150 $^{+.0000}_{-.0014}$]	5.00 [1.97]	40 $^{0}_{-0.30}$ [1.575 $^{+.000}_{-.012}$]	0.040 [.0015]	0.100 [.0039]	0.100 [.0039]
AN	–	–	–	–	–	–	0.040 [.0015]	0.100 [.0039]	0.100 [.0039]
BK	4.763 $^{0}_{-0.050}$ [.1875 $^{+.0000}_{-.0020}$]	38.1 ± 0.25 [1.500 ± .010]	–	–	–	–	0.051 [.0020]	0.10 [.004]	0.10 [.004]
CC	–	–	27 $^{0}_{-0.29}$ [1.063 $^{+.000}_{-.011}$]	8 $^{0}_{-0.036}$ N9 [.3150 $^{+.0000}_{-.0014}$]	5.00 [1.97]	40 $^{0}_{-0.30}$ [1.575 $^{+.000}_{-.012}$]	0.040 [.0015]	0.080 [.0031]	0.080 [.0031]
CN	–	–	–	–	–	–	0.040 [.0015]	0.080 [.0031]	0.080 [.0031]
DK	4.763 $^{0}_{-0.050}$ [.1875 $^{+.0000}_{-.0020}$]	34.93 ± 0.25 [1.375 ± .010]	–	–	–	–	0.051 [.0020]	0.05 [.002]	0.10 [.004]
EK	4.763 $^{0}_{-0.050}$ [.1875 $^{+.0000}_{-.0020}$]	38.1 ± 0.25 [1.500 ± .010]	–	–	–	–	0.051 [.0020]	0.10 [.004]	0.10 [.004]
GC	–	–	21.5 $^{0}_{-0.13}$ [.846 $^{+.000}_{-.005}$]	6 $^{0}_{-0.03}$ N9 [.236 $^{+.000}_{-.001}$]	4.00 [.157]	32 $^{0}_{-0.30}$ [1.260 $^{+.000}_{-.012}$]	0.040 [.0015]	0.080 [.0031]	0.080 [.0031]
GN	–	–	–	–	–	–	–	–	–
HC	–	–	21.5 $^{0}_{-0.13}$ [.846 $^{+.000}_{-.005}$]	6 $^{0}_{-0.03}$ N9 [.236 $^{+.000}_{-.001}$]	4.00 [.157]	32 $^{0}_{-0.30}$ [1.260 $^{+.000}_{-.012}$]	0.040 [.0015]	0.080 [.0031]	0.080 [.0031]
HN	–	–	–	–	–	–	–	–	–

Notes

AKM5x Performance Data

AKM5x Performance Data – Up to 640 Vdc

					AKM51			AKM52				AKM53				AKM54			
	Parameters	Tol	Sym	Units	E	H	L	E	H	L	M	G	H	L	P	H	K	L	N
	Max Rated DC Bus Voltage	Max	Vbus	Vdc	640	640	320	640	640	640	320	640	640	640	320	640	640	560	320
	Continuous Torque (Stall) for ΔT winding = 100°C ①②⑦⑧⑨	Nom	T_{cs}	Nm	4.70	4.79	4.89	8.34	8.48	8.67	8.60	11.4	11.5	11.6	11.4	14.2	14.4	14.1	14.1
				lb-in	41.6	42.4	43.3	73.8	75.1	76.7	76.1	101	102	103	101	126	127	125	125
	Continuous Current (Stall) for ΔT winding = 100°C ①②⑦⑧⑨	Nom	I_{cs}	A_{rms}	2.75	6.0	11.9	2.99	5.9	11.6	13.1	4.77	6.6	11.8	19.1	5.5	9.7	12.5	17.8
	Continuous Torque (Stall) for ΔT winding = 60°C ②	Nom	T_{cs}	Nm	3.76	3.83	3.91	6.67	6.78	6.94	6.88	9.10	9.21	9.28	9.10	11.5	11.5	11.3	11.3
				lb-in	33.3	33.9	34.6	59.0	60.0	61.4	61.0	80.5	81.5	82.1	80.5	102	102	100	100
	Max Mechanical Speed ⑤	Nom	N_{max}	rpm	6000	6000	6000	6000	6000	6000	6000	6000	6000	6000	6000	6000	6000	6000	6000
	Peak Torque ①②	Nom	T_p	Nm	11.6	11.7	12.0	21.3	21.6	22.0	21.9	29.7	30.0	30.3	29.8	37.5	38.4	37.5	37.6
				lb-in	103	104	106	189	191	195	194	263	266	268	264	332	340	332	333
	Peak Current	Nom	I_p	A_{rms}	8.24	18.0	35.7	9.00	17.7	34.8	39.4	14.3	19.8	35.4	57.4	16.5	29.2	37.5	53.4
75 Vdc	Rated Torque (speed) ①②⑦⑧⑨⑩		T_{rtd}	Nm	-	-	-	-	-	-	-	-	-	-	-	-	-	-	-
				lb-in	-	-	-	-	-	-	-	-	-	-	-	-	-	-	-
	Rated Speed		N_{rtd}	rpm	-	-	-	-	-	-	-	-	-	-	-	-	-	-	-
	Rated Power (speed) ①②⑦⑧⑨		P_{rtd}	kW	-	-	-	-	-	-	-	-	-	-	-	-	-	-	-
				Hp	-	-	-	-	-	-	-	-	-	-	-	-	-	-	-
160 Vdc	Rated Torque (speed) ①②⑦⑧⑨⑩		T_{rtd}	Nm	-	4.46	3.95	-	-	7.89	-	-	-	13.0	-	-	-	-	-
				lb-in	-	39.4	35.0	-	-	69.9	-	-	-	115	-	-	-	-	-
	Rated Speed		N_{rtd}	rpm	-	1200	3000	-	-	1500	-	-	-	1200	-	-	-	-	-
	Rated Power (speed) ①②⑦⑧⑨		P_{rtd}	kW	-	0.56	1.24	-	-	1.24	-	-	-	1.63	-	-	-	-	-
				Hp	-	0.75	1.66	-	-	1.66	-	-	-	2.18	-	-	-	-	-
320 Vdc	Rated Torque (speed) ①②⑦⑧⑨⑩		T_{rtd}	Nm	4.41	3.87	2.00	-	7.53	6.40	5.20	10.7	10.5	9.59	5.88	13.4	12.7	11.5	9.85
				lb-in	39.0	34.3	17.7	-	66.6	56.6	46.0	94.5	93.0	84.9	52.0	118	112	102	87.2
	Rated Speed		N_{rtd}	rpm	1200	3000	6000	-	1800	3500	4500	1000	1500	2500	5000	1000	1800	2500	3500
	Rated Power (speed) ①②⑦⑧⑨		P_{rtd}	kW	0.55	1.22	1.26	-	1.42	2.35	2.45	1.12	1.65	2.51	3.08	1.4	2.39	3.00	3.61
				Hp	0.74	1.63	1.69	-	1.90	3.15	3.28	1.50	2.21	3.36	4.13	1.87	3.20	4.03	4.84
560 Vdc	Rated Torque (speed) ①②⑦⑧⑨⑩		T_{rtd}	Nm	3.98	1.97	-	7.61	6.26	3.27	-	9.85	8.83	6.00	-	12.6	10.05	8.13	-
				lb-in	35.2	17.4	-	67.3	55.4	2.89	-	87.2	78.2	53.1	-	112	88.9	72.0	-
	Rated Speed		N_{rtd}	rpm	2500	6000	-	1500	3500	6000	-	2000	3000	5000	-	1800	3500	4500	-
	Rated Power (speed) ①②⑦⑧⑨		P_{rtd}	kW	1.04	1.24	-	1.20	2.30	2.06	-	2.06	2.77	3.14	-	2.38	3.68	3.83	-
				Hp	1.40	1.66	-	1.60	3.08	2.76	-	2.77	3.72	4.21	-	3.18	4.94	5.14	-
640 Vdc	Rated Torque (speed) ①②⑦⑧⑨⑩		T_{rtd}	Nm	3.80	1.97	-	7.28	5.77	3.27	-	9.50	8.82	4.05	-	12.2	9.25	-	-
				lb-in	33.6	17.4	-	64.4	51.1	28.9	-	84.0	78.0	35.8	-	108	81.9	-	-
	Rated Speed		N_{rtd}	rpm	3000	6000	-	2000	4000	6000	-	2400	3000	6000	-	2000	4000	-	-
	Rated Power (speed) ①②⑦⑧⑨		P_{rtd}	kW	1.19	1.24	-	1.52	2.42	2.06	-	2.39	2.77	2.55	-	2.56	3.87	-	-
				Hp	1.60	1.66	-	20.4	3.24	2.76	-	3.20	3.71	3.41	-	3.43	5.19	-	-

See following page for notes.

AKM5x Performance Data – Up to 640 Vdc (Continued)

				AKM51			AKM52				AKM53				AKM54			
Parameters	Tol	Sym	Units	E	H	L	E	H	L	M	G	H	L	P	H	K	L	N
Torque Constant ①	±10%	K_t	Nm/ A_{rms}	1.72	0.80	0.41	2.79	1.44	0.75	0.66	2.39	1.75	0.99	0.60	2.6	1.50	1.13	0.80
			lb-in/ A_{rms}	15.2	7.1	3.6	24.7	12.7	6.6	5.8	21.2	15.5	8.8	5.3	22.7	13.3	10.0	7.1
Back EMF Constant ⑥	±10%	K_e	V/k_{rpm}	110	51.3	26.6	179	92.7	48.3	42.4	154	112	63.6	38.4	166	96.6	72.9	51.3
Motor Constant	Nom	K_m	N-m/√W	0.469	0.465	0.447	0.761	0.767	0.784	0.770	0.979	0.986	0.973	0.926	1.19	1.18	1.14	1.14
			lb-in/√W	4.15	4.12	3.96	6.73	6.79	6.94	6.81	8.67	8.73	8.61	8.19	10.5	10.4	10.1	10.1
Resistance (line-line) ⑥	±10%	R_m	ohm	8.98	1.97	0.56	8.96	2.35	0.61	0.49	3.97	2.1	0.69	0.28	3.2	1.08	0.65	0.33
Inductance (line-line)		L	mH	36.6	7.9	2.1	44.7	11.9	3.24	2.5	21.3	11.4	3.64	1.3	18.3	6.2	3.5	1.8
Inertia (includes Resolver feedback) ③	±10%	J_m	kg-cm²	3.4			6.2				9.1				12			
			lb-in-s²	3.0E-03			5.5E-03				8.1E-03				0.011			
Optional Brake Inertia (additional)	±10%	J_m	kg-cm²	0.17			0.17				0.17				0.17			
			lb-in-s²	1.5E-04			1.5E-04				1.5E-04				1.5E-04			
Weight		W	kg	4.2			5.8				7.4				9			
			lb	9.3			12.8				16.3				19.8			
Static Friction ①⑩		T_f	Nm	0.022			0.04				0.058				0.077			
			lb-in	0.19			0.35				0.51				0.68			
Viscous Damping ①		K_{dv}	Nm/ k_{rpm}	0.033			0.042				0.052				0.061			
			lb-in/ k_{rpm}	0.29			0.37				0.46				0.54			
Thermal Time Constant		TCT	minutes	20			24				28				31			
Thermal Resistance		R_{thw-a}	°C/W	0.68			0.56				0.50				0.45			
Pole Pairs				5			5				5				5			
Heat Sink Size				12"x12"x1/2" Aluminum Plate			12"x12"x1/2" Aluminum Plate				12"x12"x1/2" Aluminum Plate				12"x12"x1/2" Aluminum Plate			

Notes:
① Motor winding temperature rise, ΔT=100°C, at 40°C ambient.
② All data referenced to sinusoidal commutation.
③ Add parking brake if applicable for total inertia.
④ Motor with standard heat sink.
⑤ May be limited at some values of Vbus.
⑥ Measured at 25°C.
⑦ Brake motor option reduces continuous torque ratings by:
AKM51 = 0.15 Nm AKM52 = 0.26 Nm AKM53 = 0.35 Nm AKM54 = 0.43 Nm
⑧ Non-Resolver feedback options reduce continuous torque ratings by:
AKM51 = 0.15 Nm AKM52 = 0.34 Nm AKM53 = 0.58 Nm AKM54 = 0.86 Nm
⑨ Motors with non-resolver feedback and brake option, reduce continuous torque by:
AKM51 = 0.39 Nm AKM52 = 0.76 Nm AKM53 = 1.13 Nm AKM54 = 1.55 Nm
⑩ For motors with optional shaft seal, reduce torque shown by 0.013 Nm (0.1.2 lb-in), and increase T_f by the same amount.

Additional Notes: See system data beginning on page 14 for typical torque/speed performance.
Additional windings can be found through our online Motioneering sizing and selection software tool. See page 73 for more information.

AKM6x Outline Drawings

AKM6x Frame

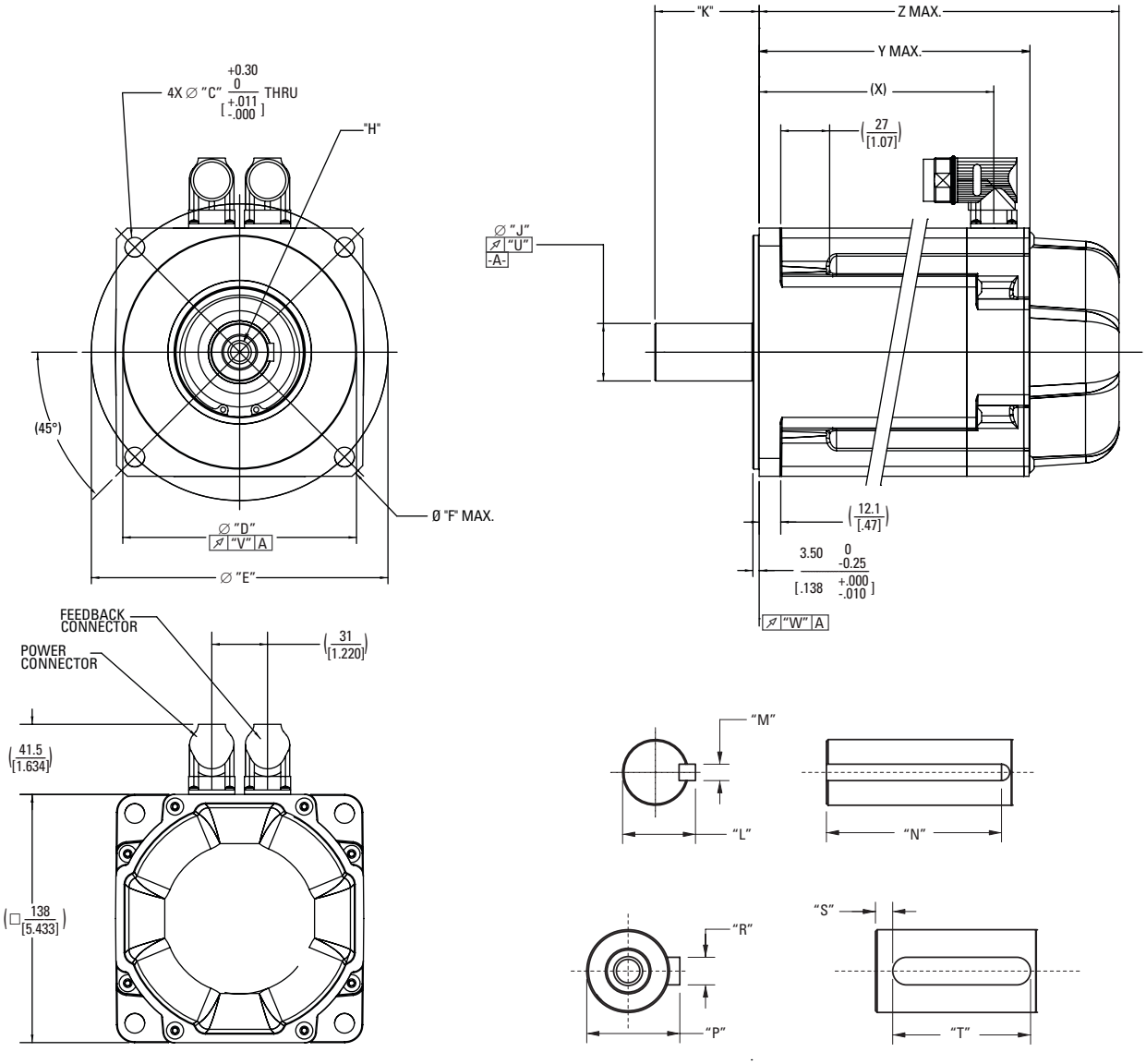

AKM6x Dimension Data

AKM6x Dimension Data

Mounting Code	"C"	"D"	"E"	"F"	"H"	"J"	"K"	"L"
AC	11.00 [.433]	130 +0.014 -0.011 [5.1181 +.0005 -.0004] j6	165.00 [6.496]	–	D M12 DIN 332	32 +0.018 +0.002 [1.2598 +.0007 +.0001] k6	58 [2.28]	–
AN	11.00 [.433]	130 +0.014 -0.011 [5.1181 +.0005 -.0004] j6	165.00 [6.496]	–	D M12 DIN 332	32 +0.018 +0.002 [1.2598 +.0007 +.0001] k6	58 [2.28]	–
GC	11.00 [.433]	130 +0.014 -0.011 [5.1181 +.0005 -.0004] j6	165.00 [6.496]	–	D M8 DIN 332	24 +0.015 +0.002 [.9449 +.0006 +.0001] k6	50 [1.97]	–
GN	11.00 [.433]	130 +0.014 -0.011 [5.1181 +.0005 -.0004] j6	165.00 [6.496]	–	D M8 DIN 332	24 +0.015 +0.002 [.9449 +.0006 +.0001] k6	50 [1.97]	–
KK	9.00 [.354]	110 0 -0.035 [4.3307 +.0000 -.0013] h7	145.00 [5.709]	165 [6.496]	–	28 +0 +0.013 [1.1024 +.0000 +.0005] h6	60 [2.36]	31 0 -0.29 [1.220 +.000 -.011]
LK	3/18 - 16 UNC-2B	114.3 0 -0.076 [4.5000 +.0000 -.0030]	149.225 [5.875]	165 [6.496]	–	28.580 0 +0.013 [1.1250 +.0000 +.0005]	69.85 [2.75]	31.39 0 -0.43 [1.236 +.000 -.017]

Mounting Code	"M"	"N"	"P"	"R"	"S"	"T"	"U"	"V"	"W"
AC	–	–	35 0 -0.29 [1.378 +.000 -.001]	10 0 -0.036 [.3937 +.0000 -.0014] N9	5.00 [.197]	45 0 -0.30 [1.772 +.000 -.012]	0.050 [.0019]	0.100 [.0039]	0.100 [.0039]
AN	–	–	–	–	–	–	0.050 [.0019]	0.100 [.0039]	0.100 [.0039]
GC	–	–	27 0 -0.29 [1.063 +.000 -.001]	8 0 -0.036 [.3150 +.0000 -.0014] N9	5.00 [.197]	40 0 -0.30 [1.575 +.000 -.012]	0.050 [.0019]	0.100 [.0039]	0.100 [.0039]
GN	–	–	–	–	–	–	0.050 [.0019]	0.100 [.0039]	0.100 [.0039]
KK	8 0 -0.036 [.3150 +.0000 -.0014]	50 0 -0.30 [1.969 +.000 -.12]	–	–	–	–	0.050 [.0019]	0.100 [.0039]	0.100 [.0039]
LK	6.35 0 -0.05 [2.75 +.000 -.002]	38.1 ± 0.25 [1.500 ± .010]	–	–	–	–	0.050 [.0019]	0.100 [.0039]	0.100 [.0039]

MODEL	Z MAX SINE ENCODER (NO BRAKE)	Z MAX SINE ENCODER (W/ BRAKE)	(X)	Y MAX	Z MAX (W/ BRAKE)
AKM62	172.2 [6.78]	218.7 [8.85]	130.5 [5.14]	153.7 [6.05]	200.7 [7.90]
AKM63	197.2 [7.76]	224.7 [9.63]	155.5 [6.12]	178.7 [7.04]	225.7 [8.89]
AKM64	222.2 [8.75]	268.7 [10.62]	180.5 [7.11]	203.7 [8.02]	250.7 [9.87]
AKM65	247.2 [9.73]	294.7 [11.60]	205.5 [8.09]	228.7 [9.00]	275.7 [10.85]

Note 1: Dimensions are in mm [inches].
Note 2: Product designed in metric. English conversions provided for reference only.

AKM6x Performance Data

AKM6x Performance Data – Up to 640 Vdc

					AKM62				AKM63				AKM64			AKM65		
	Parameters	Tol	Sym	Units	H	L	M	Q	H	L	M	Q	K	L	Q	L	M	P
	Max Rated DC Bus Voltage	Max	Vbus	Vdc	640	640	640	320	640	640	640	320	640	640	640	640	640	640
	Continuous Torque (Stall) for ΔT winding = 100°C ①②⑦⑧⑨	Nom	T_{cs}	Nm	11.9	12.2	12.2	12.0	16.6	16.8	17.0	16.7	20.8	21.0	20.6	25	25.0	24.5
				lb-in	105	108	108	106	147	149	150	148	184	186	182	221	221	217
	Continuous Current (Stall) for ΔT winding = 100°C ①②⑦⑧⑨	Nom	I_{cs}	A_{rms}	5.4	12.0	13.4	21.8	5.6	11.1	13.8	22.4	9.2	12.8	20.7	12.2	13.6	19.8
	Continuous Torque (Stall) for ΔT winding = 60°C ②	Nom	T_{cs}	Nm	9.5	9.8	9.72	9.6	13.3	13.4	13.6	13.4	16.6	16.8	16	20	20.0	19.6
				lb-in	84	87	86.0	85	118	119	120	119	147	149	142	177	177	173
	Max Mechanical Speed ⑤	Nom	N_{max}	rpm	6000	6000	6000	6000	6000	6000	6000	6000	6000	6000	6000	6000	6000	6000
	Peak Torque ①②	Nom	T_p	Nm	29.6	30.1	30.2	29.8	42.1	42.6	43.0	42.4	53.5	54.1	53.2	65.2	65.2	65.2
				lb-in	262	266	267	264	373	377	381	374	473	479	471	577	577	577
	Peak Current	Nom	I_p	A_{rms}	16.2	36.0	40.3	65.4	16.8	33.3	41.4	67.2	27.5	38.4	62.1	36.6	40.9	59.4
75 Vdc	Rated Torque (speed) ①②⑦⑧⑨⑩		T_{rtd}	Nm	-	-	-	-	-	-	-	-	-	-	-	-	-	-
				lb-in	-	-	-	-	-	-	-	-	-	-	-	-	-	-
	Rated Speed		N_{rtd}	rpm	-	-	-	-	-	-	-	-	-	-	-	-	-	-
	Rated Power (speed) ①②⑦⑧⑨		P_{rtd}	kW	-	-	-	-	-	-	-	-	-	-	-	-	-	-
				Hp	-	-	-	-		-	-	-	-	-	-	-	-	-
160 Vdc	Rated Torque (speed) ①②⑦⑧⑨⑩		T_{rtd}	Nm	-	-	-	-	-	-	-	-	-	-	-	-	-	-
				lb-in	-	-	-	-	-	-	-	-	-	-	-	-	-	-
	Rated Speed		N_{rtd}	rpm	-	-	-	-	-	-	-	-	-	-	-	-	-	-
	Rated Power (speed) ①②⑦⑧⑨		P_{rtd}	kW	-	-	-	-	-	-	-	-	-	-	-	-	-	-
				Hp	-	-	-	-	-	-	-	-	-	-	-	-	-	-
320 Vdc	Rated Torque (speed) ①②⑦⑧⑨⑩		T_{rtd}	Nm	10.8	10.0	9.50	6.5	-	14.2	14.3	11.9	18.8	18.4	15.3	22.4	21.9	19.1
				lb-in	99	89	84.1	58	-	126	127	105	166	163	135	198	194	169
	Rated Speed		N_{rtd}	rpm	1000	2500	3000	5500	-	1500	2000	3500	1200	1500	3000	1300	1500	2400
	Rated Power (speed) ①②⑦⑧⑨		P_{rtd}	kW	1.17	2.62	2.98	3.74	-	2.23	2.99	4.36	2.36	2.89	4.81	3.05	3.44	4.8
				Hp	1.57	3.51	4.00	5.02	-	2.99	4.01	5.85	3.17	3.87	6.45	4.09	4.61	6.44
560 Vdc	Rated Torque (speed) ①②⑦⑧⑨⑩		T_{rtd}	Nm	10.2	7.42	5.70	-	14.6	12.9	11.3	-	17.2	15.6	10.7	19.2	18.8	14.9
				lb-in	90.3	65.7	50.4	-	129	114	100	-	152	138	95	170	166	132
	Rated Speed		N_{rtd}	rpm	2000	5000	6000	-	1500	3000	4000	-	2000	3000	5000	2500	2700	4000
	Rated Power (speed) ①②⑦⑧⑨		P_{rtd}	kW	2.14	3.89	3.58	-	2.29	4.05	4.73	-	3.60	4.90	5.6	5.03	5.32	6.24
				Hp	2.86	5.21	4.80	-	3.08	5.43	6.34	-	4.83	6.57	7.51	6.74	7.13	8.37
640 Vdc	Rated Torque (speed) ①②⑦⑧⑨⑩		T_{rtd}	Nm	9.9	5.74	5.70	-	14.2	12.0	10.5	-	16.3	14.4	7.4	18.6	18.1	11.6
				lb-in	87.6	50.8	50.4	-	126	106	92.9	-	144	127	66	165	160	103
	Rated Speed		N_{rtd}	rpm	2400	6000	6000	-	1800	3500	4500	-	2500	3500	6000	2800	3000	5000
	Rated Power (speed) ①②⑦⑧⑨		P_{rtd}	kW	2.49	3.61	3.58	-	2.68	4.4	4.95	-	4.27	5.28	4.65	5.37	5.69	6.08
				Hp	3.34	4.84	4.80	-	3.59	5.90	6.63	-	5.72	7.07	6.23	7.2	7.62	8.14

See following page for notes.

AKM6x Performance Data – Up to 640 Vdc (Continued)

				AKM62				AKM63				AKM64			AKM65		
Parameters	Tol	Sym	Units	H	L	M	Q	H	L	M	Q	K	L	Q	L	M	P
Torque Constant ①	±10%	K_t	Nm/A_{rms}	2.2	1.0	0.91	0.60	3.00	1.5	1.24	0.75	2.28	1.66	1.0	2.1	1.85	1.3
			$lb\text{-}in/A_{rms}$	19.5	8.85	8.1	5.3	26.6	13.3	11.0	7.1	20.2	14.7	8.85	18.6	16.4	11.5
Back EMF Constant ⑥	±10%	K_e	V/k_{rpm}	142	65.5	58.8	35.5	191.5	98.2	79.9	48.3	147	107	64.4	133	119	80.5
Motor Constant	Nom	K_m	$N\text{-}m/\sqrt{W}$	0.989	0.949	0.984	1.00	1.32	1.26	1.30	1.28	1.57	1.57	1.44	1.81	1.77	1.75
			$lb\text{-}in/\sqrt{W}$	8.75	8.40	8.71	8.85	11.7	11.2	11.5	11.3	13.9	13.9	12.8	16.0	15.6	15.4
Resistance (line-line) ⑥	±10%	R_m	ohm	3.3	0.74	0.57	0.24	3.43	0.94	0.61	0.23	1.41	0.75	0.32	0.90	0.73	0.37
Inductance (line-line)		L	mH	25.4	5.4	4.4	1.6	28.1	7.4	4.9	1.8	11.8	6.2	2.3	7.6	6.1	2.8
Inertia (includes Resolver feedback) ③	±10%	J_m	$kg\text{-}cm^2$	17				24				32			40		
			$lb\text{-}in\text{-}s^2$	0.015				0.021				0.028			0.035		
Optional Brake Inertia (additional)	±10%	J_m	$kg\text{-}cm^2$	0.61				0.61				0.61			0.61		
			$lb\text{-}in\text{-}s^2$	5.4E-04				5.4E-04				5.4E-04			5.4E-04		
Weight		W	kg	8.9				11.1				13.3			15.4		
			lb	19.6				24.4				29.3			33.9		
Static Friction ①⑩		T_f	Nm	0.05				0.1				0.15			0.2		
			lb-in	0.44				0.9				1.3			1.8		
Viscous Damping ①		K_{dv}	Nm/k_{rpm}	0.04				0.06				0.08			0.1		
			$lb\text{-}in/k_{rpm}$	0.35				0.53				0.71			0.9		
Thermal Time Constant		TCT	minutes	20				25				30			35		
Thermal Resistance		$R_{thw\text{-}a}$	°C/W	0.46				0.41				0.38			0.35		
Pole Pairs				5				5				5			5		
Heat Sink Size				18"x18"x1/2" Aluminum Plate				18"x18"x1/2" Aluminum Plate				18"x18"x1/2" Aluminum Plate			18"x18"x1/2" Aluminum Plate		

Notes:
① Motor winding temperature rise, ΔT=100°C, at 40°C ambient.
② All data referenced to sinusoidal commutation.
③ Add parking brake if applicable for total inertia.
④ Motor with standard heat sink.
⑤ May be limited at some values of Vbus.
⑥ Measured at 25°C.
⑦ Brake motor option reduces continuous torque ratings by:
AKM62 = 0.5 Nm AKM63 = 0.9 Nm AKM64 = 1.3 Nm AKM65 = 1.7 Nm
⑧ Non-Resolver feedback options reduce continuous torque ratings by:
AKM62 = 0.9 Nm AKM63 = 1.2 Nm AKM64 = 1.5 Nm AKM65 = 1.8 Nm
⑨ Motors with non-resolver feedback and brake option, reduce continuous torque by:
AKM62 = 1.6 Nm AKM63 = 2.4 Nm AKM64 = 3.1 Nm AKM65 = 4.0 Nm
⑩ For motors with optional shaft seal, reduce torque shown by 0.25 Nm (2.21 lb-in), and increase T_f by the same amount.

Additional Notes: See system data beginning on page 14 for typical torque/speed performance.
Additional windings can be found through our online Motioneering sizing and selection software tool. See page 73 for more information.

AKM7x Outline Drawings

AKM7x Frame

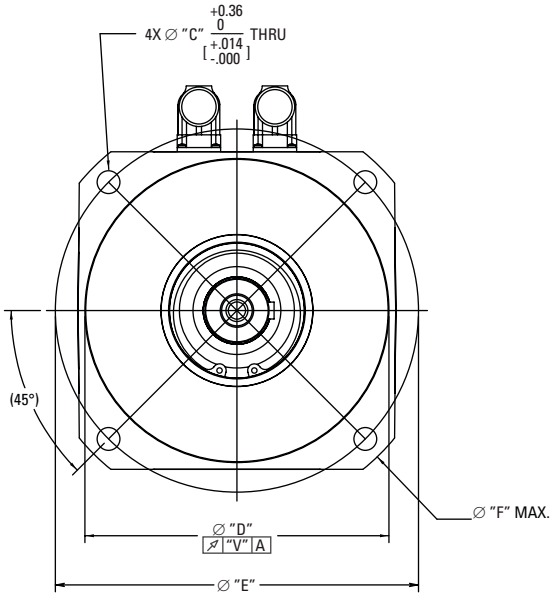

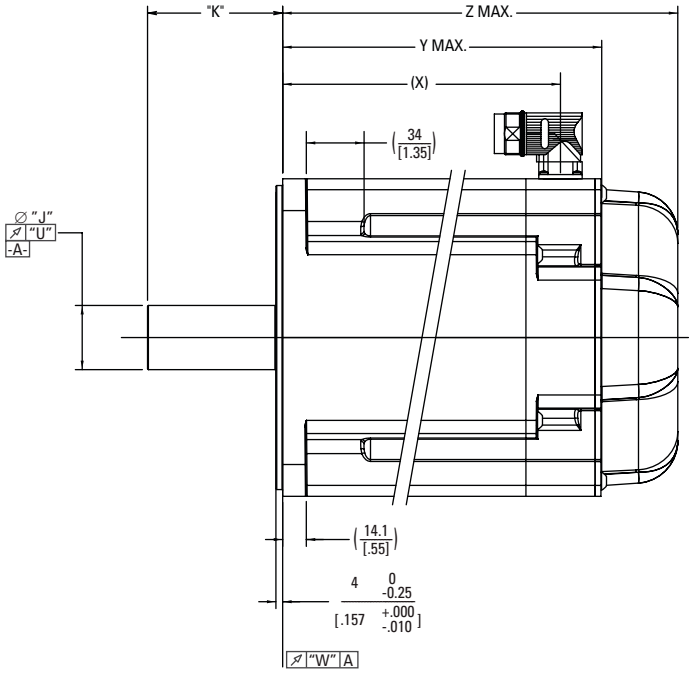

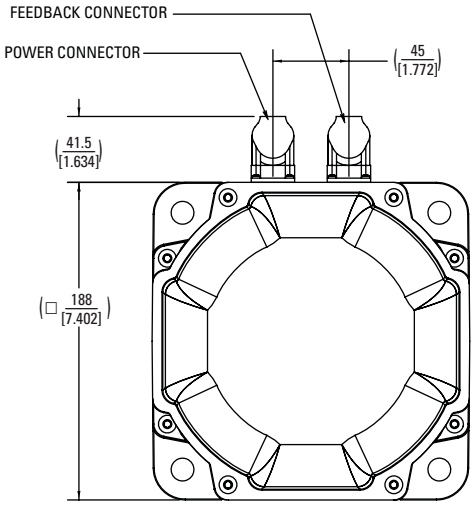

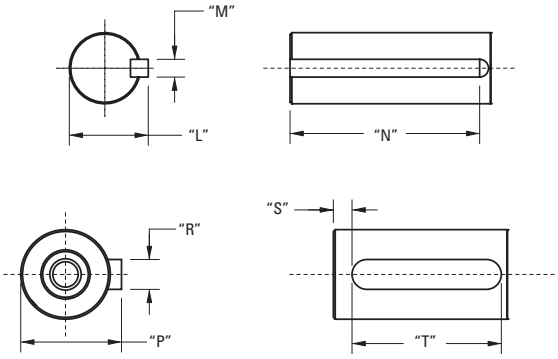

AKM7x Dimension Data

AKM7x Dimension Data

Mounting Code	"C"	"D"	"E"	"F"	"H"	"J"	"K"	"L"
AC	13.50 [.531]	180 +0.014 -0.011 [7.0866 +.0005 -.0004] j6	215.00 [8.465	–	D M12 DIN 332	38 +0.018 +0.002 [1.496 +.0007 +.0001] k6	80 [3.15]	–
AN	13.50 [.531]	180 +0.014 -0.011 [7.0866 +.0005 -.0004] j6	215.00 [8.465	–	D M12 DIN 332	38 +0.018 +0.002 [1.496 +.0007 +.0001] k6	80 [3.15]	–
GC	13.50 [.531]	180 +0.014 -0.011 [7.0866 +.0005 -.0004] j6	215.00 [8.465	–	D M12 DIN 332	32 +0.018 +0.002 [1.5298 +.0007 +.0001] k6	58.5 [2.30]	–
GN	13.50 [.531]	180 +0.014 -0.011 [7.0866 +.0005 -.0004] j6	215.00 [8.465	–	D M12 DIN 332	32 +0.018 +0.002 [1.5298 +.0007 +.0001] k6	58.5 [2.30]	–
KK	13.50 [.531]	114.3 0 -0.025 [4.5000 +.0000 -.0010]	200 [7.874]	225 [8.858]	–	35 +0 +0.016 [1.3779 +.0000 +.0005] h6	79 [3.11]	38 0 -0.29 [1.496 +.000 -.011]

Mounting Code	"M"	"N"	"P"	"R"	"S"	"T"	"U"	"V"	"W"
AC	–	–	41 0 -0.29 [1.614 +.000 -.011]	10 0 -0.036 [.3937 +.0000 -.0014] N9	5.00 [.197]	70 0 -0.30 [2.756 +.000 -.012]	0.050 [.0019]	0.100 [.0039]	0.100 [.0039]
AN	–	–	–	–	–	–	0.050 [.0019]	0.100 [.0039]	0.100 [.0039]
GC	–	–	35 0 -0.29 [1.378 +.000 -.011]	108 0 -0.036 [.3937 +.0000 -.0014] N9	4 [.157]	50 0 -0.30 [1.969 +.000 -.012]	0.050 [.0019]	0.100 [.0039]	0.100 [.0039]
GN	–	–	–	–	–	–	0.050 [.0019]	0.100 [.0039]	0.100 [.0039]
KK	10 0 -0.036 [.3937 +.0000 -.0014]	70 0 -0.30 [2.756 +.000 -.12]	–	–	–	–	0.050 [.0019]	0.100 [.0039]	0.100 [.0039]

MODEL	Z MAX SINE ENCODER (NO BRAKE)	Z MAX SINE ENCODER (W/ BRAKE)	(X)	Y MAX	Z MAX (W/ BRAKE)
AKM72	201.7 [7.94]	253.3 [9.97]	164.5 [6.48]	192.5 [7.58]	234.5 [9.23]
AKM73	235.7 [9.38]	287.3 [11.31]	198.5 [7.81]	226.5 [8.92]	268.5 [10.57]
AKM74	269.7 [10.62]	321.3 [12.65]	232.5 [9.15]	260.5 [10.26}	302.5 [11.91]

Note 1: Dimensions are in mm [inches].
Note 2: Product designed in metric. English conversions provided for reference only.

AKM7x Performance Data

AKM7x Performance Data – Up to 640 Vdc

					AKM72			AKM73			AKM74		
	Parameters	Tol	Symbol	Units	L	P	Q	L	P	Q	L	P	Q
	Max Rated DC Bus Voltage	Max	Vbus	Vdc	640	640	640	640	640	640	640	640	640
	Continuous Torque (Stall) for ΔT winding = 100°C ①②⑦⑧⑨	Nom	T_{cs}	Nm	30	29.4	29.5	42	41.6	41.5	53.0	52.5	52.2
				lb-in	266	260	261	372	368	367	469	465	426
	Continuous Current (Stall) for ΔT winding = 100°C ①②⑦⑧⑨	Nom	I_{cs}	A_{rms}	11.5	18.7	23.5	12.1	19.5	24.5	12.9	18.5	26.1
	Continuous Torque (Stall) for ΔT winding = 60°C ②	Nom	T_{cs}	Nm	24	23.5	23.6	33.6	33.3	33.2	42.4	42.0	41.8
				lb-in	212	208	209	297	295	294	375	372	370
	Max Mechanical Speed ⑤	Nom	N_{max}	rpm	6000	6000	6000	6000	6000	6000	6000	6000	6000
	Peak Torque ①②	Nom	T_p	Nm	79.5	78.5	78.4	113	111	111	143	142	141
				lb-in	704	695	694	1000	985	982	1269	1253	1250
	Peak Current	Nom	I_p	A_{rms}	34.5	56.1	70.5	36.3	58.6	73.5	38.7	55.5	78.3
75 Vdc	Rated Torque (speed) ①②⑦⑧⑨⑩		T_{rtd}	Nm	-	-	-	-	-	-	-	-	-
				lb-in	-	-	-	-	-	-	-	-	-
	Rated Speed		N_{rtd}	rpm	-	-	-	-	-	-	-	-	-
	Rated Power (speed) ①②⑦⑧⑨		P_{rtd}	kW	-	-	-	-	-	-	-	-	-
				Hp	-	-	-	-	-	-	-	-	-
160 Vdc	Rated Torque (speed) ①②⑦⑧⑨⑩		T_{rtd}	Nm	-	-	-	-	-	-	-	-	-
				lb-in	-	-	-	-	-	-	-	-	-
	Rated Speed		N_{rtd}	rpm	-	-	-	-	-	-	-	-	-
	Rated Power (speed) ①②⑦⑧⑨		P_{rtd}	kW	-	-	-	-	-	-	-	-	-
				Hp	-	-	-	-	-	-	-	-	-
320 Vdc	Rated Torque (speed) ①②⑦⑧⑨⑩		T_{rtd}	Nm	-	23.8	23.3	-	34.7	33.4	-	-	42.8
				lb-in	-	211	205	-	307	296	-	-	379
	Rated Speed		N_{rtd}	rpm	-	1800	2000	-	1300	1500	-	-	1200
	Rated Power (speed) ①②⑦⑧⑨		P_{rtd}	kW	-	4.49	4.86	-	4.72	5.25	-	-	5.38
				Hp	-	6.01	6.52	-	6.33	7.04	-	-	7.21
560 Vdc	Rated Torque (speed) ①②⑦⑧⑨⑩		T_{rtd}	Nm	25.3	20.1	16.3	34.4	28.5	25.2	43.5	39.6	31.5
				lb-in	224	178	144	304	252	223	385	350	279
	Rated Speed		N_{rtd}	rpm	1500	3000	4000	1400	2400	3000	1200	1800	2500
	Rated Power (speed) ①②⑦⑧⑨		P_{rtd}	kW	3.97	6.31	6.83	5.04	7.16	7.92	5.47	7.46	8.25
				Hp	5.32	8.46	9.16	6.76	9.60	10.6	7.33	10.0	11.1
640 Vdc	Rated Torque (speed) ①②⑦⑧⑨⑩		T_{rtd}	Nm	24.3	18.2	14.1	33.8	26.3	22.0	41.5	35.9	27.3
				lb-in	215	161	125	299	233	195	367	318	242
	Rated Speed		N_{rtd}	rpm	1800	3500	4500	1500	2800	3500	1400	2000	3000
	Rated Power (speed) ①②⑦⑧⑨		P_{rtd}	kW	4.58	6.67	6.65	5.31	7.71	8.07	6.08	7.52	8.58
				Hp	6.14	8.94	8.91	7.12	10.3	10.8	8.16	10.1	11.5

See following page for notes.

AKM7x Performance Data – Up to 640 Vdc (Continued)

				AKM72			AKM73			AKM74		
Parameters	Tol	Symbol	Units	L	P	Q	L	P	Q	L	P	Q
Torque Constant ①	±10%	K_t	Nm/A_{rms}	2.6	1.58	1.3	3.5	2.13	1.7	4.14	2.84	2.0
			$lb\text{-}in/A_{rms}$	23.0	14.0	11.5	31.0	18.9	15	36.6	25.1	17.7
Back EMF Constant ⑥	±10%	K_e	V/k_{rpm}	169	102	81.2	225	137	109	266	183	129
Motor Constant	Nom	K_m	$N\text{-}m/\sqrt{W}$	2.21	2.18	2.08	2.93	2.82	2.67	3.51	3.38	3.27
			$lb\text{-}in/\sqrt{W}$	19.6	19.3	18.4	25.9	25.0	23.6	31.0	29.9	28.9
Resistance (line-line) ⑥	±10%	R_m	ohm	0.92	0.35	0.26	0.95	0.38	0.25	0.93	0.47	0.25
Inductance (line-line)		L	mH	13.6	5.0	3.2	15.7	5.9	3.7	16.4	7.7	3.8
Inertia (includes Resolver feedback) ③	±10%	J_m	$kg\text{-}cm^2$	65			92			120		
			$lb\text{-}in\text{-}s^2$	0.057			0.082			0.11		
Optional Brake Inertia (additional)	±10%	J_m	$kg\text{-}cm^2$	1.64			1.64			1.64		
			$lb\text{-}in\text{-}s^2$	1.46×10^{-3}			1.46×10^{-3}			1.46×10^{-3}		
Weight		W	kg	19.7			26.7			33.6		
			lb	43.4			58.8			74.0		
Static Friction ①⑩		T_f	Nm	0.16			0.24			0.33		
			lb-in	1.4			2.1			2.9		
Viscous Damping ①		K_{dv}	Nm/k_{rpm}	0.06			0.13			0.2		
			$lb\text{-}in/k_{rpm}$	0.5			1.2			1.8		
Thermal Time Constant		TCT	minutes	46			53			60		
Thermal Resistance		$R_{thw\text{-}a}$	°C/W	0.39			0.33			0.30		
Pole Pairs				5			5			5		
Heat Sink Size				18"x18"x1/2" Aluminum Plate			18"x18"x1/2" Aluminum Plate			18"x18"x1/2" Aluminum Plate		

Notes:
① Motor winding temperature rise, ΔT=100°C, at 40°C ambient.
② All data referenced to sinusoidal commutation.
③ Add parking brake if applicable for total inertia.
④ Motor with standard heat sink.
⑤ May be limited at some values of Vbus.
⑥ Measured at 25°C.
⑦ Brake motor option reduces continuous torque ratings by 1 Nm.
⑧ Non-Resolver feedback options reduce continuous torque ratings by:
AKM72 = 2.0 Nm AKM73 = 2.7 Nm AKM74 = 3.4 Nm
⑨ Motors with non-resolver feedback and brake option, reduce continuous torque by:
AKM72 = 3.9 Nm AKM73 = 5.1 Nm AKM74 = 6.2 Nm
⑩ For motors with optional shaft seal, reduce torque shown by 0.25 Nm (2.21 lb-in), and increase T_f by the same amount.

Additional Notes: See system data beginning on page 14 for typical torque/speed performance.
Additional windings can be found through our online Motioneering sizing and selection software tool. See page 73 for more information.

AKM8x Outline Drawings

AKM8x Frame with Terminal Box

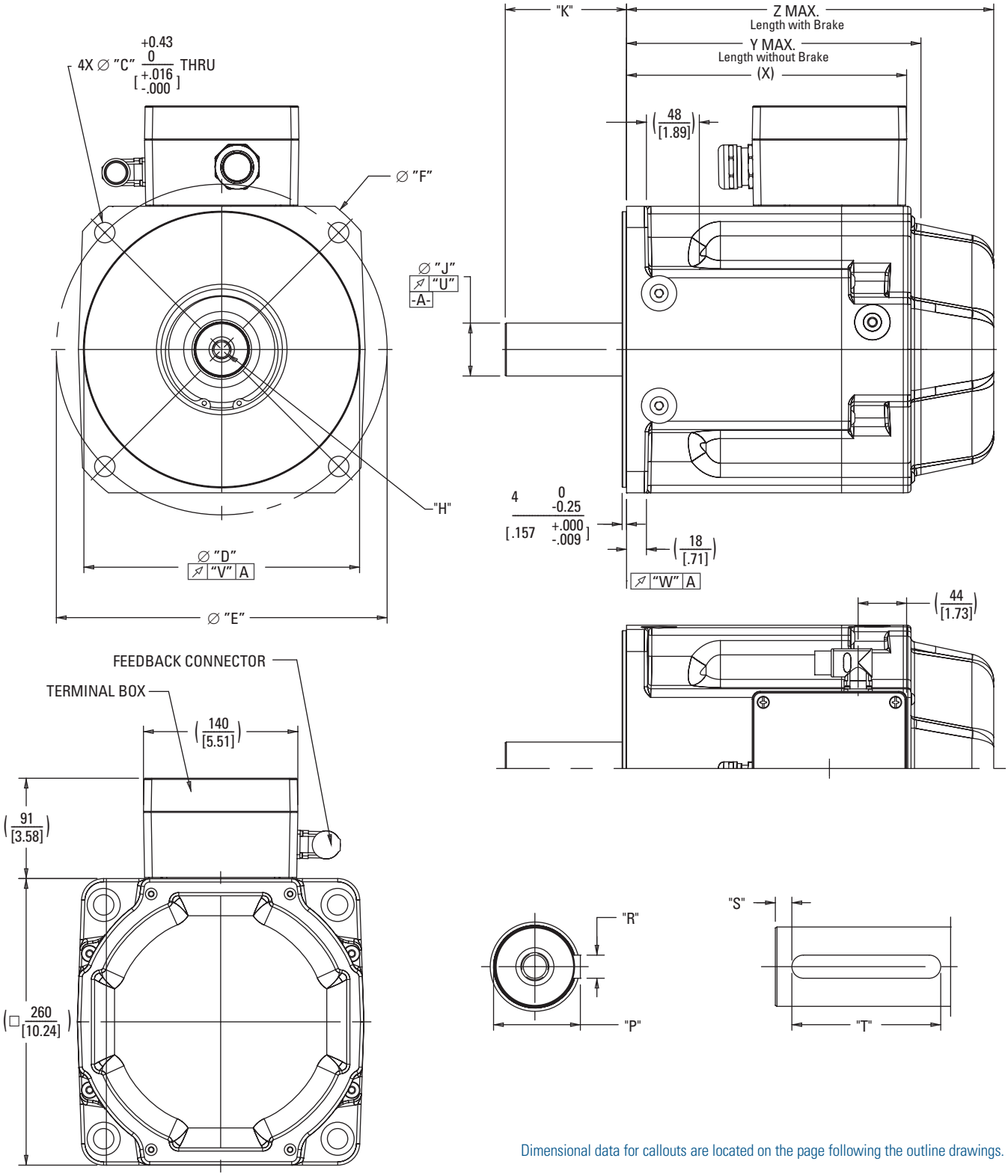

Dimensional data for callouts are located on the page following the outline drawings.

AKM82 Frame with Rotatable IP65 Connectors

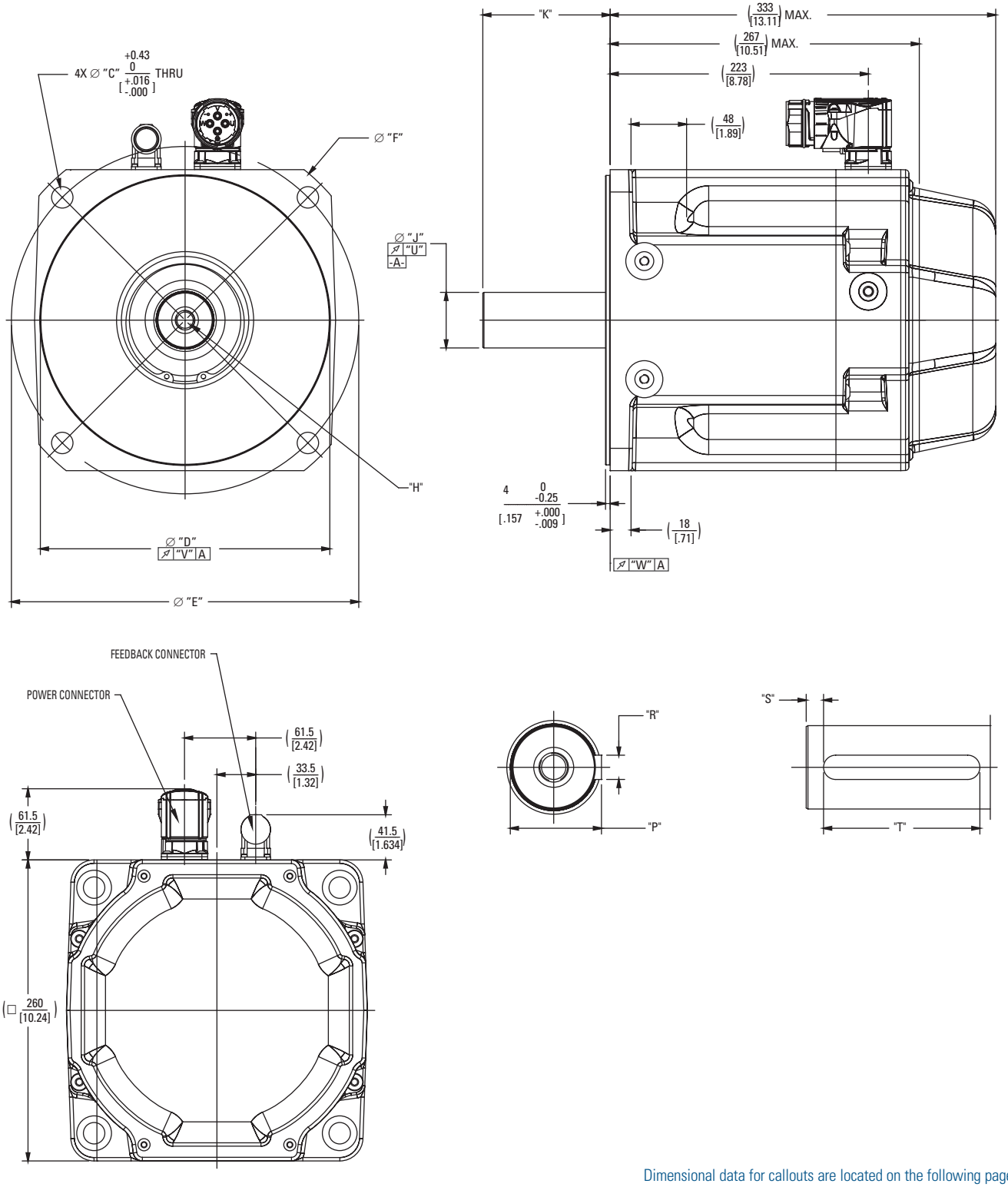

Dimensional data for callouts are located on the following page.

AKM8x Dimension Data

AKM8x Dimension Data

Mounting Code	"C"	"D"	"E"	"F"	"H"	"J"	"K"	"P"	"R"	"S"	"T"	"U"	"V"	"W"
AC	18.5 [.728]	250 +0.016 -0.013 j6 [9.8425 +.0006 -.0005]	300 [11.811]	–	D M16 DIN 332	48 +0.018 +0.002 k6 [1.8898 +.0007 +.0001]	110 [4.33]	51.5 0 -0.29 [2.028 +.000 -.011]	14 0 -0.043 h9 [.5512 +.0000 -.0016]	10 [.394]	90 0 -0.50 [3.543 +.000 -.019]	0.050 [.0019]	0.125 [.0049]	0.125 [.0049]
AN	18.5 [.728]	250 +0.016 -0.013 j6 [9.8425 +.0006 -.0005]	300 [11.811]	–	D M16 DIN 332	48 +0.018 +0.002 k6 [1.8898 +.0007 +.0001]	110 [4.33]	–	–	–	–	0.050 [.0019]	0.125 [.0049]	0.125 [.0049]
CC	14.5 [.571]	230 +0.016 -0.013 j6 9.055 +.0006 -.0005]	265 [10.433]	300 [11.811]	D M16 DIN 332	48 +0.018 +0.002 k6 [1.8898 +.0007 +.0001]	110 [4.33]	51.5 0 -0.29 [2.028 +.000 -.011]	14 0 -0.043 h9 [.5512 +.0000 -.0016]	10 [.394]	90 0 -0.50 [3.543 +.000 -.019]	0.050 [.0019]	0.100 [.0039]	0.100 [.0039]
CN	14.5 [.571]	230 +0.016 -0.013 j6 [9.055 +.0006 -.0005]	265 [10.433]	300 [11.811]	D M16 DIN 332	48 +0.018 +0.002 k6 [1.8898 +.0007 +.0001]	82 [3.228]	–	–	–	–	0.050 [.0019]	0.100 [.0039]	0.100 [.0039]
HC	14.5 [.571]	230 -0.013 +.0006 j6 [9.055 -.0005 -.0005]	265 [10.433]	300 [11.811]	D M16 DIN 332	42 +0.018 +0.002 k6 [1.6535 +.0007 +.0001]	82 [3.228]	45 0 -0.29 [1.7772 +.000 -.011]	12 0 -0.043 h9 [.5512 +.0000 -.0016]	8 [.315]	63 0 -0.50 [2.480 +.000 -.019]	0.050 [.0019]	0.100 [.0039]	0.100 [.0039]
HN	14.5 [.571]	230 +0.016 -0.013 j6 [9.055 +.0006 -.0005]	265 [10.433]	300 [11.811]	D M16 DIN 332	42 +0.018 +0.002 k6 [1.6535 +.0007 +.0001]	82 [3.228]	–	–	–	–	0.050 [.0019]	0.100 [.0039]	0.100 [.0039]
GC	18.5 [.728]	250 +0.016 -0.013 j6 [9.8425 +.0006 -.0005]	300 [11.811]	–	D M16 DIN 332	48 +0.018 +0.002 k6 [1.8898 +.0007 +.0001]	82 [3.228]	51.5 0 -0.29 [2.028 +.000 -.011]	14 0 -0.043 h9 [.5512 +.0000 -.0016]	8 [.315]	63 0 -0.50 [2.480 +.000 -.019]	0.050 [.0019]	0.125 [.0049]	0.125 [.0049]
GN	18.5 [.728]	250 +0.016 -0.013 j6 [9.8425 +.0006 -.0005]	300 [11.811]	–	D M16 DIN 332	48 +0.018 +0.002 k6 [1.8898 +.0007 +.0001]	82 [3.228]	–	–	–	–	0.050 [.0019]	0.125 [.0049]	0.125 [.0049]
REINFORCED BEARNGS														
MC	18.5 [.728]	250 +0.016 -0.013 j6 [9.8425 +.0006 -.0005]	300 [11.811]	–	D M16 DIN 332	48 +0.018 +0.002 k6 [1.8898 +.0007 +.0001]	110 [4.33]	51.5 0 -0.29 [2.028 +.000 -.011]	14 0 -0.043 h9 [.5512 +.0000 -.0016]	10 [.394]	90 0 -0.50 [3.543 +.000 -.019]	0.050 [.0019]	0.125 [.0049]	0.125 [.0049]
MN	18.5 [.728]	250 +0.016 -0.013 j6 [9.8425 +.0006 -.0005]	300 [11.811]	–	D M16 DIN 332	48 +0.018 +0.002 k6 [1.8898 +.0007 +.0001]	110 [4.33]	–	–	–	–	0.050 [.0019]	0.125 [.0049]	0.125 [.0049]
TC	14.5 [.571]	230 +0.016 -0.013 j6 [9.055 +.0006 -.0005]	265 [10.433]	300 [11.811]	D M16 DIN 332	48 +0.018 +0.002 k6 [1.8898 +.0007 +.0001]	110 [4.33]	51.5 0 -0.29 [2.028 +.000 -.011]	14 0 -0.043 h9 [.5512 +.0000 -.0016]	10 [.394]	90 0 -0.50 [3.543 +.000 -.019]	0.050 [.0019]	0.100 [.0039]	0.100 [.0039]
TN	14.5 [.571]	230 +0.016 -0.013 j6 [9.055 +.0006 -.0005]	265 [10.433]	300 [11.811]	D M16 DIN 332	48 +0.018 +0.002 k6 [1.8898 +.0007 +.0001]	110 [4.33]	–	–	–	–	0.050 [.0019]	0.100 [.0039]	0.100 [.0039]

MODEL	(X)	Y MAX (W/O Brake)	Z MAX (W/ BRAKE)
AKM82 "H" Connector	223.0 [8.78]	267.0 [10.51]	333.0 [13.11]
AKM82 "T" TERMINAL BOX	255.0 [10.04]	267.0 [10.51]	333.0 [13.11]
AKM83 "T" TERMINAL BOX	335.5 [13.21]	347.5 [13.68]	413.5 [16.25]
AKM84 "T" TERMINAL BOX	416.0 [16.38]	428.0 [16.85]	494.0 [19.45]

Note: Dimensions are in mm [inches]. Product designed in metric. English conversions provided for reference only.

AKM8x Performance Data

AKM8x Performance Data – Up to 640 Vdc

	Parameters	Tol	Symbol	Units	AKM82T	AKM83T	AKM84T
	Max Rated DC Bus Voltage	Max	Vbus	Vdc	640	640	640
	Continuous Torque (Stall) for ΔT winding = 100°C ①②⑦⑧⑨	Nom	T_{cs}	Nm	75	130	180
				lb-in	664	1151	1593
	Continuous Current (Stall) for ΔT winding = 100°C ①②⑦⑧⑨	Nom	I_{cs}	A_{rms}	48	62	67
	Continuous Torque (Stall) for ΔT winding = 60°C ②	Nom	T_{cs}	Nm	58.1	100	140
				lb-in	514	885	1239
	Max Mechanical Speed ⑤	Nom	N_{max}	rpm	3000	3000	3000
	Peak Torque ①②	Nom	T_p	Nm	210	456	668
				lb-in	1859	4036	5912
	Peak Current	Nom	I_p	A_{rms}	240	310	335
75 Vdc	Rated Torque (speed) ①②⑦⑧⑨⑩		T_{rtd}	Nm	-	-	-
				lb-in	-	-	-
	Rated Speed		N_{rtd}	rpm	-	-	-
	Rated Power (speed) ①②⑦⑧⑨		P_{rtd}	kW	-	-	-
				Hp	-	-	-
160 Vdc	Rated Torque (speed) ①②⑦⑧⑨⑩		T_{rtd}	Nm	-	-	-
				lb-in	-	-	-
	Rated Speed		N_{rtd}	rpm	-	-	-
	Rated Power (speed) ①②⑦⑧⑨		P_{rtd}	kW	-	-	-
				Hp	-	-	-
320 Vdc	Rated Torque (speed) ①②⑦⑧⑨⑩		T_{rtd}	Nm	-	-	-
				lb-in	-	-	-
	Rated Speed		N_{rtd}	rpm	-	-	-
	Rated Power (speed) ①②⑦⑧⑨		P_{rtd}	kW	-	-	-
				Hp	-	-	-
560 Vdc	Rated Torque (speed) ①②⑦⑧⑨⑩		T_{rtd}	Nm	47.5	70	105
				lb-in	420	620	929
	Rated Speed		N_{rtd}	rpm	2500	2200	1800
	Rated Power (speed) ①②⑦⑧⑨		P_{rtd}	kW	12.4	16.1	19.8
				Hp	16.65	21.62	26.58
640 Vdc	Rated Torque (speed) ①②⑦⑧⑨⑩		T_{rtd}	Nm	38	60	93
				lb-in	336	531	823
	Rated Speed		N_{rtd}	rpm	3000	2500	2000
	Rated Power (speed) ①②⑦⑧⑨		P_{rtd}	kW	11.9	15.7	19.5
				Hp	16.0	21.0	26.1

See following page for notes.

AKM8x Performance Data

AKM8x Performance Data – Up to 640 Vdc (Continued)

Parameters	Tol	Symbol	Units	AKM82T	AKM83T	AKM84T
Torque Constant ①	±10%	K_t	Nm/A_{rms}	1.6	2.1	2.7
			$lb\text{-}in/A_{rms}$	14	19	23.8
Back EMF Constant ⑥	±10%	K_e	V/k_{rpm}	108	140	177
Motor Constant	Nom	K_m	$N\text{-}m/\sqrt{W}$	4.31	6.94	9.15
			$lb\text{-}in/\sqrt{W}$	38.1	61.4	81.0
Resistance (line-line) ⑥	±10%	R_m	ohm	0.092	0.061	0.058
Inductance (line-line)		L	mH	2.73	2.36	2.5
Inertia (includes Resolver feedback) ③		J_m	$kg\text{-}cm^2$	172	334	495
			$lb\text{-}in\text{-}s^2$	0.15	0.29	0.43
Optional Brake Inertia (additional)		J_m	$kg\text{-}cm^2$	5.53	5.53	5.53
			$lb\text{-}in\text{-}s^2$	4.90E-03	4.90E-03	4.90E-03
Weight		W	kg	49	73	97
			lb	107.8	160.6	213.4
Static Friction ①⑩		T_f	Nm	1.7	1.83	2.34
			lb-in	15.05	16.20	20.71
Viscous Damping ①		K_{dv}	Nm/k_{rpm}	0.35	0.95	1.6
			$lb\text{-}in/k_{rpm}$	3.10	8.41	14.16
Thermal Time Constant		TCT	minutes	71	94	116
Thermal Resistance		$R_{thw\text{-}a}$	°C/W	0.225	0.203	0.183
Pole Pairs				5	5	5
Heat Sink Size				18"x18"x1/2" Aluminum Plate	18"x18"x1/2" Aluminum Plate	18"x18"x1/2" Aluminum Plate

Notes:
① Motor winding temperature rise, ΔT = 100°C, at 40°C ambient.
② All data referenced to sinusoidal commutation.
③ Add parking brake if applicable for total inertia.
④ Motor with standard heat sink.
⑤ May be limited at some values of Vbus.
⑥ Measured at 25°C.
⑦ Brake option decreases continuous torque by 6Nm
⑧ Brake option increases weight by 9 kg
⑨ Non-Resolver feedback options reduce continuous torque ratings by:
AKM82 = 9 Nm, AKM83 = 6 Nm, AKM84 = 18 Nm
⑩ Motor with non-resolver feedback and brake options reduce continuous torque ratings by:
AKM82 = 17 Nm, AKM83 = 16 Nm, AKM84 = 28 Nm

Additional Notes: See system data beginning on page 14 for typical torque/speed performance.
Additional windings can be found through our online Motioneering sizing and selection software tool. See page 73 for more information.

L10 Bearing Fatigue and Shaft Loading

AKM1 MOTORS

20,000 HOURS L_{10} BEARING LIFE

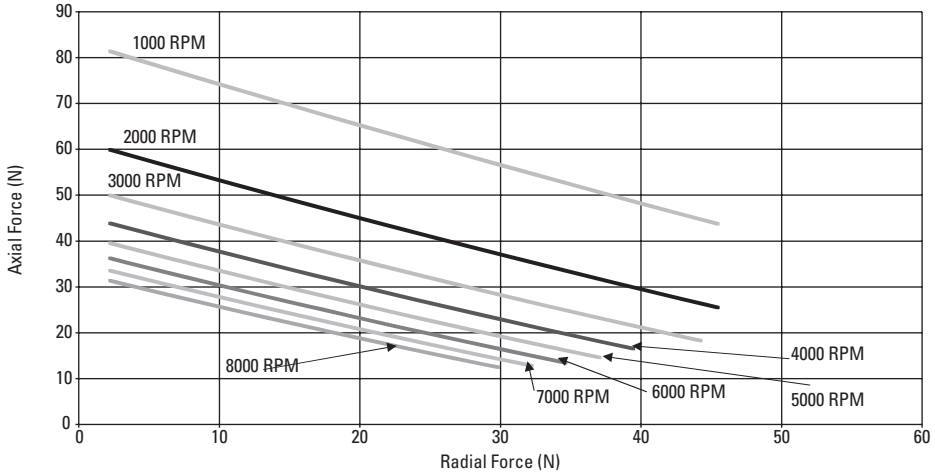

AKM2 MOTORS

20,000 HOURS L_{10} BEARING LIFE

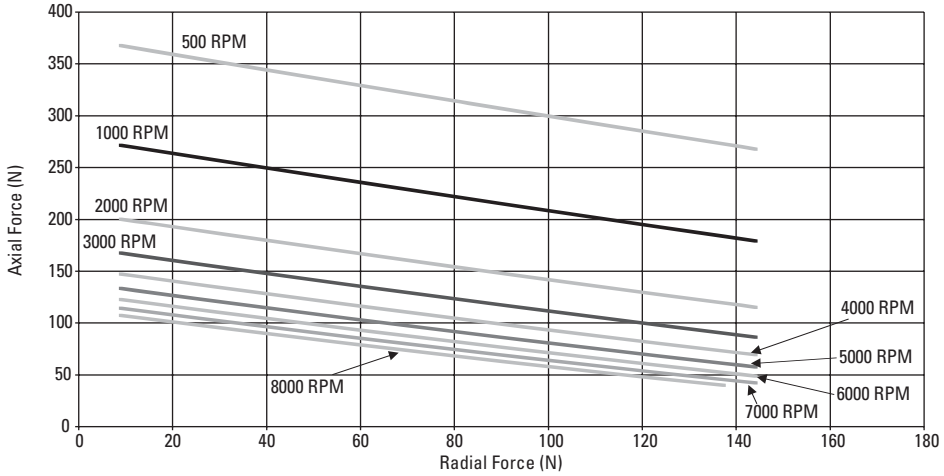

AKM3 MOTORS

20,000 HOURS L_{10} BEARING LIFE

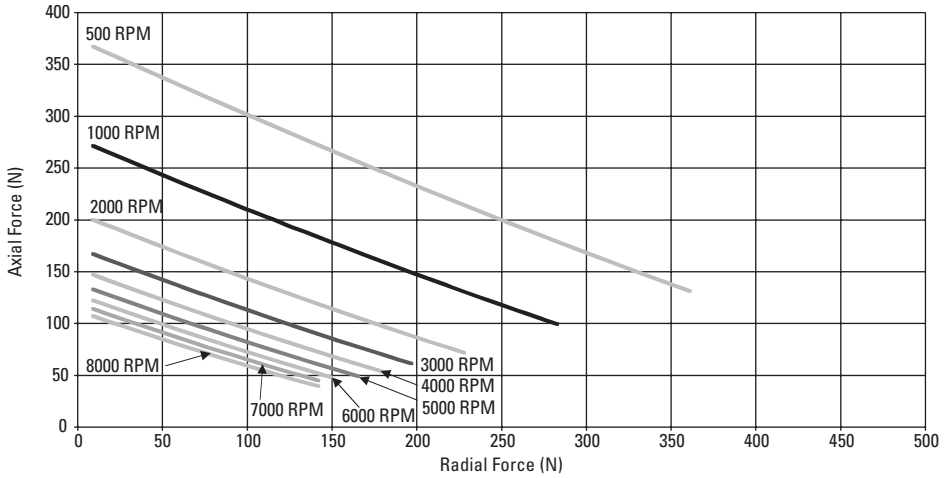

L10 Bearing Fatigue and Shaft Loading

AKM4 MOTORS

20,000 HOURS L_{10} BEARING LIFE

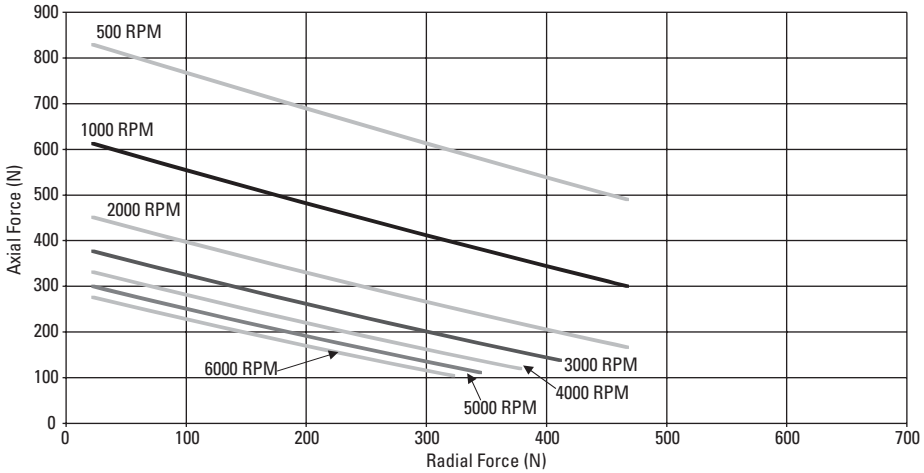

AKM5 MOTORS

20,000 HOURS L_{10} BEARING LIFE

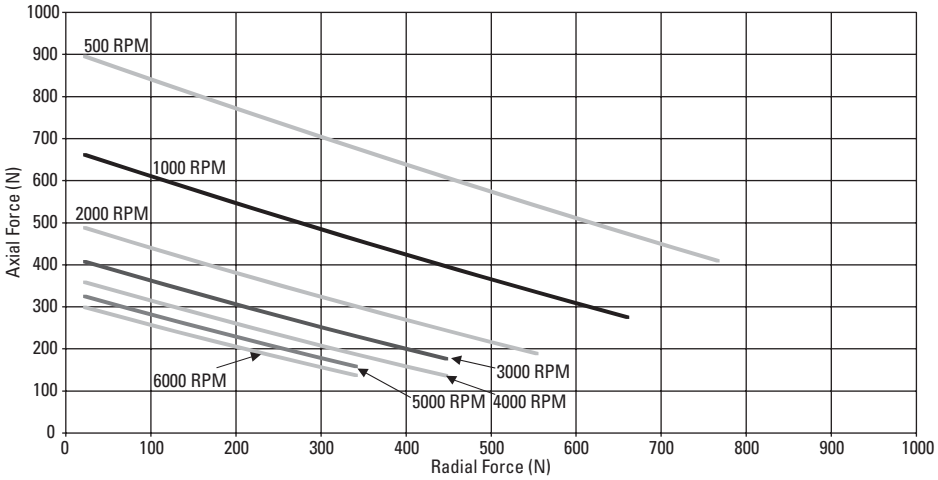

AKM6 MOTORS

20,000 HOURS L_{10} BEARING LIFE

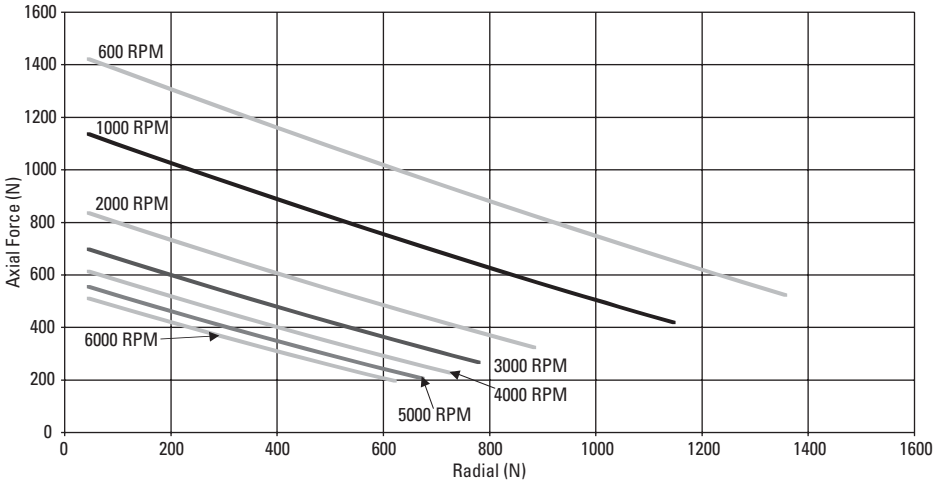

AKM7 MOTORS

20,000 HOURS L_{10} BEARING LIFE

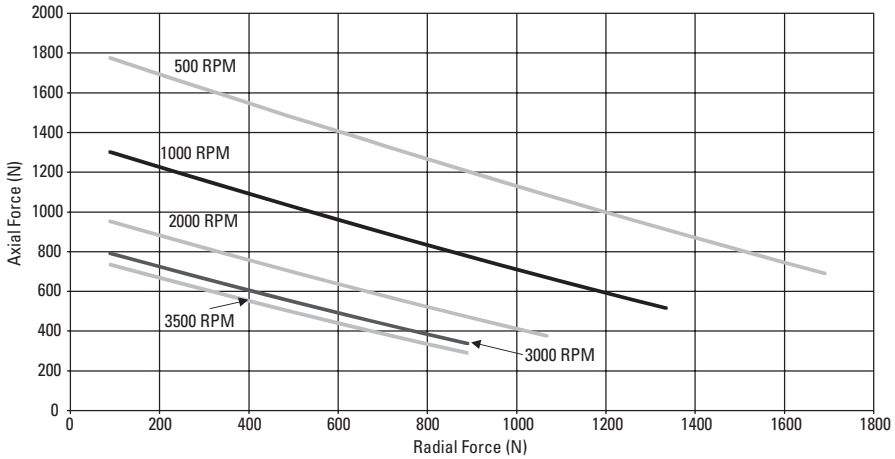

AKM8 MOTORS

20,000 HOURS L_{10} BEARING LIFE

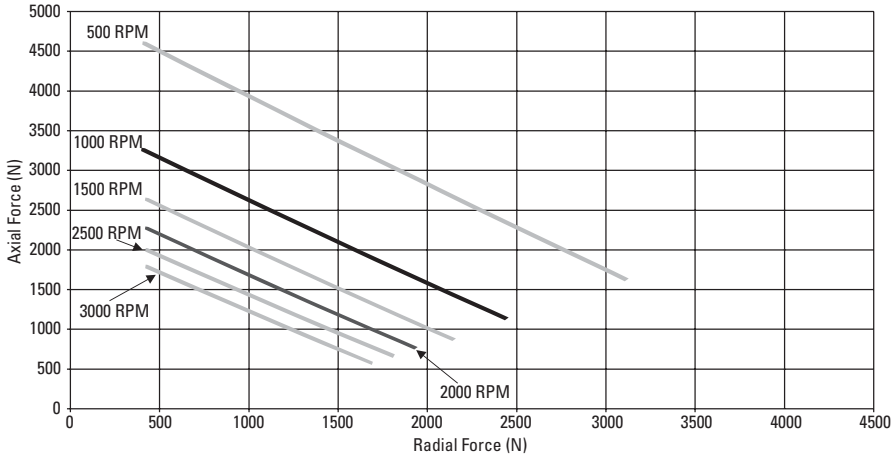

AKM83 & 84 MOTOR WITH REINFORCED BEARING

20,000 HOURS L_{10} BEARING LIFE

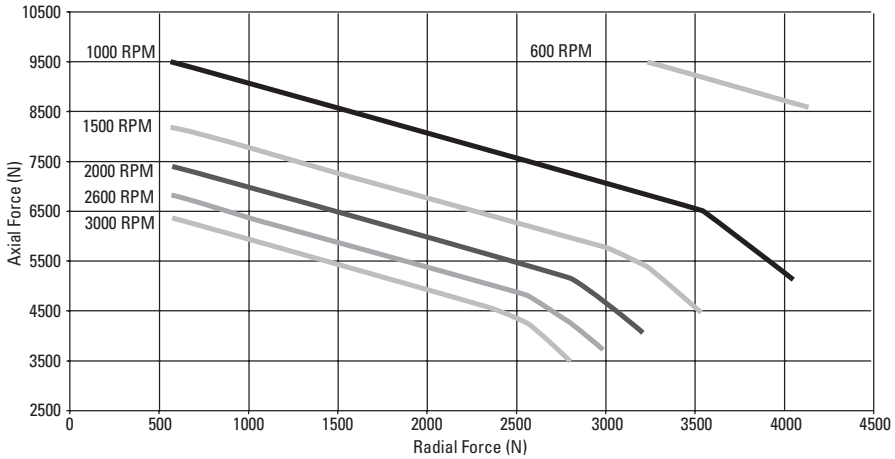

Shaft Loading

Motor	Max. Radial Force (N)	Max. Axial Force (N)
AKM1	48	200
AKM2	150	600
AKM3	340	600
AKM4	500	1400
AKM5	830	1740
AKM6	1940	2200
AKM7	2300	3000
AKM8	2752	4750

The maximum radial load ratings reflect the following assumptions:

1. Motors are operated with peak torque of the longest member of the frame size.
2. Fully reversed load applied to the end of the smallest diameter standard mounting shaft extension. Excluding AKM4X-EK which is rated at 240 N max. radial force.
3. Infinite life with 99% reliability.
4. Safety factor = 2.

Teflon Shaft Seals

There is a normal break-in period for our Teflon shaft seals. Best conditions during the break-in period would be at the operational temperature and speed that would be typical for the application.

During the break-in period, some “shedding” of Teflon material is normal. The debris is not a sign of seal deterioration or failure. The material “shed” should be reduced with usage.

Typically, a few hours at operational speed is enough to break-in the shaft seal.

Feedback Options

Phasing Diagram - All Motors

Motor Winding Configuration

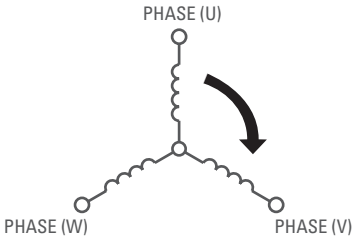

General notes:

1 When motor is rotated CW (viewed from drive shaft end), these waveforms result:
Voltage U , leads V , leads W.
Voltage U-W leads Voltage V-W by 60° electrical.

2A PTC thermistor (155°C ± 5°C switching temperature) installed.
Resistance at 25°C: ≤550 ohms.
Switching Resistance: ≥1330 ohms within ±5°C of switch temperature.

2B Optional KTY84-130 Nominal Resistance at 25°C, 603 ohms.

2C Optional KTY83-110 Nominal Resistance at 25°C, 1000 ohms.

3 When optional shaft seal is included on front shaft extension, note that static friction stated in catalog or on winding data sheet is measured without shaft seal installed.

4 Standard outline drawings showing mounting dimensions and standard winding information are available on our website or by calling the Kollmorgen Customer Support at 1-540-633-3545, or through email at support@kollmorgen.com.

Feedback Summary for AKM Servomotor with AKD Servo Drive

Feedback Device/ (Motor designation)	Plug & Play, Motor ID[3]	AKM Models	Device Resolution Cycles or Lines/rev	Resolution after AKD Interpolation[4]: counts (arc-min)	Accuracy: Arc-min (±)
Comcoder (1-)	N	AKM1-8	1024	4096 (5.27)	5.27
Comcoder (2-)	N	AKM1-8	2048	8192 (2.64)	2.64
Resolver (R-)	N	AKM1	1	65536 (0.330)	15
		AKM2-8			8
SFD (C-)	Y	AKM1	16,777,216 (0.00129 arc-min)	N/A	16
		AKM2-8			9
Endat 2.1[1] (DA)	Y	AKM2-4	512	134,217,728 (0.000161)	1.0
		AKM5-8	2048		0.333
Endat 2.1Multi-turn[1,2] (DB)	Y	AKM2-4	512	134,217,728 (0.000161)	1.0
		AKM5-8	2048		0.333
BiSS[1] (AA)	Y	AKM2-8	2048	134,217,728 (0.000161)	0.60
BiSS Multi-turn[1,2] (AB)	Y	AKM2-8	2048	134,217,728 (0.000161)	0.60
Inductive enc.[1] (LA)	Y	AKM2,3	16	1,048,576 (0.0206)	8
		AKM4-7	32	2,097,152 (0.0103)	4.66
Inductive enc. Multi-turn[1,2](LB)	Y	AKM2,3	16	1,048,576 (0.0206)	8
		AKM4-7	32	2,097,152 (0.0103)	4.66

Note 1: Not available for AKM1.
Note 2: Provides 4096 turns of absolute positioning.
Note 3: These feedback devices include electronic motor nameplate data allowing plug-and-play commissioning, eliminating the need for drive parameter set-up and servo loop tuning in most applications.
Note 4: AKD interpolation for sinusoidal feedback devices is 2^{16}, however the resulting usable resolution for positioning may be much less for very high resolution systems.

Servomotor Feedback Combinations

AKM Family of Servomotors with Smart Feedback Device (SFD)

The SFD Feedback communicates with the drive over a four-wire interface. Two wires supply +5V power at <150 mA and the second pair is an RS-485 digital communications link. The device includes EEPROM memory to save motor parameters.

Angle Measurement:

Resolution: 2^{24} = 16,777,216 counts per rev
= 0.0013 arc-min
Accuracy: < ± 0.75 arc-min electrical + sensor error
Size 10 sensor ± 16 arc-min net (AKM 1)
Size 15 sensor ± 9 arc-min net (AKM 2,3,4)
Size 21 sensor ± 9 arc-min net (AKM 5,6,7)
Electrical Noise: < 2^{-17} Rev rms at full bandwidth
Bandwidth: > 2000 Hz at -3 dB
> 1000 Hz at -45° phase lag
Max Tracking Rate: > 50,000 RPM
Velocity Ripple: < 0.2% p-p electronics only
Size 10 sensor < 2.5% p-p net (AKM 1)
Size 15 sensor < 1.5% p-p net (AKM 2,3,4)
Size 21 sensor < 1.5% p-p net (AKM 5,6,7)
Velocity Noise: < 4 RPM rms at full bandwidth

Digital Communications:

Baud Rate: 2.5 MBaud
Signaling: RS-485 differential, 8 bit data with odd parity compatible with standard UARTs
Update Period: Once every 51.2 uSec new position sample
Error Detection: 5 bit CRC in addition to parity check
EEPROM Memory: Does a data dump when the unit powers up.

Power Supply:

Supply at Drive: 5.0 V ± 0.25 V (±5%)
Supply at SFD in motor: 4.25 V to 5.25 V
Nominal Supply Current: 120 mA
Worst Case Supply: 150 mA
Cable Resistance: +5V, Rtn: < 3.3 Ohm net

Environmental:

Operating Ambient: -20 to 120° C
Humidity: 10% to 90% non-condensing
Storage Temperature: -40 to 135°C

Resolver (Feedback)

Resolver Data	Units	AKM 1	AKM 2, 3, 4	AKM 5, 6, 7, 8
Type		1 Speed	1 Speed	1 Speed
Input Voltage	V_{RMS}	7.0	7.0	7.0
	k Hz	10	10	10
Input Current Max.	mA	30	50	50
Transformation Ratio	10%	0.5	0.5	0.5
Null Voltage	mV_{RMS}	50	30	30
Max. Error (pk-pk)	MINS.	30	18	18
Phase Shift	Degrees	-9	0	0
Operating Temperature	°C	-55° to 155°	-55° to 155°	-55° to 155°
Rotor Inertia Max.	kg-cm^2	0.002	0.046	0.497

Resolver Alignment

With positive DC current into phase W and out of phase V (U floats) the resolver is aligned to electrical ±5 counts. ie. Voltage S1-S3 set to null voltage S2-S4 max in phase with reference (R1-R2).

Resolver Winding Configuration

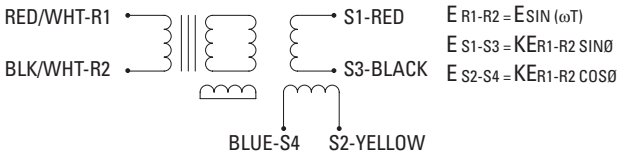

Servomotor Feedback Combinations

Commutating Encoder Option

Commutating Encoder

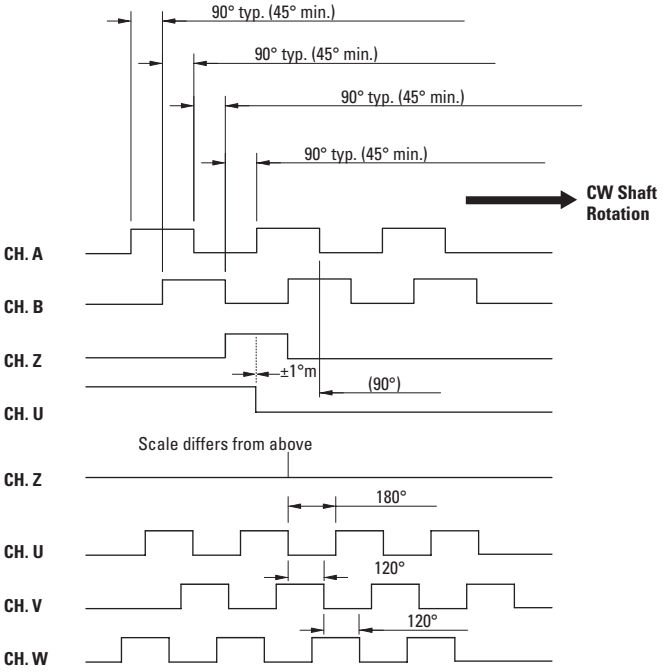

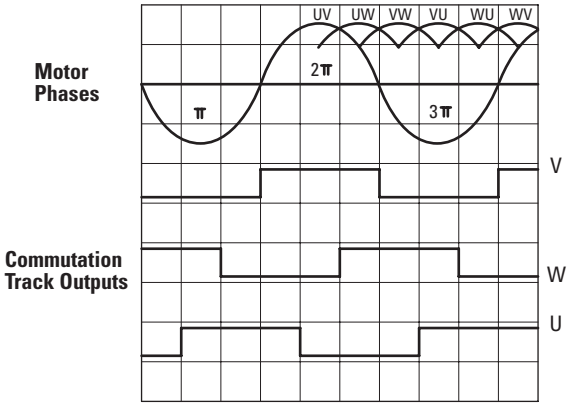

Max. Misalignment between rising edge of commutation track V & zero crossing of back EMF UV <= 5° electrical.

Motor Connections

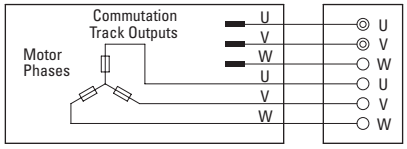

Output Comm: Open Collector W 2.2 k OHMS
ExternalL Pull Ups
(SINK 8 mA MAX.)

Parameter	Units	1- (AKM1-8)	2- (AKM1-8)	ED (AKM2-8)	EE (AKM2-8)	EF (AKM2-4)	EF (AKM5-8)	EG (AKM2-8)	EM (AKM2-8)	EH (AKM2-8)	EN (AKM5-8)	EJ (AKM5-8)
Input Voltage	Vdc ±10%	5										
Output Data		26LS31 Diff. Line Driver. Sink/Source 40mA Max										
Line Count		1,024	2,048	500	1,000	2,000	2,000	2,500	4,096	5,000	8,192	10,000
Frequency Response	KHz	200	200	200	200	200	200	200	500	500	1000	1000
Max. Speed	RPM	12,000	12,000	12,000	12,000	12,000	7,500	12,000	7,324	8,000	3,662	3,000
Min. Edge Separation of Incremental Channel	°e MIN.	45										
Index to U Comm Channel		±/-1°m Index Center To U Falling Edge										
Index Pulse Width		Gated With B Low										
Incremental Channel Accuracy		±1 Arc Min. (AKM2-8), ±2.5 Arc Min. (AKM1) Max. Edge to Edge										
Max. Acceleration	Rad/s²	100,000										
Operating Temperature	°C	0-120										
Storage Temperature	°C	0-120		-40 - 120								

	Type	AKM1	AKM2	AKM3	AKM4	AKM 5, 6, 7, 8
Commutating Channel	All Models	6 Pole 60°m ±6 Min.	6 Pole 60°m ±6 Min.	8 Pole 45°m ±6 Min.	10 Pole 36°m ±6 Min.	10 Pole 36°m ±6 Min.
Moment of Interia (kg-cm²)	1-,2-	0.0016	0.0048	0.0048	0.0048	0.0275
	All Ex Models	NA	0.0048	0.0048	0.0048	0.0275

Absolute Sine Encoder Options

Encoder Alignment

With positive DC current into phase W and out of phase V (U floats) the encoder is aligned to ±1 electrical degree[1].

EnDat Optical

Type		Single-Turn "DA"		Multi-Turn "DB"	
Frame Size		AKM 2, 3, 4	AKM 5, 6, 7, 8	AKM 2, 3, 4	AKM 5, 6, 7, 8
Cycles Per Revolution		512	2048	512	2048
Input Voltage	Vdc ±5%	5	5	5	5
Current Consumption	mA MAX.	160	150	200	250
Operating Temperature	°C MIN/MAX	-20/115	-20/115	-20/115	-20/115
Inertia	kg-cm^2	0.040	0.260	0.040	0.260
Output Interface		HEIDENHAIN EnDat			
Type		ECN1113	ECN1313	EQN1125	EQN1325

EnDat Inductive

Type		Single-Turn "LA"		Multi-Turn "LB"	
Frame Size		AKM 2, 3	AKM 4, 5, 6, 7	AKM 2, 3	AKM 4, 5, 6, 7
Cycles Per Revolution		16	32	16	32
Input Voltage	Vdc ±5%	5	5	5	5
Current Consumption	mA MAX.	160	170	190	170
Operating Temperature	°C MIN/MAX	-20/115	-20/115	-20/115	-20/115
Inertia	kg-cm^2	0.0076	0.022	0.0076	0.022
Output Interface		HEIDENHAIN EnDat			
Type		ECI 1118	ECI1319	EQI 1130	EQI1331

BiSS Optical

Type		Single-Turn "AA"		Multi-Turn "AB"	
Frame Size		AKM 2, 3, 4	AKM 5, 6, 7, 8	AKM 2, 3, 4	AKM 5, 6, 7, 8
Cycles Per Revolution		2048	2048	2048	2048
Input Voltage	Vdc ±5%	5	5	5	5
Current Consumption	mA MAX.	45	70	85	100
Operating Temperature	°C MIN/MAX	-20/115	-20/115	-20/115	-20/115
Inertia	kg-cm^2	0.025	0.038	0.025	0.038
Output Interface		BiSS			
Type		AD36	AD58	AD36	AD58

Note 1: EnDat Inductive is aligned to +/- 3 electrical degrees

Brake Option

Failsafe, Holding Brake

The holding brake is designed to provide static holding torque to the motor shaft with the brake coil de-energized. The brake must first be released (coil energized) prior to commanding motor rotation as determined by its drop-out time. The brake is intended for holding or "parking" of a stationary motor. It is not intended for dynamic braking. There should be absolutely no motion of the rotor when power is removed from the brake coil.

AKM Motor Brake Specifications

Motor Family	Minimum Static Torque @120°C		Weight		Power Consumption @24V, 20°C	Current @24V, 20°C	Inertia		Closing Time (engage)	Opening Time (release)	Backlash	
											Maximum	Typical
	Nm	lb-in	Kg	lb	Watts ±7%	ADC	kg-cm²	lb-in-sec²	msec	msec	deg.	deg.
AKM2	1.42	12.6	0.27	0.59	8.4	0.35	0.011	0.97E-05	36	35	1.01	0.46
AKM3	2.5	22.1	0.35	0.77	10.1	0.42	0.011	0.97E-05	20	50	1.01	0.46
AKM4	5.3	46.9	0.63	1.39	12.8	0.53	0.068	6.02E-05	30	75	0.81	0.37
AKM5	14.5	128	1.1	2.42	19.5	0.82	0.173	1.53E-04	30	115	0.71	0.31
AKM6	25	221	2	4.4	25.7	1.07	0.605	5.35E-04	40	155	0.51	0.24
AKM7	53	469	2.9	6.38	35.6	1.48	1.64	1.46E-03	70	170	0.44	0.20
AKM8	150	1330	8	17.5	49	2.04	5.53	4.90E-03	100	300	0.44	0.20

Note 1: Contamination of the motor internal compartment by oil or other foreign materials will result in failure of the brake. Check the suitability of motor sealing for the working environment.
Note 2: Operating Voltage: 24 Vdc ± 10%.
Note 3: Maximum backlash is calculated using worst-case tolerancing, and typical backlash is calculated using statistical tolerancing.

Servomotor Connector Options

B, C, G, H, & T Power Connectors

B, C- Connector

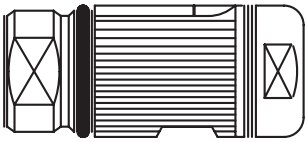

Cable Option (AKM 1& 2 Only)
Connector Part Number:
BKUA-199-NN-00-11-0035-000
(For AKM 1 & 2)

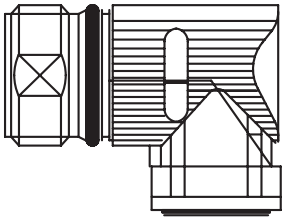

Motor Mounted Option
Connector Part Number:
BEDC-089-NN-00-00-0005-000

G- Connector

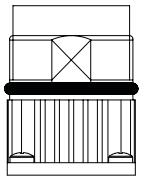

Motor Mounted Option
Connector Part Number:
BEDC-089-NN-00-00-0011-000
(AKM 2, 3, 4, 5, 6 & 7)

Power Connector (View Facing Front)

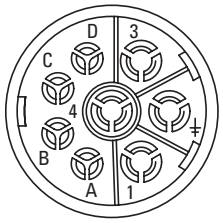

Pin	Function	Color
1	U	Blue
‡	PE	Grn/Yel
3	W	Violet
4	V	Brown
A	Brake +	Black
B	Brake -	Black
C	N/C	
D	N/C	

Shield Connected to Motor
Ground Internal to Motor
(For AKM 1 & 2)

Suggested Mating Connector
Intercontec BSTA-108-NN-00-08-0036-000

H- Connector

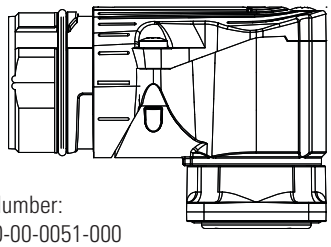

Connector Part Number:
CEDE-270-NN-00-00-0051-000

Power Connector (View Facing Front)

Pin	Function	Color
U	U	Blue
‡	PE	Grn/Yel
W	W	Violet
W	V	Brown
+	Brake +	Black
-	Brake -	Black

Suggested Mating Connector
Intercontec CSTA-263-NN-00-45-0001-000

Shield Connected to Motor
Ground Internal to Motor

T- Connector

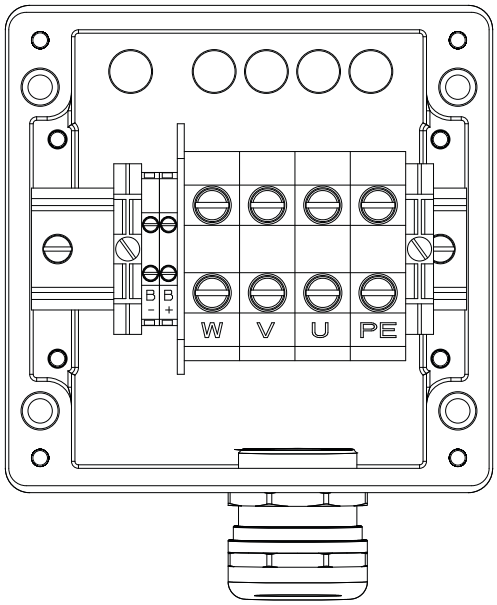

Terminal Box AKM8 Only

Servomotor Connector Options

B, C, G, H, & T Feedback Connectors

SFD Feedback (View Facing Front)

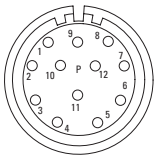

Connector Part Number:
AKUA-020-NN-00-09-0035-000 (For AKM 1 & 2)
AEDC-052-NN-00-00-0012-000 (For AKM 2, 3, 4, 5, 6, 7, & 8)

Pin	Function	Color
1	SFD +5V	Red
2	SFD +5V RTN	Black
3	SFD COM-	Yellow
4	SFD COM+	Blue
5	SFD COM Shield (AKM 1, 2)	
6	N/C	
7	N/C	
8	N/C	
9	N/C	
10	N/C	
11	N/C	
12	N/C	

Shield is Not Connected at Motor End

Suggested Mating Connector
Intercontec ASTA-021-NN-00-10-0035-000

Commutating Encoder (View Facing Front)

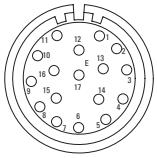

Connector Part Number:
AKUA-034-NN-00-09-0035-000 (For AKM 1 & 2)
AEDC-113-NN-00-00-0012-000 (For AKM 2, 3, 4, 5, 6, & 7)

Pin	Function	Color
1	B	Green
2	$\overline{B}$	Grn/Blk
3	A	Blue
4	$\overline{A}$	Blue/Blk
5	Z	Violet
6	$\overline{Z}$	Violet/Blk
7	Gnd	Black
8	Thermal Sensor +	Orange
9	Thermal Sensor –	Orange/White
10	Vcc	Red
11	N/C	
12	N/C	
13	N/C	
14	N/C	
15	U	Brown
16	V	Grey
17	W	White

Shield is Not Connected at Motor End
On motor mounted connectors, the thermal sensor lead colors are (+) Blue, (–) Black.

Suggested Mating Connector
Intercontec ASTA-035-NN-00-10-0035-000

B, C, G, H, & T Feedback Connectors

Resolver (View Facing Front)

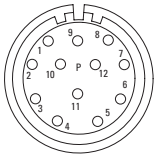

Connector Part Number:
AKUA-020-NN-00-09-0035-000 (For AKM 1 & 2)
AEDC-052-NN-00-00-0012-000 (For AKM 2, 3, 4, 5, 6, 7, & 8)

Pin	Function	Color
1	N/C	
2	Thermal Sensor +	Orange
3	S4, COS-	Blue
4	S3, SIN-	Black
5	R2, REF-	Blk/Wht
6	Thermal Sensor –	Orange/White
7	S2, COS+	Yellow
8	S1, SIN+	Red
9	R1, REF+	Red/Wht
10	N/C	
11	N/C	
12	N/C	

Shield is Not Connected at Motor End
On motor mounted connectors, the thermal sensor lead colors are (+) Blue, (–) Black.

Suggested Mating Connector
Intercontec ASTA-021-NN-00-10-0035-000

"AA" & "AB" Absolute Encoder (View Facing Front)

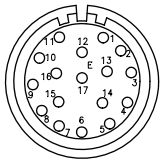

Connector Part Number:
AEDC-113-NN-00-00-0012-000 (For AKM 3, 4, 5, 6, & 7)

Pin	Function	Color
1	B-	Red/Blk
2	Gnd	Wht/Blk
3	A-	Yel/Blk
4	Vcc (5Vdc)	Brn/Grn
5	Data	Gray
6	N/C	
7	Thermal Sensor+	Green
8	Clock	Violet
9	B+	Blu/Blk
10	Un Sense (Common)	White
11	A+	Grn/Blk
12	Up Sense (VCC)	Blue
13	$\overline{\text{Data}}$	Pink
14	Thermal Sensor-	Brown
15	$\overline{\text{Clock}}$	Yellow
16	N/C	
17	N/C	

Shield is Not Connected at Motor End

Suggested Mating Connector
Intercontec ASTA-035-NN-00-10-0035-000

"DA" & "DB" Absolute Encoder (View Facing Front)
"LA" & "LB" Absolute Encoder (Inductive)

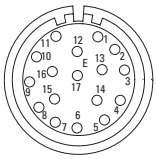

Connector Part Number:
AKUA-034-NN-00-09-0035-000 (For AKM 2)
AEDC-113-NN-00-00-0012-000 (For AKM 3, 4, 5, 6, 7 & 8)

Pin	Function	Color	
		AKM2	AKM3. 4. 5. 6. 7, 8 (Motor-mounted connector)
1	B-	Red/Blk	Red/Blk
2	GND	Wht/Grn	Wht/Grn
3	A-	Yel/Blk	Yel/Blk
4	Vcc (5Vdc)	Brn/Grn	Brn/Grn
5	Data	Gray	Gray
6	N/C		
7	Thermal Sensor +	Green	Blue
8	Clock	Violet	Violet
9	B+	Blu/Blk	Blu/Blk
10	Un Sense (common)	White	White
11	A+	Grn/Blk	Grn/Blk
12	Up Sense (VCC)	Blue	Blue
13	$\overline{\text{Data}}$	Pink	Pink
14	Thermal Sensor-	Brown	Black
15	$\overline{\text{Clock}}$	Yellow	Yellow
16	N/C		
17	N/C		

Shield is Not Connected at Motor End

Suggested Mating Connector
Intercontec ASTA-035-NN-00-10-0035-000

Option "DA" = Single-Turn Absolute
Option "DB" = Multi-Turn Absolute

Mating Connector Kits
(For Use On Motors With "C & G" Connectors Only)

Connector Part Number: BEDC-089-NN-00-00-0005-000

Resolver	CKT-T1A-SRE	CKT-T1B-SRE
Encoder	CKT-T1A-SCE	CKT-T1B-SCE

Mating Connector Kits Include Both Power and Feedback Connectors.

Servomotor Connector Options

"M" Connector Options

(AKM 1, 2, 3 & 4 Only) If additional dimensions or connectors are required, contact Kollmorgen Customer Support.

Power Connector (Non Brake, View Facing Front)

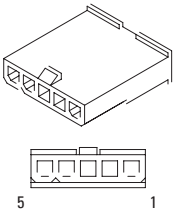

Connector Part Number: Molex 39-01-4056 (Eng No. 5559-05P3)

Pin	Function	Color
1	U	Blue
2	V	Brown
3	W	Violet
4	Gnd	Grn/Yel
5	Shield	

Shield Connected to Motor
Ground Internal to Motor

Suggested Mating Connector
Molex 39-01-4050

SFD (View Facing Front)

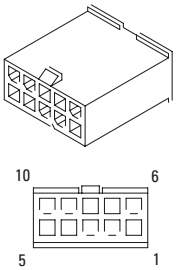

Connector Part Number: Molex 43020-1001

Pin	Function	Color
1	SFD +5V	Red
2	SFD +5V RTN	Black
3	SFD COM-	Yellow
4	SFD COM+	Blue
5	SFD COM Shield	
6	N/C	
7	N/C	
8	N/C	
9	N/C	
10	N/C	

Shield is Not Connected at Motor End

Suggested Mating Connector
Molex 43025-1000

Resolver (View Facing Front)

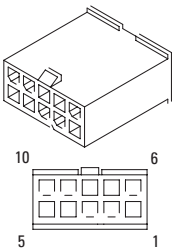

Connector Part Number: Molex 43020-1001

Pin	Function	Color
1	N/C	
2	Thermal Sensor +	Orange
3	S4, COS-	Blue
4	S3, SIN-	Black
5	R2, REF-	Blk/Wht
6	Thermal Sensor –	Orange/White
7	S2, COS+	Yellow
8	S1, SIN+	Red
9	R1, REF+	Red/Wht
10	Shield	

Shield is Not Connected at Motor End

Suggested Mating Connector
Molex 43025-1000

Power Connector (Brake, View Facing Front)

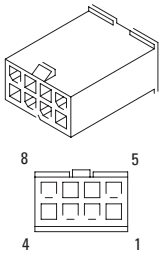

Connector Part Number:
Molex 39-01-3083 (Eng No. 5559-08P1)

Pin	Function	Color
1	U	Blue
2	V	Brown
3	W	Violet
4	Gnd	Grn/Yel
5	Shield	
6	Brake+	Black
7	Brake-	Black
8	N/C	

Shield Connected to Motor
Ground Internal to Motor

Suggested Mating Connector
Molex 39-01-2080

Commutating Encoder (View Facing Front)

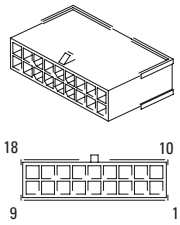

Connector Part Number: Molex 43020-1801

Pin	Function	Color
1	B	Green
2	$\overline{B}$	Grn/Blk
3	A	Blue
4	$\overline{A}$	Blue/Blk
5	Z	Violet
6	$\overline{Z}$	Violet/Blk
7	Gnd	Black
8	Thermal Sensor +	Orange
9	Thermal Sensor –	Orange/White
10	Vcc	Red
11	N/C	
12	N/C	
13	N/C	
14	N/C	
15	U	Brown
16	V	Grey
17	W	White
18	Shield	

Shield is Not Connected at Motor End

Suggested Mating Connector
Molex 43025-1800

"M" Connector Options

(AKM 1, 2, 3 & 4 Only) If additional dimensions or connectors are required, contact Kollmorgen Customer Support.

"DA" & "DB" Absolute Encoder (View Facing Front)
"LA" & "LB" Absolute Encoder (View Facing Front)

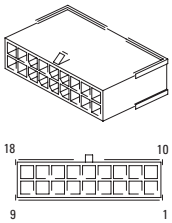

Connector Part Number: Molex 43020-1801

Pin	Function	Color
1	B-	Red/Blk
2	Gnd	Wht/Blk
3	A-	Yel/Blk
4	Vcc (5Vdc)	Brn/Grn
5	Data	Gray
6	N/C	
7	Thermal Sensor+	Green
8	Clock	Violet
9	B+	Blu/Blk
10	Un Sense (Common)	White
11	A+	Grn/Blk
12	Up Sense (VCC)	Blue
13	$\overline{\text{Data}}$	Pink
14	Thermal Sensor-	Brown
15	$\overline{\text{Clock}}$	Yellow
16	N/C	
17	N/C	
18	Shield	

Shield is Not Connected at Motor End

Suggested Mating Connector
Molex 43025-1800

"AA" & "AB" Absolute Encoder (View Facing Front)

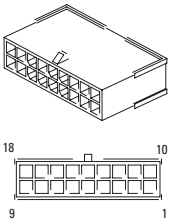

Connector Part Number: Molex 43020-1801

Pin	Function	Color
1	B-	Red/Blk
2	Gnd	Wht/Blk
3	A-	Yel/Blk
4	Vcc (5Vdc)	Brn/Grn
5	Data	Gray
6	N/C	
7	Thermal Sensor+	Green
8	Clock	Violet
9	B+	Blu/Blk
10	Un Sense (Common)	White
11	A+	Grn/Blk
12	Up Sense (VCC)	Blue
13	$\overline{\text{Data}}$	Pink
14	Thermal Sensor-	Brown
15	$\overline{\text{Clock}}$	Yellow
16	N/C	
17	N/C	
18	N/C	

Shield is Not Connected at Motor End

Suggested Mating Connector
Molex 43025-1800

Servomotor Connector Options

"D" Connector Options

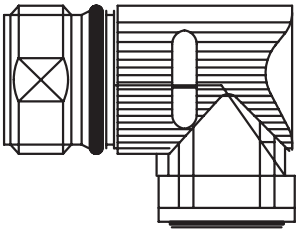

Motor Mounted Option (AKM 2, 3 & 4 Only)

Combined Power & SFD Feedback (View Facing Front)

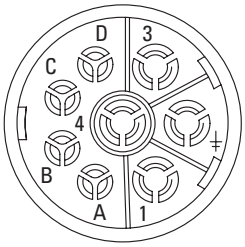

Connector Part Number: BEDC-089-NN-00-00-0005-000

Pin	Function	Color
1	U	Blue
‡	PE	Grn/Yel
3	W	Violet
4	V	Brown
A	SFD +5V	Red
B	SFD +5V RTN	Black
C	SFD COM-	Yellow
D	SFD COM+	Blue

Suggested Mating Connector
Intercontec BSTA-108-NN-00-08-0036-000

"P" Connector Options

(AKM 1, 2, 3 & 4 Only)

Combined Power & SFD Feedback (Not Available for Brake Motors, View Facing Front)

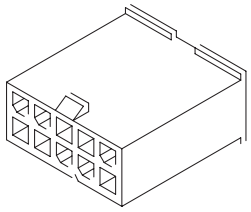

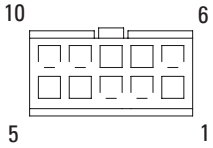

Connector Part Number: Molex 39-01-3103 (Eng No. 5559-10P1)

Pin	Function	Color
1	SFD +5V	Red
‡	SFD +5V RTN	Black
3	Power Shield	
4	Ground	Grn/Yel
5	U	Blue
6	SFD COM-	Yellow
7	SFD COM+	Blue
8	SFD COM Shield	
9	V	Brown
10	W	Violet

Power Shield Connected to Motor Ground Internal to Motor

Feedback Shield is Not Connected at Motor End

Suggested Mating Connector
Molex 39-01-2100

Model Nomenclature

AKM Brushless Servomotor

AKM 4 2 E – A N C N C- 00

AKM Series

Motor Frame Size
1, 2, 3, 4, 5, 6, 7, 8

Rotor Stack Length
1, 2, 3, 4, 5

Winding Type
A, B, C, D, etc.
S = Special

Mount
A = International standard mount
B = NEMA mount
C = Alternative standard mount
D = Alternative standard mount
E = Alternate NEMA mount
M = "A mount" with reinforced bearing, AKM8
S = Special
T = "C mount" with reinforced bearing, AKM8

Shaft
C = Closed keyway
K = Open keyway
N = Smooth shaft
S = Special

Customizaton/Seal
00 = Standard motor without shaft seal
01 = Standard motor with Teflon shaft seal
HG = Standard motor with Viton spring lip shaft seal
0F = Food grade
0W = Washdown
Other numbers will be assigned for special motors.

Feedback Device
1- = 1024 PPR digital encoder with commutation (AKM1-7)
2- = 2048 PPR digital encoder with commutation (AKM1-7)
C- = Smart Feedback Device (SFD) (available across family)
R- = Resolver
AA = BiSS single-turn absolute (AKM2-8)
AB = BiSS multi-turn absolute (AKM2-8)
DA = Single-turn absolute sine encoder (EnDat2.2, 01) (AKM2-8)
DB = Multi-turn absolute sine encoder (EnDat2.2, 01) (AKM2-8)
ED = 500 PPR digital encoder w/ commutation (AKM2-7)
EE = 1000 PPR digital encoder w/ commutation (AKM2-7)
EF = 2000 PPR digital encoder w/ commutation (AKM2-7)
EG = 2500 PPR digital encoder w/ commutation (AKM2-7)
EM = 4096 PPR digital encoder w/ commutation (AKM2-7)
EH = 5000 PPR digital encoder w/ commutation (AKM2-7)
EN = 8192 PPR digital encoder w/ commutation (AKM 5, 6,7 models only)
EJ = 10000 PPR digital encoder w/ commutation (AKM 5, 6,7 models only)
LA = Inductive single-turn (AKM2-7)
LB = Inductive multi-turn absolute (AKM2-7)

Brake
2 = 24 Vdc brake (AKM2-8)
N = No brake
S = Special

Connectors
B = Dual motor-mounted rotatable IP65 connectors (AKM2 only)
C = 0.5 m shielded cables with IP65 connectors (AKM1, 2), motor-mounted rotatable IP65 connectors (AKM3-7)
D = Single angular connector (AKM2, 3, 4)
G = Straight motor-mounted IP65 connectors (AKM2-7)
H = Motor-mounted IP65 power connector size 1.5 (AKM74Q & AKM82 only)
M = 0.5 m shielded cable w/ IP20 connector (AKM1, 2, 3, 4 models, less than 6 amps)
P = 0.5 m shielded cable w/single IP20 connector (AKM1, 2, 3, 4 models with SFD and no brake, less than 6 amps)
S = Special
T = Terminal box for power and feedback connector size 1.0 (AKM8 only)

Model Nomenclature

AKD Servo Drive

AKD – B 003 06 – NB AN – 0000

AKD Series

Version

B = Base drive

C = Central power supply for AKD-N (Requires CB Extention)

N = Decentralized drive (Requires DB, DF, or DS Extention)

P = Position indexer (motion tasking)

T = AKD BASIC Language Programmable drive (Requires IC or NB Extention)

M = Multi-axis Master Drive (Requires MC Extension option, and EC Connectivity option)

Current Rating

003 = 3 Amp

006 = 6 Amp

010 = 10kW (With Version C, this field refers to power.)

012 = 12 Amp

024 = 24 Amp

Voltage

06 = 120/240 Vac 1∅/3∅ (24 Amp Drive: 240 Vac 3∅ only)

07 = 240/480 Vac 3∅ (Version C: 07 = 400/480 Vac 3∅ I Version N: 07 = 560/680 Vdc)

Extension

CB = without extention

DB = hybrid motor cable

DF = additional EtherCAT port + feedback connector

DS = local STO + feedback connector

IC = Expanded I/O version and SD card slot ("T" version drive only)

NB = Without extensions

Connectivity*

Connectivity*	Drive Version Availability
AN = Analog command	B, P, T
CC = CANopen OR EtherCAT	P
CN = CANopen	P
EC = EtherCAT	C, M, N, P
EI = EtherNet/IP	P
PN - PROFINET	P
SQ = SynqNet	B

*Motion Tasking is included as a free upgrade with CC, CN, EC, EI and PN

Variants

0000 = Standard

Note: Options shown in bold blue text are considered standard.

S700 Servo Drive

S7 48 0 2 – NA – NA – NA

S700 Series

Current Rating

01 = 1.5 Arms
03 = 3 Arms
06 = 6 Arms
12 = 12 Arms
24 = 24 Arms
48 = 48 Arms
72 = 72 Arms

Voltage Rating

0 = 208...480 Vac
6 = 110...230 Vac (with 1.5 to 24 Arms only)

Electrical Options

2 = Standard

Expansion Card Slot 3

NA = No Expansion card in Slot 3
EtherCAT and CANopen on board
F2 = Fan controller
PM = Post/O
PA = Post/O-Monitor
S1 = Safety card SIL 3
S2 = Safety card SIL 2

Expansion Card Slot 2

NA = No Expansion card in Slot 2
EtherCAT and CANopen on board
F2 = Fan controller
PM = Post/O
PA = Post/O-Monitor

Expansion card F2 in Slot 2 can be used combined with a card in Slot 1.

Expansion Card Slot 1

NA = No expansion card in Slot 1,
EtherCAT and CANopen on board
DN = DEVICENET
PB = PROFIBUS
SE = SERCOS
SN = SYNQNET
EI = I/O extension

Expansion card F2 in Slot 2 can be used combined with a card in Slot 1.

Note: Options shown in bold blue text are considered standard.

Notes

MOTIONEERING® Application Engine

To help select and size Kollmorgen components, this Windows®-based motor-sizing program takes a systems approach to the selection of brushless DC servomotors, stepper motors and drives. MOTIONEERING application engine, available at www.kollmorgen.com, uses a project concept for the collection and saving of rotary and linear multi-axis load information. This provides the user the flexibility to sum the effects of multiple axes of motion for power supply and shunt regeneration sizing.

A wide variety of linear and rotary mechanisms are provided including lead screw, rack and pinion, conveyor, nip rolls, cylinder, rotary, and direct data-entry using unique sizing algorithms and product databases criteria.

The searchable database consists of hundreds of systems on product combinations including rotary housed and frameless brushless servomotors, direct drive rotary and linear brushless servomotors, linear actuators (electric cylinders, rodless actuators, and precision tables) and stepper systems.

The MOTIONEERING application engine also provides versatile units-of-measure selection options for mechanism and motion profile data-entry, with the ability to convert data into other available units. Online Help explains program functions and the definition of terms and equations used in the program.

Features

- Group multiple mechanisms within a "project" – organize and combine data for power supply and regeneration sizing
- Types of mechanisms for analysis include lead screw, rack and pinion, conveyor, nip rolls, rotary and direct drive linear motor
- Motion profile options include simple triangle, 1/3-1/3-1/3 trapezoidal, variable traverse trapezoidal, and more
- Search results display shows color highlighted solution set of options for easy evaluation of system specifications and selection

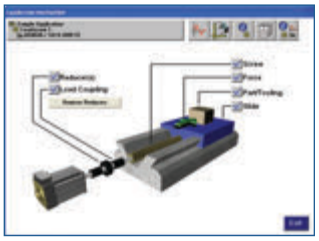

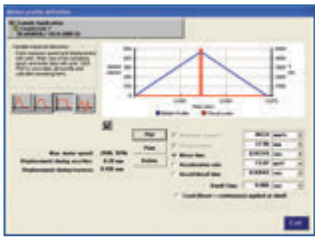

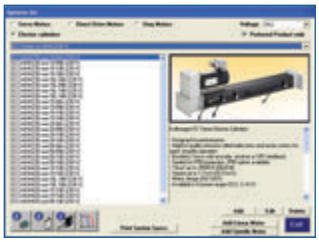

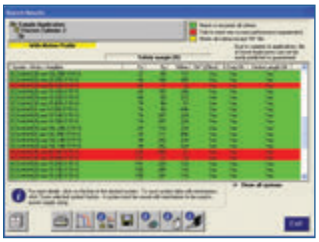

Supported Operating Systems

- Microsoft® Windows 2000, XP, Vista, Windows 7

MOTIONEERING 6.4.0 includes

- ***NEW*** AKMH series Stainless Steel Motors and AKD systems at 120, 240, 400 and 480 V
  - Designed to meet IP69K, EHEDG, 3A, and built with FDA approved food grade materials
  - 19 frame/stack length combinations
  - Continuous torque to 22 Nm
  - Peak torque to 92 Nm
- Corrected length dimensions of some AKM servomotor & gearmotor models
- Corrected CH132 thermal resistance
- Added HIPERFACE DSL sine encoder to search field

Note: Performance curves included for all servomotor systems

About Kollmorgen

Kollmorgen is a leading provider of motion systems and components for machine builders. Through world-class knowledge in motion, industry-leading quality and deep expertise in linking and integrating standard and custom products, Kollmorgen delivers breakthrough solutions that are unmatched in performance, reliability and ease-of-use, giving machine builders an irrefutable marketplace advantage.

For assistance with your application needs in North America, contact us at: 540-633-3545, support@kollmorgen.com or visit www.kollmorgen.com for a global contact list.

- Application Centers
- Global Design & Manufacturing
- Global Manufacturing

KOLLMORGEN®

Because Motion Matters™

Kollmorgen
203A West Rock Road
Radford, VA 24141 USA
Phone: 1-540-633-3545
Fax: 1-540-639-4162

Kollmorgen Europe GmbH
Pempelfurtstraße 1
40880 Ratingen
Germany
Phone: +49 (0) 2102 9394 0
Fax: +49 (0) 2102 9394 3155

Kollmorgen Asia
China
Rm 2205, Scitech Tower
22 Jianguomen Wai Street
Phone: +86 400 666 1802
Fax: +86 10 6515 0263

Kollmorgen Aerospace and Defense
501 West Main Street
Radford, VA 24141 USA
Phone: 1-540-731-5668
Fax: 1-540-731-5679

© 2014 Kollmorgen Corporation. All rights reserved. KM_SG_00077_RevB_EN

Specifications are subject to change without notice. It is the responsibility of the product user to determine the suitability of this product for a specific application. All trademarks are the property of their respective owners.