MODEL NO.	"L"	P/N
IAM.751S	305 [12]	20193
IAM.753.5S	1067 [42]	17927
IAM.753S	914 [36]	17926
IAM.754S	1219 [48]	20559
IAM.755S	1524 [60]	20278
IAM.756S	1829 [72]	20438
IAM.757S	2124 [84]	21012
IAM.758S	2438 [96]	20733
IAM.752S	610 [24]	17304

NOTE - M600 SUFFIX INDICATES FIBER POTTED ON PROBE END
WITH EPOXY THAT OPERATES IN MAX. TEMPERATURE OF 600° F

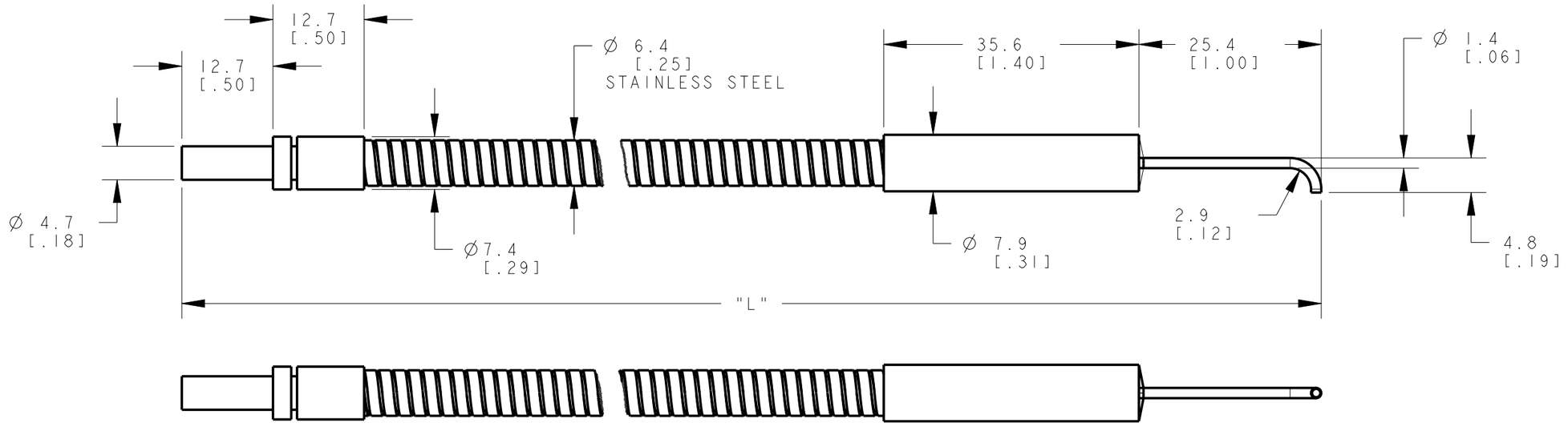

NOTES:
1. ALL DIMENSIONS ARE MILLIMETERS [INCHES] UNLESS OTHERWISE NOTED.
2. REFER TO "www.bannerengineering.com" FOR ADDITIONAL DATA AND SPECIFICATIONS.

This drawing is the property of BANNER ENGINEERING CORP. Any use or reproduction, in any form, without prior written permission of Banner is prohibited.
© 2015 Banner Engineering Corp.

THIRD ANGLE PROJECTION

BANNER ENGINEERING CORP.
www.bannerengineering.com

TITLE

IAM.752 SERIES

SIZE	DRAWING NO.	REV.
B	193313	A
SCALE 3:2	SHEET 1 OF 2	

CREO

REVISION HISTORY			
REV	DESCRIPTION	DATE	APPROVED

MODEL NO.	"L"	"PL"	"AL"	"R"	P/N
IAM.753SM4.5X.6	36	4.59	.62	.29	21408
IAM.752SMA.30	24	1.0	.30	.12	21582
IAM.753SMA.30	36	1.0	.30	.12	21846
IAM.751.1S	13	1.0	.19	.12	21924
IAM.751.2S	14	1.0	.19	.12	21925
IAM.752.3SM13X.3	28	13.5	.33	.12	21988
IAM.753S1.5X.19	36	1.5	.19	.12	22093
IAM.753SM8	36	8.0	.19	.12	22201
IAM.751.5S	18	1.0	.19	.12	22436
IAM.755SM8	60	8.0	.19	.12	22444
IAM.755SM11	60	11.0	.19	.12	22455
IAM.752SM1X.69	24	1.0	.69	.25	22551
IAM.75.8S	9	1.0	.19	.12	22622
IAM.753SMA.5	36	1.0	.50	.12	22767
IAM.752SM8M600	24	8.0	.19	.12	00000
IAM.752SM.5X.5	24	.50	.50	.12	00000
IAM.754.4S	53	1.0	.19	.12	22899
IAM.754.7S	56	1.0	.19	.12	22901
IAM.755.1S	61	1.0	.19	.12	22903
IAM.75.4S	5	1.0	.19	.12	00000
IAM.752SM1X1	24	1.0	1.00	.12	23011
IAM.753SM.4X.8	36	.40	.80	.12	23193
IAM.753SM600	36	1.0	.19	.12	23423
IAM.751SMA.5	12	1.0	.50	.12	00000
IAM.752SM2	24	2.0	.19	.12	83518
IAM.755SMA.4	60	1.0	.40	.12	24050
IAM.752SMA.65	24	1.0	.65	.12	24295
IAM.752SM2.5	24	2.5	.19	.12	24409
IAM.752SM5	24	5.0	.19	.12	24410
IAM.753SM1X1	36	1.0	1.00	.12	24656
IAM.753SM1X.625	36	1.0	.625	.12	24767

MODEL NO.	"L"	"PL"	"AL"	"R"	P/N
IAM.756SM1X1	72	1.0	1.00	.12	62287
IAM.753SMA.4	36	1.0	.40	.12	62308
IAM.751OS	120	1.0	.19	.12	70998
IAM.753SM.5X.75	36	.50	.75	.12	75327
IAM.751OSM600	120	1.0	.19	.12	80950
IAM.752SM4.5X.6	24	4.59	.62	.29	21305
IAM.757S	84	1.0	.19	.12	21012
IAM.752SM3.2X.19	24	3.2	.19	.12	20931
IAM.75.9SM.19X1	11	.19	1.0	.12	20749
IAM.752SM600	24	1.0	.19	.12	20550
IAM.752SM.250MCA	24	1.0	.25	.09	20385
IAM.752SM.08	24	1.0	.08	.09	20259
IAM.752SM3	24	3.0	.19	.12	21420
IAM.752SM4	24	4.0	.19	.12	21421
IAM.751.2S	144	1.0	.19	.12	10632
IAM.752SM2.1X.34	24	2.1	.34	.12	10739
IAM.751.5S	180	1.0	.19	.12	16188

Dimensions are
in Inches
TOLERANCES
(Unless Otherwise Specified)
X.X = ±.1"
.XX = ±.01"
.XXX = ±.005"
ANGLE = ±3°
"L" = .5"/Foot

BANNER ENGINEERING Corp.
9717 10th Ave. North
Minneapolis, MN 55441
Tel # 763-544-3164
Fax # 763-544-3573
www.bannerengineering.com

This drawing is the property of BANNER ENGINEERING Corp. and is proprietary in general and in detail. Its contents shall not be revealed to outside parties without the written consent of BANNER.

IAM.752 SERIES — GLASS FIBEROPTIC ASSEMBLY & MOD'S

11-12-88	2 OF 2	193313	***