ROHL
Authentic Luxury for Kitchen and Bath®

www.rohlhome.com

ACQUI COLUMN SPOUT WIDESPREAD LAVATORY FAUCET

ROHL Country Bath Collection

A1409LM (Metal Levers)
A1409LP (Porcelain Levers)
A1409XM (Cross Handles)
A1409LC (Swarovski® Crystal Levers)
A1409XC (Swarovski® Crystal Cross Handles)

FEATURES

- 1/ 4-turn ceramic valves
- Solid brass
- 3 x 1 3/ 8" cutouts
- 6 5/ 16" spout reach
- 1/ 2" NPT connectors
- Matching tub filler A1404X and A1414
- Fixed spout
- 15 3/ 4" maximum spread distance between valves
- 1.5 GPM

COLORS/FINISHES

- Polished Chrome
- Polished Nickel
- Satin Nickel
- Tuscan Brass
- Inca Brass

WARRANTY

- Limited Lifetime*

* No Warranty on Tuscan Brass Finish TCB

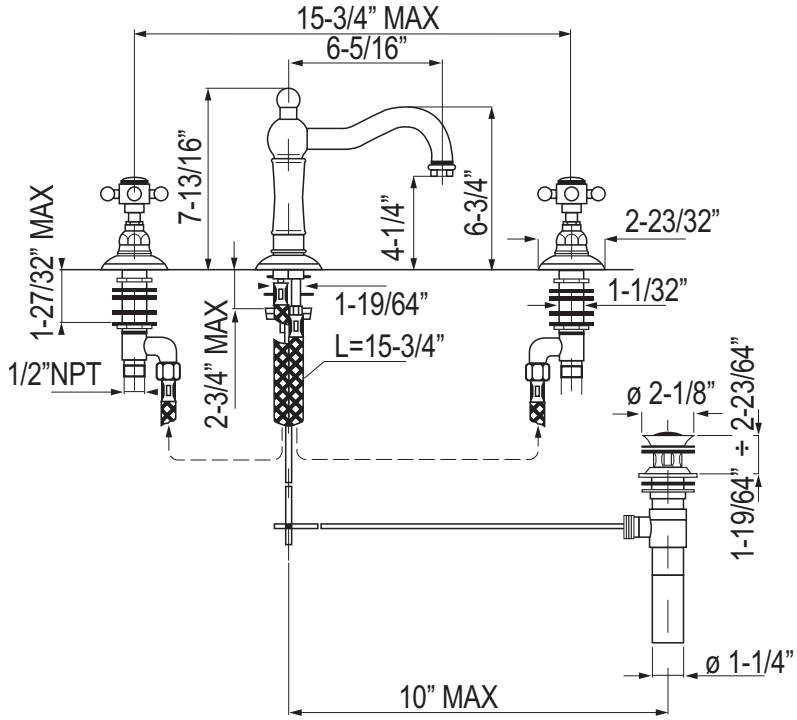

A1409XM

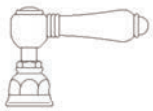

A1409LM & A1409LP

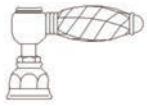

A1409LC

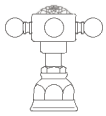

A1409XC

Consult your local ROHL showroom for additional information and specifications. For complete warranty details and a list of showrooms, go to www.rohlhome.com.

ROHL

Authentic Luxury for Kitchen and Bath®

www.rohlhome.com

A1409 Spare Parts

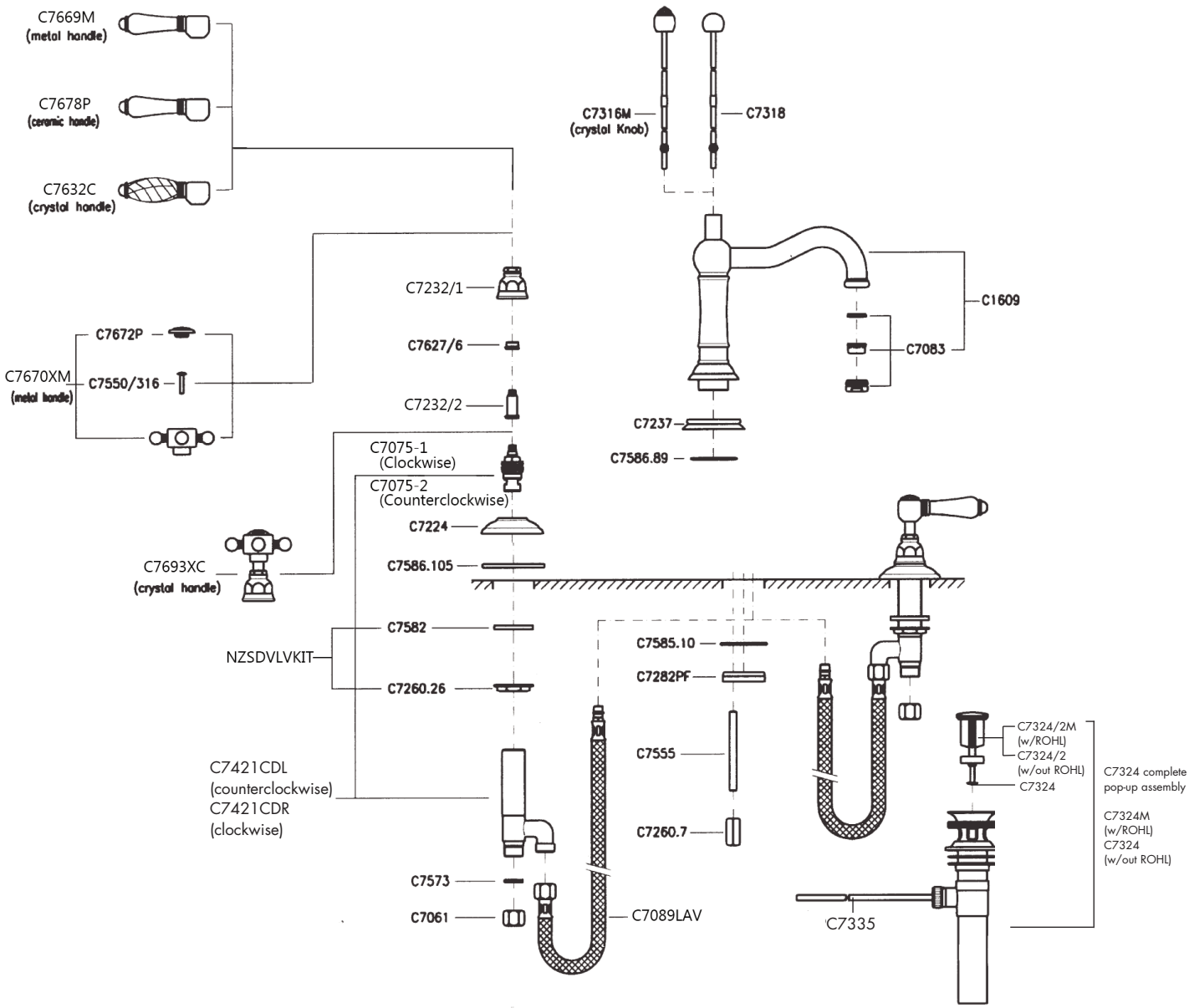

Consult your local ROHL showroom for additional information and specifications. For complete warranty details and a list of showrooms, go to www.rohlhome.com.