G-1045
Spout Connection Rough
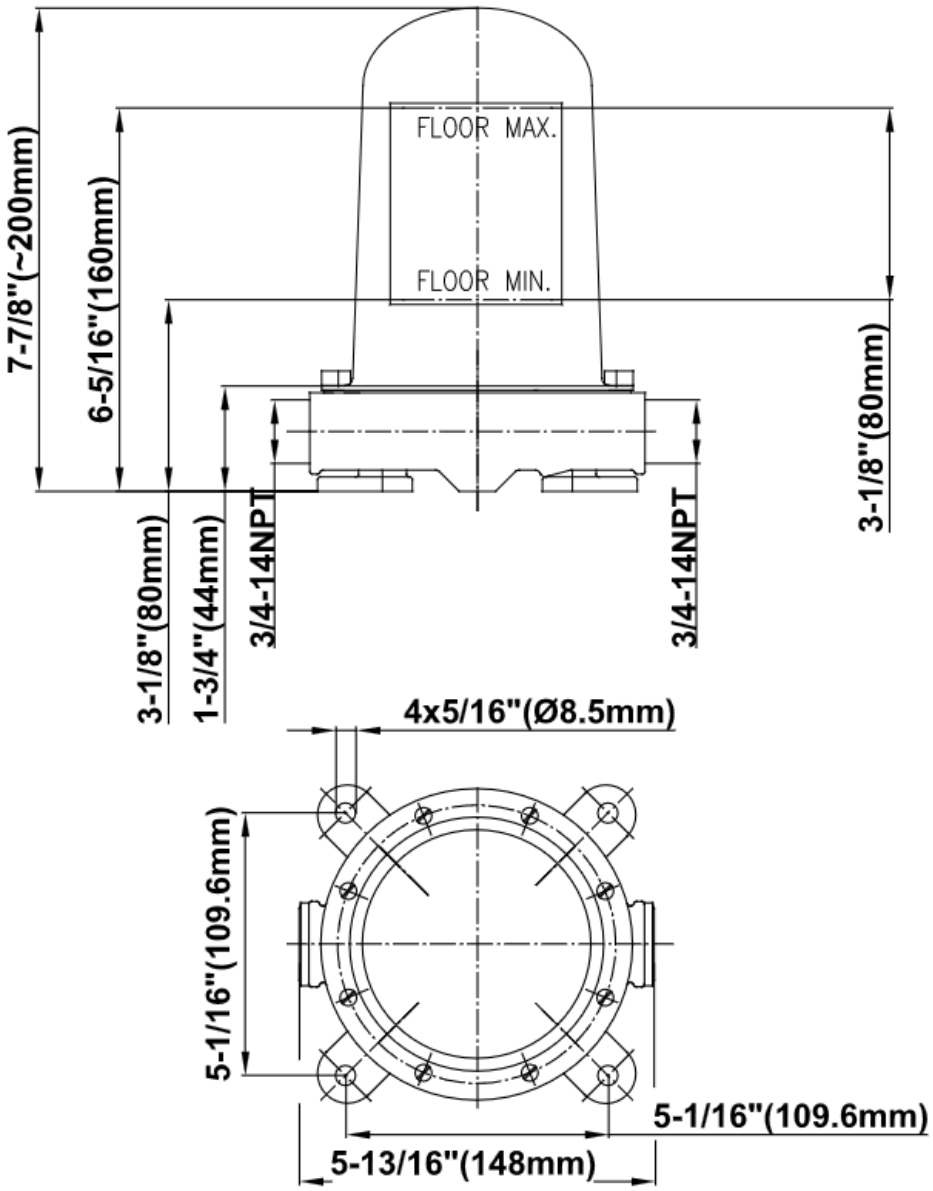
G-1045
Spout Connection Rough