MENNEKES
MY POWER CONNECTION

Wall mounted socketSCHUKO® - Part no. 10863

- screw terminals
- hinged bayonet lock lid

Protection type	IP 68
Ampere	16 A
Voltage	230 V
Contact	standard
Connection technology	Screw terminals

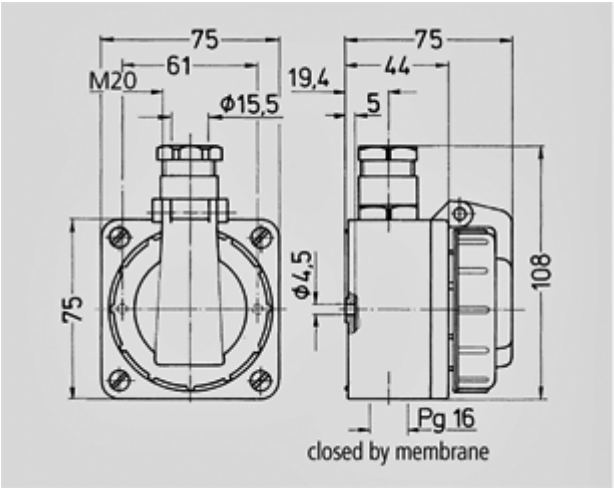

Drawing
1 MB 347

Dim. in mm