TUPPER'S TEAM
MADISON & CO. PROPERTIES
Madison & Company Properties
1193 Bergen Parkway Ste O/P Evergreen, CO 80439
Carrie Hurich Broker Associate Tupper`s Team

The printed portions of this form, except differentiated additions, have been approved by the Colorado Real Estate Commission.
(SPD19-6-23) (Available 8-23, Mandatory 1-24)

SELLER'S PROPERTY DISCLOSURE (RESIDENTIAL)

THIS SELLER'S PROPERTY DISCLOSURE SHOULD BE COMPLETED BY SELLER, NOT BY BROKER.

Seller states that the information contained in this Seller's Property Disclosure ("SPD") is correct to **Seller's CURRENT ACTUAL KNOWLEDGE** as of this Date. **Any changes must be disclosed by Seller to Buyer promptly after discovery. Seller's failure to disclose a known adverse material fact** affecting the Property or occupant **may result in legal liability.** If the sales contract requires Seller to complete this SPD, this form must be fully completed to Seller's current actual knowledge, as of the date of the Contract. If Seller has knowledge of an adverse material fact affecting the Property or occupants, it must be disclosed whether there is a specific item on this SPD or not. If the Property is part of a Common Interest Community, this SPD is limited to the Property or unit itself, except as stated in Section O. Broker may deliver a copy of this SPD to prospective buyers.

SELLER: Your answers are NOT limited to only the space provided in this SPD. Attach additional pages, reports, receipts, or any other documents you believe necessary for the information you provide to be complete.

Note: Buyer and Seller should review the Advisory at the end of this SPD.

Date:

Property:

5378 Evergreen Heights Drive, Evergreen, CO 80439

Seller: *Cassidy Family Revocable Living Trust*

Year Built: *1992*

Year Seller Acquired Property: *1999*

Note: The Contract to Buy and Sell Real Estate, not this SPD, determines whether an item is included or excluded in the sale. If there is an inconsistency between this SPD and the Contract, the Contract controls.

I. IMPROVEMENTS

A.	**BUILDING CONDITIONS** (all aspects of the Property to include decks and patios) If you know of any of the following problems **EVER EXISTING**, check the "Yes" column:	Yes	Comments
1	Structural		
2	Moisture and/or water	☒	2023 - Burst pipe in downstairs bedroom. New drywall, paint, carpeting installed after clean-up. Pipe was given additional insulation.
3	Damage due to termites, other insects, birds, animals, or rodents		
4	Damage due to hail, wind, fire, flood, or other casualty		
5	Cracks, heaving or settling		
6	Exterior wall or window	☒	Broken seals on several upstairs windows; all were repaired or replaced.
7	Exterior Artificial Stucco (EIFS)		
8	Subfloors		
9			
10			

Seller(s) Initials: CEC YPC

CTMeContracts.com - ©2026 MRI Software LLC

B.	**ROOF** If you know of any of the following problems **EVER EXISTING**, check the "Yes" column:	Yes	Comments
1	Roof leak		
2	Damage to roof		
3	Skylight		
4	Gutter or downspout		
5	Other roof problems, issues or concerns		
6			
7			
	ROOF - Other Information Do you know of the following on the Property:		
8	Roof under warranty until Transferable? ☐ YES ☒ NO		
9	Roof work done while under current roof warranty		
10	Roof material: Asphalt shingles Age: 15		
11			

C.	**APPLIANCES** (if included in the sale) If you know of any problems **NOW EXISTING** with the following, check the "Yes" column:	Yes	Age If Known	Comments
1	Built-in vacuum system & accessories			
2	Clothes dryer		1999	
3	Clothes washer			
4	Dishwasher		1992	
5	Disposal		1992	
6	Freezer			
7	Gas grill			
8	Hood			
9	Microwave oven		2014	
10	Oven		1999	
11	Range		1999	
12	Refrigerator		2014	Ice maker motor was replace in 2024.
13	T.V. antenna: ☐ Owned ☐ Leased			
14	Satellite system or DSS dish: ☐ Owned ☐ Leased			
15	Trash compactor			
16				
17				

D.	**ELECTRICAL & TELECOMMUNICATIONS** If you know of any problems **NOW EXISTING** with the following, check the "Yes" column:	Yes	Age If Known	Comments
1	Security system: ☐ Owned ☐ Leased			
2	Smoke/fire detectors: ☐ Battery ☒ Hardwire		1992	

Seller(s) Initials: DEC JFC

CTMeContracts.com - ©2026 MRI Software LLC

3	Carbon Monoxide Alarm: ☒ Battery ☐ Hardwire		2025	
4	Light fixtures			
5	Switches & outlets			
6	Telecommunications (T1, fiber, cable, satellite)			Xfinity Cable
7	Inside telephone wiring & blocks/jacks			
8	Ceiling fans		1992	
9	Garage door opener and remote control # of remote/openers:1			
10	Intercom/doorbell			
11	In-wall speakers			
12				
13				
	ELECTRICAL & TELECOMMUNICATIONS If you know of any problems **EVER EXISTING** with the following, check the "Yes" column:			
14	Electrical Service			
15	Aluminum wiring at the outlets (110)			
16	Solar panels: ☐ Owned ☐ Leased			
17	Wind generators: ☐ Owned ☐ Leased			
17	Electric Wiring or Panel			
18				
19				
	ELECTRICAL & TELECOMMUNICATIONS - Other Information: Do you know of the following on the Property:			
20	220 volt service			
21	Electrical Service: Amps			
22	Landscape Lighting			
23	Electrical Provider: Excel Energy		1992	
24	Cable/TV provider Xfinity			
25	Seller's Internet Provider Xfinity			
26				

E.	**MECHANICAL** If you know of any problems **NOW EXISTING** with the following, check the "Yes" column:	**Yes**	**Age If Known**	**Comments**
1	Overhead doors (including garage doors)			
2	Entry gate system			
3	Elevator			
4	Sump pump(s): # of			
5	Recycle pump			
6				

Seller(s) Initials: VEC JTC

CTMeContracts.com - ©2026 MRI Software LLC

7				

F.	VENTILATION, AIR & HEAT If you know of any problems **NOW EXISTING** with the following, check the "Yes" column:	Yes	Age If Known	Comments
1	Heating System			
2	Evaporative cooler			
3	Window air conditioning units			
4	Central air conditioning			
5	Attic/whole house fan			
6	Vent fans			
7	Humidifier			
8	Air purifier			
9	Fireplace			
10	Fireplace insert		2023	Insert replaced 5/22/2023.
11	Heating Stove			
12	Fuel tanks			
13				
14				
	VENTILATION, AIR & HEAT - Other Information: Do you know of the following on the Property:			
15	Heating system (including furnace): Type Boiler Fuel Gas Type Fuel		1992	
16	Fireplace: Type Fuel Gas			
17	Heating Stove: Type Fuel			
18	When was fireplace/wood stove, chimney/flue last cleaned: Date: ☒ Do not know			
19	Fuel tanks: ☐ Owned ☐ Leased			
20	Radiant heating system: ☐ Interior ☐ Exterior Type			
21	Fuel Provider: Excel Energy			
22				

G.	WATER If you know of any problems **NOW EXISTING** with the following, check the "Yes" column:	Yes	Age If Known	Comments
1	Water heater(s)			
2	Water filter system		2014	Reverse Osmosis filter installed in kitchen sink.
3	Water softener			
4	Water system pump			
5	Sauna			
6	Hot tub or spa		2014	Jetted tub installed in Master Bath.
7	Steam room/shower			
8	Underground sprinkler system			

Seller(s) Initials: YC JTC

CTMeContracts.com - ©2026 MRI Software LLC

9	Fire sprinkler system			
10	Backflow prevention device			
11	Irrigation pump			
12				
13				
	Water If you know of any problems **EVER EXISTING** with the following, check the "Yes" column:			
14	Water system (including lines and water pressure)			
15	Well			
16	Pool			
17	Irrigation system			
18				
19				
	WATER - Other Information: Do you know of the following on the Property:			
20	Water heater: Number of 1 Fuel type Gas Capacity			
21	Water filter system: ☒ Owned ☐ Leased		2014	Kitchen reverse osmosis system installed 2014 only.
22	Water softener: ☐ Owned ☐ Leased			
23	Master Water Shutoff Location: Downstairs Utlity Room			
24	Well metered			
25	Well Pump: Date of last inspection Date of last service			
26	Galvanized pipe			
27	Polybutylene pipe			
28	Well Pump - GPM Date:			
29	Cistern water storage gallons			
30	Supplemental water purchased in past 2 years?			
31				

H.	**SOURCE OF WATER & WATER SUPPLY** Do you know of the following on the Property:
1	Type of water supply: ☐Public ☐Community ☒Well ☐Shared Well ☐Other ☐None If the Property is served by a Well, a copy of the Well Permit ☐ **Is** ☒ **Is Not attached.** Well Permit #:159855 Drilling Records ☐ **Are** ☒ **Are Not** attached. Shared Well Agreement ☐ **Yes** ☒ **No.** The **Water Provider** for the Property can be contacted at: Name: Address: Web Site: Phone No.: ☐There is neither a Well nor a Water Provider for the Property. The source of potable water for the Property is [describe source]: **SOME WATER PROVIDERS RELY, TO VARYING DEGREES, ON NONRENEWABLE GROUND WATER. YOU MAY WISH TO CONTACT YOUR PROVIDER (OR INVESTIGATE THE DESCRIBED SOURCE) TO DETERMINE THE LONG-TERM SUFFICIENCY OF THE PROVIDER'S WATER SUPPLIES.**

Seller(s) Initials: VEC JFC

CTMcContracts.com - ©2026 MRI Software LLC

I.	SEWER If you know of any problems **EVER EXISTING** with the following, check the "Yes" column:	Yes	Comments
1	Sewage system (including sewer lines)		
2	Lift station (sewage ejector pump)		
3			
4			
	SEWER - Other Information Do you know of the following on the Property:		
5	Type of sanitary sewer service: ☐ Public ☐ Community ☒ Septic System ☐ None ☐ Other If the Property is served by an on-site septic system, provide buyer with a copy of the permit. Type of septic system: ☐ Tank ☒ Leach ☐ Lagoon		
6	Sewer service provider:		
7	Sewer line scoped? Date:		
8	If a septic system, date latest Individual Use Permit issued:		
9	If a septic system, date of latest inpection:		
10	If a septic system, date of latest pumping: 06/16/2025		
11	Gray water storage/use		
12			

J.	FLOODING AND DRAINAGE If you know of any problems **EVER EXISTING** with the following on the Property, check the "Yes" column:	Yes	Comments
1	Flooding or drainage		
2			
3			
	DRAINAGE AND RETENTION PONDS - Other Information Do you know of the following on the Property:	Yes	Comments
4	Drainage, retention ponds		
5			

K.	OTHER DISCLOSURES - IMPROVEMENTS If you know of any problems **NOW EXISTING** with the following, check the "Yes" column:	Yes	Comments
1	Included fixtures and equipment		
2	Stains on carpet	☒	Master Bedroom
3	Floors	☒	Water stained wooden floors in 3 areas. Scheduled to fix/replace damaged wood and re-stain scheduled for completion Dec. 2025. Deposit sent to Hunt Flooring.
4			
5			

II. GENERAL

L.	USE, ZONING & LEGAL ISSUES If you know of any of the following **EVER EXISTING**, check the "Yes" column:	Yes	Comments
1	Zoning violation, variance, conditional use, violation of an enforceable PUD, or non-conforming use		

Seller(s) Initials: [illegible] [illegible]

CTMeContracts.com - ©2026 MRI Software LLC

2	Notice or threat of condemnation proceedings		
3	Notice of any adverse conditions from any governmental or quasi-governmental agency that have not been resolved		
4	Notice of zoning action related to the Property		
5	Building code, city, or county violations		
6	Violation of restrictive covenants or owners' association rules or regulations		
7	Any building or improvements constructed within the past one year before this Date without approval by the owner's associations or the designated approving body		
8	Any additions or alterations made with a Building Permit		
9	Any additions or non-aesthetic alterations made without a Building Permit		
10	Other legal action		
11	Any part of the Property leased to others (written or oral)		
12	Used for short-term rentals in the past year		
13	Grandfathered conditions or uses		
14			
15			

M.	**ACCESS & PARKING** If you know of any of the following **EVER EXISTING** check, the "Yes" column:	Yes	Comments
1	Any access problems, issues or concerns		
2	Roads, trails, paths, or driveways through the Property used by others		
3	Public highway or county road bordering the Property		
4	Any proposed or existing transportation project that affects or is expected to affect the Property		
5	Encroachments, boundary disputes or unrecorded easements		
6	Shared or common areas with adjoining properties		
7	Requirements for curb, gravel/paving, landscaping		
8	Any limitations on parking or access due to size, number of vehicles, or type of vehicles in the past year		
9			
10			

N.	**ENVIRONMENTAL CONDITIONS** If you know of any of the following **EVER EXISTING** on any part of the Property, check the "Yes" column:	Yes	Comments
1	Hazardous materials on the Property, such as radioactive, toxic, or biohazardous materials, asbestos, pesticides, herbicides, wastewater sludge, methane, mill tailings, solvents, or petroleum products		
2	Underground storage tanks		
3	Aboveground storage tanks		
4	Underground transmission lines		
5	Property used as, situated on, or adjoining a dump, landfill or municipal solid waste landfill		
6	Monitoring wells or test equipment		
7	Sliding, settling, upheaval, movement or instability of earth, or expansive soils on the Property		
8	Mine shafts, tunnels, or abandoned wells on the Property		

Seller(s) Initials: 

CTMeContracts.com - ©2026 MRI Software LLC

9	Within a governmentally designated geological hazard or sensitive area		
10	Within a governmentally designated floodplain or wetland area		
11	Dead, diseased, or infested trees or shrubs	☒	Several dead trees i.e. 2 pines and 1 small cottonwood.
12	Environmental assessments, studies, or reports done involving the physical condition of the Property		
13	Used for any mining, graveling, or other natural resource extraction operations such as oil and gas wells		
14	Smoking inside improvements (including garages, unfinished space, or detached buildings) on Property		
15	Animals kept in the residence	☒	1 cat
16	Other environmental problems, issues or concerns		
17	Odors		
18			
19			

O.	**RADON** If you know of any of the following **EVER EXISTING**, check the "Yes" column:	**Yes**	**Comments**
1	Radon test(s) conducted on the Property. Include the most recent records and reports pertaining to radon concentrations within the Property.		
2	Radon concentrations detected or mitigation or remediation performed. Provide a full description.		
3	Radon mitigation system installed on Property. Provide all information known by Seller about the radon mitigation system.		
4			
5			

P.	**COMMON INTEREST COMMUNITY - ASSOCIATION PROPERTY** If you know of any of the following **NOW EXISTING**, check the "Yes" column:	**Yes**	**Comments**
1	Property is part of an owners' association	☒	Evergreen Heights HOA
2	Special assessments or increases in regular assessments approved by owners' association but not yet implemented		
3	Problems or defects in the Common Elements or Limited Common Elements of the Association Property		
	COMMON INTEREST COMMUNITY - ASSOCIATION PROPERTY If you know of any of the following **EVER EXISTED**, check the "Yes" column:		
4	Has the Association made demand or commenced a lawsuit against a builder or contractor alleging defective construction of improvements of the Association Property (common area or property owned or controlled by the Association but outside the Seller's Property or unit)		
5			
6			
	COMMON INTEREST COMMUNITY - ASSOCIATION PROPERTY - Other Information: Name of the Owner's Associations governing the Property:		**Contact Information**
7	Owner's Association #1:		
8	Owner's Association #2:		
9	Owner's Association #3:		
10	Owner's Association #4:		

Seller(s) Initials: YEC YEC

CTMeContracts.com - ©2026 MRI Software LLC

Q.	GENERAL DISCLOSURES If you know of any of the following **EVER EXISTING**, check the "Yes" column:	Yes	Comments
1	Written reports of any building, site, roofing, soils, water, sewer, or engineering investigations or studies of the Property		
2	Any property insurance claim submitted (whether paid or not)	☒	2023 burst pipe in downstairs bedroom. Claim paid.
3	Structural, architectural, and engineering plans and/or specifications for any existing improvements		
4	Property was previously used as a methamphetamine laboratory and not remediated to state standards		
5	Government special improvements approved, but not yet installed, that may become a lien against the Property		
6	Pending: (1) litigation or (2) other dispute resolution proceeding regarding the Property		
7	Property is subject to Deed Restrictions, other recorded document restrictions, or Affordable Housing Restrictions		
8	Property is located in a historic district		
9			
10			
	GENERAL - Other Information:		
11	Location of Mailbox and No. Resident's group mailboxes on Evergreen Heights Dr. #5378		
12			

Seller and Buyer understand that the real estate brokers do not warrant or guarantee the above information on the Property. Property inspection services may be purchased and are advisable. This SPD is **not** intended as a substitute for an inspection of the Property.

ADVISORY TO SELLER:

Seller acknowledges that Broker will disclose to any prospective buyer all adverse material facts actually known by Broker, including but not limited to adverse material facts pertaining to the physical condition of the Property, any material defects in the Property, and any environmental hazards affecting the Property. These types of disclosures may include such matters as structural defects, soil conditions, violations of health, zoning or building laws, and nonconforming uses and zoning variances.

In the event Seller discovers a new adverse material fact after completing this SPD, Seller must disclose any such new adverse material fact to Buyer.

The information contained in this SPD has been furnished by Seller, who certifies it was answered truthfully, based on **Seller's CURRENT ACTUAL KNOWLEDGE.**

John Cassidy, Trustee
Date: 9/19/2025
Seller: Cassidy Family Revocable Living Trust
By: John Cassidy, Trustee

Joyce Cassidy, Trustee
Date: 9/19/2025
Seller: Cassidy Family Revocable Living Trust
By: Joyce Cassidy, Trustee

ADVISORY TO BUYER:

1. Even though Seller has answered the above questions to Seller's current actual knowledge, Buyer should thoroughly inspect the Property and obtain expert assistance to accurately and fully evaluate the Property to confirm the status of the

Seller(s) Initials: JFC JFC

CTMeContracts.com - ©2026 MRI Software LLC

following matters are satisfactory to Buyer:

a. the physical condition of the Property;
b. the presence of mold or other biological hazards;
c. the presence of rodents, insects and vermin including termites;
d. the legal use of the Property, including zoning and legal access to the Property;
e. the availability and source of water, sewer, and utilities;
f. the environmental and geological condition of the Property;
g. the presence of noxious weeds; and
h. any other matters that may affect Buyer's use and ownership of the Property that are important to Buyer as Buyer decides whether to purchase the Property.

2. Seller states that the information is correct to "Seller's current actual knowledge" as of the date of this form. The term "current actual knowledge" is intended to limit Seller's disclosure only to facts actually known by the Seller and does not include "constructive knowledge" or "common knowledge" or what Seller "should have known" about the Property. The Seller has no duty to investigate or inspect the Property or inclusions when this SPD is filled in and signed.

3. Valuable information may be obtained from various local/state/federal agencies, and other experts may assist Buyer by performing more specific evaluations and inspections of the Property.

4. Boundaries, location and ownership of fences, driveways, hedges, and similar features of the Property may become the subjects of a dispute between a property owner and a neighbor. A survey may be used to determine the likelihood of such problems.

5. Whether any item is included or excluded is determined by the Contract between Buyer and Seller and not this SPD.

6. Seller does not warrant that the Property or inclusions are fit for Buyer's intended purposes or use of the Property. Disclosure of the condition of an item is not to be construed as a warranty of its continued operability or as a representation or warranty that such item is fit for Buyer's intended purposes.

7. Buyer receipts for a copy of this SPD.

Buyer: _____ Date: _____

Buyer: _____ Date: _____

SPD19-6-23. SELLER'S PROPERTY DISCLOSURE (RESIDENTIAL)

CTM eContracts - ©2026 MRI Software LLC - All Rights Reserved

Seller(s) Initials: YEC JTC

CTMeContracts.com - ©2026 MRI Software LLC

THIS FORM HAS NOT BEEN APPROVED BY THE COLORADO REAL ESTATE COMMISSION. IT WAS PREPARED BY Frascona, Joiner, Goodman and Greenstein, P.C. (303-494-3000) AS LEGAL COUNSEL to Carrie Hurich.
©2018 All rights reserved.

PROPERTY ADDENDUM
5378 Evergreen Heights Drive
Evergreen, CO 80439

- **Proper Division of Land:**
  The proper creation of parcels in unincorporated areas of the county by the Planning & Zoning Department is an important issue. **Buyer should verify that this property has been properly created.**

  Buyer is advised to contact the County Planning & Zoning Department and buyer's own attorney to confirm that this parcel was created in accordance with their rules and regulations prior to buying this property.

- **Roads & Access:**
  Buyers should investigate whether roads to the property are owned and/or maintained by the state or county. If roads are private, buyers should obtain all agreements that govern the use and maintenance of the roads and seek legal advice about how the agreements affect the property. **Buyer should investigate that there is legal ingress/egress to the property and that the actual access is where it is legally permitted.**

- **Well Information:**
  On 7/14/2025, the Colorado Division of Water Resources web site at http://www.water.state.co.us/ provided the attached well permit/log information for this property.

  Buyers are advised to obtain their own information regarding the well from the Colorado Division of Water Resources. Buyer is further advised to obtain an independent well inspection from any professional well company or inspector of Buyer's choosing.

- **Septic Information:**
  On 7/14/25, the Jefferson County Department of Health and Environment at (303) 271-5700 provided the following septic system information for this property:

Septic permit number:	13791
# of bedrooms served by septic:	3
# of persons served by septic:	6
Tank size:	1000
Leach field size:	744
Date finalized:	6/11/1991

  Buyer is advised to obtain their own information regarding the septic system from the County Department of Health. Buyer is further advised to obtain an independent septic system inspection from any professional septic company or inspector of Buyer's choosing and to consult an attorney if Buyer has any questions about the regulations.

Buyer signature Date

Buyer signature Date

TUPPER'S TEAM
MADISON & CO. PROPERTIES
Madison & Company Properties
1193 Bergen Parkway Ste O/P Evergreen, CO 80439
Carrie Hurich Broker Associate Tupper`s Team

The printed portions of this form, except differentiated additions, have been approved by the Colorado Real Estate Commission (SWA35-8-10) (Mandatory 1-11)

THIS FORM HAS IMPORTANT LEGAL CONSEQUENCES AND THE PARTIES SHOULD CONSULT LEGAL AND TAX OR OTHER COUNSEL BEFORE SIGNING.

SOURCE OF WATER ADDENDUM TO CONTRACT TO BUY AND SELL REAL ESTATE

Date: 8/19/2025

1. ADDENDUM TO CONTRACT TO BUY AND SELL REAL ESTATE. This Source of Water Addendum (Addendum) is made a part of that Contract to Buy and Sell Real Estate between Seller and Buyer dated _____ (Contract), for the purchase and sale of the Property known as No. 5378 Evergreen Heights Drive, Evergreen, CO 80439

2. SOURCE OF POTABLE WATER. Seller discloses the following information for the source of potable water for the Property:

[Select and complete 1, 2 or 3 as applicable.]

☒ **2.1** The Property's source of water is a Well. Well Permit #: 159855
If a well is the source of water for the Property, a copy of the current Well Permit ☐ **Is** ☒ **Is Not** attached.

☐ **2.2** The Water Provider for the Property can be contacted at:
Name:
Address:
Web Site:
Phone No.:

☐ **2.3** There is neither a Well nor a Water Provider for the Property. The source of water for the Property is [describe source]:

NOTE TO BUYER: SOME WATER PROVIDERS RELY, TO VARYING DEGREES ON NONRENEWABLE GROUND WATER. YOU MAY WISH TO CONTACT YOUR PROVIDER (OR INVESTIGATE THE DESCRIBED SOURCE) TO DETERMINE THE LONG-TERM SUFFICIENCY OF THE PROVIDER'S WATER SUPPLIES.

John Cassidy, Trustee
_____ Date: 9/19/2025
Seller: Cassidy Family Revocable Living Trust
By: John Cassidy, Trustee

Joyce Cassidy, Trustee
_____ Date: 9/19/2025

CTMeContracts.com - ©2026 MRI Software LLC

Seller: *Cassidy Family Revocable Living Trust*
By: Joyce Cassidy, Trustee

Buyer: _____ Date: _____

Buyer: _____ Date: _____

SWA35-8-10. SOURCE OF WATER ADDENDUM TO CONTRACT TO BUY AND SELL REAL ESTATE. CTM eContracts - ©2026 MRI Software LLC - All Rights Reserved

CTMeContracts.com - ©2026 MRI Software LLC

TUPPER'S TEAM
MADISON & CO. PROPERTIES
Madison & Company Properties
1193 Bergen Parkway Ste O/P Evergreen, CO 80439
Carrie Hurich Broker Associate Tupper`s Team
Ph: 720-437-9889

The printed portions of this form, except differentiated additions, have been approved by the Colorado Real Estate Commission. (SF94-5-18) (Mandatory 1-19)

SQUARE FOOTAGE DISCLOSURE
(Residential)

This disclosure is made to Buyer and Seller pursuant to the requirements of the Colorado Real Estate Commission and applies to improved residential real estate. Check applicable boxes below.

Property Address: *5378 Evergreen Heights Drive, Evergreen, CO 80439*

1. Licensee Measurement

Listing Licensee ☐ **Has** ☒ **Has Not** measured the square footage of the residence according to the following standard, methodology or manner:

Standard/Methodology/Manner	Date Measured	Square Footage
☐ Exterior measurement		
☐ FHA		
☐ ANSI		
☐ Local standard		
☐ Other		

2. Other Source of Measurement :

Listing Licensee ☒ **Is** ☐ **Is Not** providing information on square footage of the residence from another source(s) as indicated below:

Source of Square Footage Information	Date	Square Footage
☐ Prior appraisal (Date of document)		
☐ Building plans (Date of document)		
☒ Assessor's office (Date obtained)	*08/19/2025*	*2742*
☐ Other		

Measurement may not be exact and is for the purpose of marketing ONLY. Measurement is not for loan, valuation or other purposes. **If exact square footage is a concern, the property should be independently measured.**

Buyer and Seller are advised to verify this information. Any independent measurement or investigation should be completed by Buyer on or before any applicable deadline in the contract.

Broker: CHurich Date: *8/19/2025*
Carrie Hurich

The undersigned acknowledge receipt of this disclosure.

John Cassidy, Trustee Date: *9/19/2025*
Seller: *Cassidy Family Revocable Living Trust*
By: John Cassidy, Trustee

CTMeContracts.com - ©2026 MRI Software LLC

Joyce Cassidy, Trustee

Date: 9/19/2025

Seller: *Cassidy Family Revocable Living Trust*
By: Joyce Cassidy, Trustee

Buyer: _____ Date: _____

(SF94-5-18) SQUARE FOOTAGE DISCLOSURE CTM eContracts - ©2026 MRI Software LLC - All Rights Reserved

CTMeContracts.com - ©2026 MRI Software LLC

Form No.
GWS-25

OFFICE OF THE STATE ENGINEER
COLORADO DIVISION OF WATER RESOURCES

818 Centennial Bldg., 1313 Sherman St., Denver, Colorado 80203
(303) 866-3581

1078

WELL PERMIT NUMBER [redacted] - ____ - ____

DIV. 1 CNTY. 30 WD 9 DES. BASIN ___ MD ___

APPLICANT

GREGG & CO BUILDERS INC
P O BOX 3344
EVERGREEN, CO 80439

APPROVED WELL LOCATION

COUNTY JEFFERSON

SE 1/4 NE 1/4 Section 17

Twp 5 S , Range 71 W S P.M.

DISTANCES FROM SECTION LINES

2587 Ft. from North Section Line

177 Ft. from East Section Line

PERMIT TO CONSTRUCT A WELL

ISSUANCE OF THIS PERMIT DOES NOT CONFER A WATER RIGHT

CONDITIONS OF APPROVAL

1) This well shall be used in such a way as to cause no material injury to existing water rights. The issuance of the permit does not assure the applicant that no injury will occur to another vested water right or preclude another owner of a vested water right from seeking relief in a civil court action.

2) Approved pursuant to CRS 37-92-602(3)(b)(II)(A) as the only well on a residential site of 1.07 acres described as site 12, Evergreen Heights Subdivision Replat, Jefferson County.

3) The use of ground water from this well is limited to ordinary household purposes inside a single family dwelling and the watering of the user's noncommercial domestic animals. The ground water shall not be used for irrigation or other purposes.

4) The return flow from the use of the well must be through an individual waste water disposal system of the non-evaporative type where the water is returned to the same stream system in which the well is located.

5) The maximum pumping rate shall not exceed 15 GPM.

6) This well shall be constructed not more than 200 feet from the location specified on this permit.

M.M. 4-24-91

APPROVED: MAM

Jim A. Davidson
State Engineer

By M.A. Mallery

Receipt No. 0324384

DATE ISSUED APR 24 1991

EXPIRATION DATE APR 24 1993

Wtd-5-Rev. 76

COLORADO DIVISION OF WATER RESOURCES

818 Centennial Bldg., 1313 Sherman St., Denver, Colorado 80203

RECEIVED
APR 11 '91
WATER RESOURCES
STATE ENGINEER
COLO.

PERMIT APPLICATION FORM

159855

Application must be complete where applicable. Type or print in BLACK INK. No overstrikes or erasures unless initialed.

FOR: (xx) A PERMIT TO USE GROUND WATER
(xx) A PERMIT TO CONSTRUCT A WELL
(xx) A PERMIT TO INSTALL A PUMP

( ) REPLACEMENT FOR NO. _____
(xx) OTHER Re-issue of expired permit 150949
WATER COURT CASE NO. _____

CHEQUE 69.00 04-11-91CL-24384

(1) APPLICANT - mailing address

NAME Gregg & Co. Builders, Inc.

STREET P.O. Box 3344

CITY Evergreen, Colorado 80439
(State) (Zip)

TELEPHONE NO. 303-674-7939

(2) LOCATION OF PROPOSED WELL

County Jefferson

SE ¼ of the NE ¼, Section 17

Twp. 5 S (N,S), Rng. 71 W (E,W), 6th P.M.

(3) WATER USE AND WELL DATA

Proposed maximum pumping rate (gpm) 15.0

Average annual amount of ground water to be appropriated (acre-feet): 1.0

Number of acres to be irrigated: None

Proposed total depth (feet): 400

Aquifer ground water is to be obtained from:

Fractures in granite

Owner's well designation _____

GROUND WATER TO BE USED FOR:

(xx) HOUSEHOLD USE ONLY - no irrigation (0)
( ) DOMESTIC (1) ( ) INDUSTRIAL (5)
( ) LIVESTOCK (2) ( ) IRRIGATION (6)
( ) COMMERCIAL (4) ( ) MUNICIPAL (8)

(xx) OTHER (9) and the watering of the applicants non-commercial domestic animals.
DETAIL THE USE ON BACK IN (11)

(4) DRILLER

Name Ernie's Mountain Drilling, Inc.

Street P.O. Box 357

City Evergreen, Colorado 80439
(State) (Zip)

Telephone No. 303-526-0290 Lic. No. 1078

FOR OFFICE USE ONLY: DO NOT WRITE IN THIS COLUMN

Receipt No. 9024384 / _____

Basin _____ Dist. _____

CONDITIONS OF APPROVAL

This well shall be used in such a way as to cause no material injury to existing water rights. The issuance of the permit does not assure the applicant that no injury will occur to another vested water right or preclude another owner of a vested water right from seeking relief in a civil court action.

SEE 150949

MAM

APPLICATION APPROVED

PERMIT NUMBER _____

DATE ISSUED _____

EXPIRATION DATE _____

_____
(STATE ENGINEER)

BY _____

I.D. 1 COUNTY 30 09

(5) THE LOCATION OF THE PROPOSED WELL and the area on which the water will be used must be indicated on the diagram below. Use the CENTER SECTION (1 section, 640 acres) for the well location.

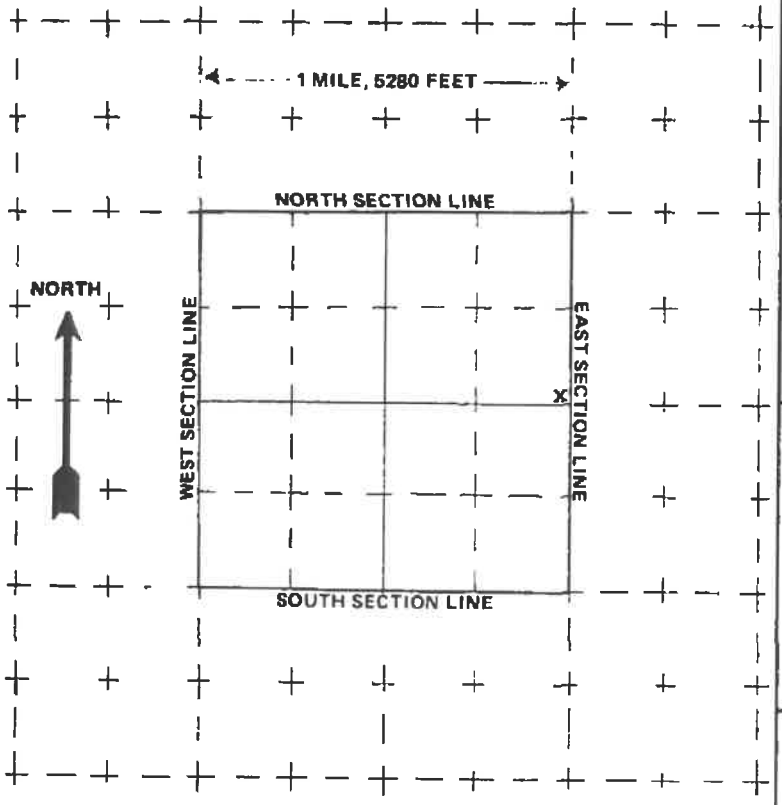

The scale of the diagram is 2 inches = 1 mile
Each small square represents 40 acres.

WATER EQUIVALENTS TABLE (Rounded Figures)
An acre-foot covers 1 acre of land 1 foot deep
1 cubic foot per second (cfs) . . . 449 gallons per minute (gpm)
A family of 5 will require approximately 1 acre-foot of water per year.
1 acre-foot . . . 43,560 cubic feet . . . 325,900 gallons.
1,000 gpm pumped continuously for one day produces 4.42 acre-feet.

(6) THE WELL MUST BE LOCATED BELOW by distances from section lines.

2587 ft. from North (north or south) sec. line

177 ft. from East (east or west) sec. line

LOT 12 BLOCK _____ FILING # _____

SUBDIVISION Evergreen Heights Exemption Survey #

(7) TRACT ON WHICH WELL WILL BE LOCATED Owner: Applicant

No. of acres 1.07 . Will this be the only well on this tract? Yes

(8) PROPOSED CASING PROGRAM

Plain Casing

6 5/8 in. from +1 ft. to 20 ft.

4.5 in. from 10 ft. to 300 ft.

Perforated casing

4.5 in. from 300 ft. to 400 ft.

_____ in. from _____ ft. to _____ ft.

(9) FOR REPLACEMENT WELLS give distance and direction from old well and plans for plugging it:

(10) LAND ON WHICH GROUND WATER WILL BE USED:

Owner(s): Applicant No. of acres: 1.07

Legal description: Lot 12 of Evergreen Heights Exemption Survey # 1

(11) DETAILED DESCRIPTION of the use of ground water: **Household use and domestic wells must indicate type of disposal system to be used.**

Normal in house use, fire protection and the watering of the applicants non-commercial domestic animals.

Septic tank and leachfield.

(12) OTHER WATER RIGHTS used on this land, including wells. Give Registration and Water Court Case Numbers.

Type or right	Used for (purpose)	Description of land on which used
None		

(13) THE APPLICANT(S) STATE(S) THAT THE INFORMATION SET FORTH HEREON IS TRUE TO THE BEST OF HIS KNOWLEDGE.

SIGNATURE OF APPLICANT(S)

Use additional sheets of paper if more space is required.

WPR CP

FORM NO. GWS-31 11/90

WELL CONSTRUCTION AND TEST REPORT
STATE OF COLORADO, OFFICE OF THE STATE ENGINEER

For Office Use only

RECEIVED
JUL 0 3 '91
WATER RESOURCES
STATE ENGINEER
COLO.

1. WELL PERMIT NUMBER 159855 ~~159855~~ 15985S

2. OWNER NAME(S) GREGG & COMPANY BUILDERS INC.
Mailing Address P.O. Box 3344
City, St. Zip Evergreen, Colorado 80439
Phone (303) 674-7939

3. WELL LOCATION AS DRILLED: SE 1/4 NE 1/4, Sec. 17 Twp. 5 S, Range 71 W
DISTANCES FROM SEC. LINES:
2587 ft. from North (north or south) Sec. line. and 177 ft. from East (east or west) Sec. line. OR
SUBDIVISION: Evergreen Heights Subdivision Replat LOT 12 BLOCK ____ FILING(UNIT) ____
STREET ADDRESS AT WELL LOCATION:

4. GROUND SURFACE ELEVATION unknown ft. DRILLING METHOD Air Percussion
DATE COMPLETED May 8, 1991. TOTAL DEPTH 583 ft. DEPTH COMPLETED 583 ft.

5. GEOLOGIC LOG:

Depth	Description of Material (Type, Size, Color, Water Location)	
12	Pink & Grey Granite	med.
50	Pink Granite, Black Schist	med.
60	Pink Granite	med.
150	Pink & Grey Granite	med. 150
180	Pink Granite	med.
387	Pink Granite, Black Schist	med.
390	Pink Granite, White Quartz	med.
500	Pink & Grey Granite	med.
530	Black Schist, White Quartz	med. 510
550	Pink & Grey Granite	med.
583	Pink & Grey Granite, White Quartz	med. 550

REMARKS: Formation packer set at 63 feet with Bentonite chips.

6. HOLE DIAM.

(in.)	From (ft)	To (ft)
8-1/2	0	21-1/2
5-15/16	21-1/2	583

7. PLAIN CASING

OD (in)	Kind	Wall Size	From(ft)	To(ft)
6-5/8	Steel	0.203	+1	21-1/2
4.5	PVC	0.214	9	463
4.5	PVC	0.214	563	583

PERF. CASING: Screen Slot Size:

4.5	PVC	0.214	463	563

8. FILTER PACK:
Material ____
Size ____
Interval ____

9. PACKER PLACEMENT:
Type rubber shale trap
Depth 63'

10. GROUTING RECORD:

Material	Amount	Density	Interval	Placement
neat cement		14.7	0-21-1/2	poured

11. DISINFECTION: Type H.T.H. Pellets & Powder Amt. Used 2 cups of each-well bailed-solution left in the well.

12. WELL TEST DATA: ☐ Check box if Test Data is submitted on Supplemental Form.
TESTING METHOD Blown by air.
Static Level 164 ft. Date/Time measured 5/9/91 8:00 AM, Production Rate 1.82 gpm.
Pumping level 583 ft. Date/Time measured 5/8/91 11:30 AM, Test length (hrs.) 2 Hours
Remarks

13. I have read the statements made herein and know the contents thereof, and that they are true to my knowledge. [Pursuant to Section 24-4-104 (13)(a) C.R.S., the making of false statements herein constitutes perjury in the second degree and is punishable as a class 1 misdemeanor.]

CONTRACTOR ERNIE'S MOUNTAIN DRILLING, INC. Phone (303) 526-0290 Lic. No. 1078
Mailing Address P.O. Box 357, Evergreen, Colorado 80470

Name/Title (Please type or print)	Signature	Date
Gary E. Bryning, President	Gary E. Bryning	9/10/91

JEFFERSON COUNTY DEPARTMENT OF HEALTH AND ENVIRONMENT
260 S. KIPLING, LAKEWOOD, CO 80226 PHONE: 239-7075

INDIVIDUAL SEWAGE DISPOSAL SYSTEM PERMIT NO. 13791

Site Address: 5378 EVERGREEN HEIGHTS DR
Issued to: GREGG + CO
Legal Description: LOT 12, EVERGREEN HEIGHTS
System Designed for a 3 **Bedroom Single Family Dwelling**
Tank Size: 1000 **gal. (min)**
Absorption Bed Size: 744 **sq. ft. (min)**
FINAL APPROVAL BY INSPECTOR: M. DAVIS - JSM
FINAL APPROVAL DATE: 6/11/91

SYSTEM AS INSTALLED

NORTH

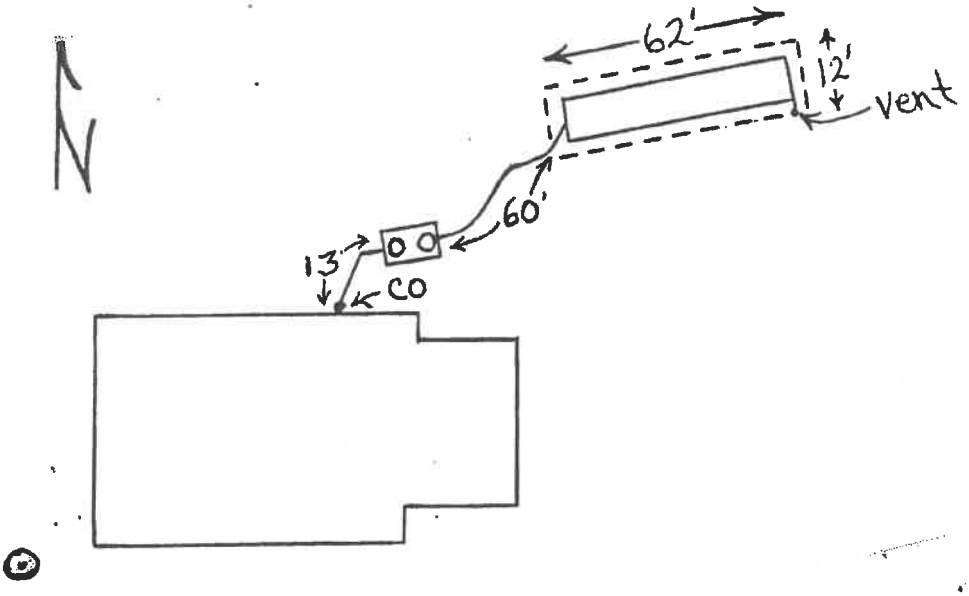

JEFFERSON COUNTY DEPARTMENT OF HEALTH AND ENVIRONMENT
260 South Kipling Street
Lakewood, Colorado 80226

PERMIT FOR INDIVIDUAL SEWAGE DISPOSAL SYSTEM NO. 13791

Permit Issued To: Gregg and Company

Address: P. O. Box 3344
Evergreen, CO. 80439

Location of System: Lot 12, Evergreen Heights
5378 Evergreen Heights Dr.

Conditions For Permit Issuance:

1.) This permit is issued for use by a 3 bedroom SINGLE FAMILY DWELLING ONLY. Despite applicable zoning any change in this use without prior approval by this Department will result in revocation of this permit.
2.) A preliminary inspection by this department must be made upon completion of the 6 foot excavation.
3.) No acceptance of this system will be made without final inspection by this department.
4.) Unless noted below, a minimum separation distance of 200 feet shall be maintained between all wells and leaching fields, existing or proposed.
5.) Maintain a minimum of 115 feet from proposed well on Lot 12 to leach field on Lot 13; 6.) Maintain a minimum of 160 feet from proposed well to proposed leach field; 7.) Provide a liner on the lower 3 sides of the 6 foot excavation; 8.) Berm above the leach field to divert surface drainage; 9.) Reseed all disturbed areas.

Tank Capacity: 1000 Gal. minimum - 2 compartment
Absorption area: 744 Sq. Ft. (minimum)

Application Approval Date: April 23, 1991

THIS PERMIT EXPIRES ONE YEAR FROM THIS DATE.

Approved by Mark B. Johnson, MD, Director of Health

This individual sewage disposal system was installed by Renaud (License No.) _____ and has been inspected and accepted for use by a representative of the Jefferson County Health Department. The owner assumes all responsibility in case of failure or inadequacy of this sewage disposal system.

Date: June 11, 91 Sanitarian _____

Type of Soil: Silty sand & gravel / weathered migmatite Percolation Data: ≤30 MPI

Bedrock Data: > 4' Groundwater Data: > 4'

Slope of Ground Surface: 35% Type of System: RBSB

On-Site Inspection Data: _____

Tank Capacity: 1000 gal (2-C) Absorption Area: 744 sq ft (12'x62')

Conditions For Permit Issuance: (Check Where Applicable)

(X) 1.) Number of bedrooms 3.
(X) 2.) A 6 foot preliminary inspection required.
(X) 3.) Final inspection required.
( ) 4A) 200 foot Separation Distances required.
(X) 4B) 200 foot Separation Distances with exceptions - Exceptions must be noted below:

5.) Maintain a minimum 115' from proposed well on lot 12 to Lot 13. 6.) Maintain a minimum 160' from proposed well to proposed L.F. 7.) Provide a liner on the lower 3 sides of the 6' excavation 8.) Berm above the L.F. to divert surface drainage 9.) Reseed all disturbed areas.

Application Acceptance Date: April 22, 1991 1.07 Ac

Sanitarian: _____ Supervisor: _____ Yes

* *

Inspection Data

1-29-91 Field ok
6x 12'x62'
Soil ok some Rock
RT. No Well
No liner
F/-91 Partial Final
Field only
-6-91
Tank & Liners ok
Berm ok
RT No Well
-22-91 Well dist
Taped: Onsite / 138'
lot 13 LF 139'

Sketch of Completed System:

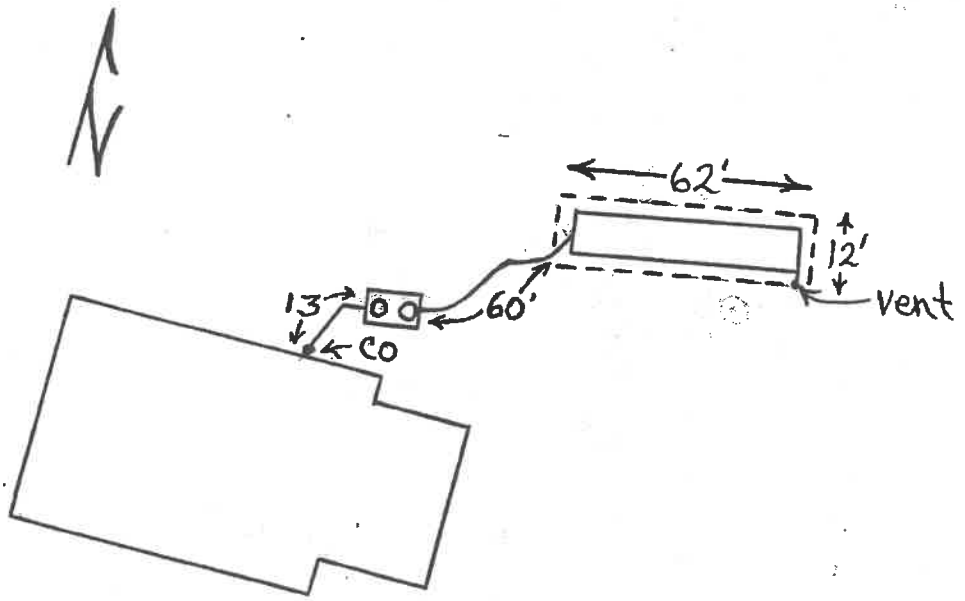

TABLE I - RESULTANT GEOLOGIC FLOW DIRECTION ANALISIS

SET A - FIELD, MIGMATITE

Dip Direction	Dip	Ranking	Apparent Dip	Weighted Dip
40	48	3	48	144
165	76	1	68	68
* 330	85	1	85	85
		5		297

297 / 5 = 59

RESULTANT GEOLOGIC DIP, SET A - FIELD: DIP DERECTION, 38 DEGREES; DIP, 59 DEGREES.

SET B - WELL, MIGMATITE

Dip Direction	Dip	Ranking	Apparent Dip	Weighted Dip
25	48	3	48	144
		3		144

144 / 3 = 48

RESULTANT GEOLOGIC DIP, SET B - WELL: DIP DIRECTION, 25 DEGREES; DIP, 48 DEGREES.

NOTE: Dip directions are by degrees (e.g., 0=N, 90=E, 180=S, and 270=W).

* Designates a flow on strike dip direction.

Job No.2489

E. O. CHURCH, INC.
CONSULTING GEOLOGICAL ENGINEER

925 E. 17th AVENUE • DENVER, COLORADO 80218 • (303) 832-9692
FAX (303) 832-3517

RECEIVED
JUN 11 1991
EOC
Jefferson County Health Dept.

June 11, 1991

Gregg & Company
P.O. BOX 3344
Evergreen, CO 80439

Subject: Revised Geologic Investigation
Lot 12, Evergreen Heights
Jefferson County Colorado
Job No. 2271

Gentlemen,

This letter is to confirm our site evaluation for the well location for the subject site.

The well was drilled at a distance of 139 feet from the field at Lot 13 and 138 feet from the onsite field, Lot 12. Originally, the well was proposed 145 feet from the field at Lot 13 and 160 feet from the onsite field. The angles between the flow directions and lines connecting the well and fields within 200 feet exceed the minimum 60 degrees.

If there are any questions, please call.

Very truly yours,

E. O. CHURCH, INC.



Edward O. Church, P.E.

2 copies sent

cc: Jefferson County Health Department, ATTN: Mike Davis

E. O. CHURCH, INC.
CONSULTING GEOLOGICAL ENGINEER

925 E. 17th AVENUE • DENVER, COLORADO 80218 • (303) 832-9692
FAX (303) 832-3517

May 6, 1991

GREGG & COMAPNY
P.O. BOX 3344
Evergreen, CO 880439

Subject: Revised Well Distances
Lot 12, Evergreen Heights
Jefferson County Colorado
Job No. 2271

Gentlemen,

This letter is to confirm our site evaluation for the well location for the subject site.

The well was finally sited at a distance of 131 feet from the field at Lot 13 and 144 feet from the onsite feild, Lot 12. Originally, the well was proposed 145 feet from the field at Lot 13 and 160 feet from the onsite field. The angles between the flow directions and lines connecting the well and fields within 200 feet exceed the minimum 60 degrees.

If there are any questions, please call.

Very truly yours,

E. O. CHURCH, INC

COLORADO REGISTERED EDWARD O. CHURCH 13172 PROFESSIONAL ENGINEER

Edward O. Church,

2 copies sent

cc: Jefferson County Health Department, ATTN: Mike Davis
260 South Kipling
Lakewood, CO 80226

E. O. CHURCH, INC.
CONSULTING GEOLOGICAL ENGINEER

925 E. 17th AVENUE • DENVER, COLORADO 80218 • (303) 832-9692

July 3, 1989

GREGG & COMPANY
9279 William Cody
Evergreen, CO 80439

Subject: Geologic Investigation and OSDS Design
Lot 12, Evergreen Heights
Jefferson County, Colorado
Job No. 2271

Gentlemen,

As requested, we have performed a geologic investigation to evaluate locations for a well and disposal field, and have prepared an Onsite Sewage Disposal System (OSDS) design for the subject lot. The basis of our geologic investigation is that 200 feet is required between any absorption field and well as per Jefferson County Health Department regulations, unless evaluated by a geologist and it is found that a lesser distance, to a 100 foot minimum between well and absorption field, can be demonstrated to present no significant health hazard.

SITE CONDITIONS - The investigated site is an 1.07 acre lot as indicated on Figs. 1, 2 and 5. The site is located in a rural mountain area where onsite wells and sewage disposal systems are required. The proposed well and disposal field for the subject site is indicated on Figs. 2 and 5.

The lot is located along a north to northeast facing slopes. The ground surface at the investigated lot slopes moderately to steeply to the north. The slope at the proposed disposal field is 35% to the north, as indicated on the Topographic Gradient Analysis, Fig. 3. The ground surface has a moderate cover of pine. The surface vegetation consists of a sparse cover of native grasses. The area of the proposed field is rocky.

PROPOSED CONSTRUCTION - At the time of our investigation, a 3 bedroom home was proposed in the central portions of the lot, as indicated on Fig. 5. As a part of our investigation, locations for the well and disposal field were evaluated. The proposed well is to be 160 feet from the proposed onsite disposal field to the east.

GEOLOGIC SETTING - The investigated site is underlain by migmatite intruded by quartz monzonite, as indicated by the geologic map of the area which is Reconnaissance Geologic Map of the Conifer Quadrangle, Jefferson County, Colorado, USGS Map MF-597. A portion of this map is presented as Fig. 1 of this report. The results of our site investigation indicates that the site is underlain by migmatite.

Subsurface conditions were exposed in test pits located at the proposed disposal field and well. Subsurface conditions at the proposed field consist of 1 foot of silty sand topsoil and silty sand and gravel underlain to 2 feet by weathered migmatite. No free water was observed in the pit 2 days after excavating. At the well site, subsurface conditions consist of 0.5 foot of silty sand topsoil underlain by weathered migmatite to a depth of 3 feet. The results of a Resultant Geologic Analysis as described by Waltz are presented on Fig. 4 and Table I. The resultant dip direction at the proposed well is N43E, with a dip of 51 degrees. The resultant dip direction at the proposed absorption field is N16E, with a dip of 61 degrees. The angle between the resultant geologic flow direction and the line connecting the proposed well and absorption field is 106 degrees as indicated on Fig. 4.

ANALYSIS - Upon the establishment of geologic, topographic, and development conditions at the site, the goal of our investigation was to: (1) establish 200 foot setbacks from all wells and absorption fields, if possible, (2) locate the absorption field at the subject site to minimize the risk of pollution of wells, and (3) provide recommendations for construction of the onsite sewage disposal system to reduce the risk of failure of the system.

Based on our observations and analysis it was determined that it is not possible to obtain 200 feet between the wells and absorption fields in the area. As indicated on Figs. 3 and 4, there are angles of 90 to 106 degrees between the resultant topographic and geologic flow directions and lines connecting the well and absorption field within 200 feet of each other. The angles exceed the recommended minimum 60 degree angle between a flow direction and a line connecting a well and absorption field within 200 feet of each other.

OSDS DESIGN - The proposed structure is to be a 3 bedroom home. The sewage load for a 3 bedroom dwelling is 450 gallons per day (GPD). Subsurface conditions at the proposed absorption field consist of 1 foot of silty sand topsoil and silty sand and gravel underlain to 2 feet by weathered migmatite.

The results of our investigation indicate an OSDS consisting of a septic tank and disposal field can be installed at the locations presented on Fig. 5. The OSDS location and design is presented on Figs. 5 and 6. The OSDS was designed on a sewage load of 450 GPD, and the assumption of a percolation rate of less than 30 minutes per inch (MPI) with the use of a sand filter system. Because of the 35% slope a 10 mil liner is required along the low side and ends of the field. A gradation analysis of a sample from the test pit is presented as Fig. 7. The gradation analysis indicates a percolation rate of less than 30 MPI. We believe that blasting may be required to open the disposal field excavation. Explosive charges should be limited to no more than 16 pounds per delay to reduce the risk of opening fractures which could contaminate wells.

Under current Jefferson County practice, it is allowable to replace Jefferson County specified sand filter material with a suitable filter material as specified by the design engineer. We believe the near surface silty sand would be suitable filter media if no

particles larger than 3 inches in diameter are used in the overexcavated 4 feet below the dispersal gravel layer. We recommend the onsite silty sand be collected from the materials from the excavation for the absorption field and other onsite excavations for use as filter media in the absorption field. Additional filter material may have to be generated from off site sources, if sufficient material is not found in proposed excavations.

The owner must realize an OSDS is considerably different from a public sewer system. The owner must be aware of and assume responsibility for continued maintenance of the system. We recommend the septic tank be pumped at least every 2 years. There are also daily considerations such as not putting plastic or other nonbiodegradable material down the septic system. Also, water use must be carefully monitored so toilets are not allowed to run when seals malfunction. To illustrate the point, it should be noted a running toilet will consume in excess of 1,000 GPD if allowed to run. As the system is designed for only 450 GPD, a 1000 gallon loading will flood and irrevocably harm the system and stress the onsite well.

CONCLUSIONS - The results of our investigation indicate the onsite sewage disposal system and proposed well can be constructed with a low risk of health hazards at the location shown on Figs. 2 and 5. The absorption field should be constructed in accordance with Jefferson County Health Department regulations.

LIMITATIONS - The results of our investigation are based on data provided in this report. If conditions exposed in the open excavation are considerably different from those described in this report, we recommend the observation of the open excavation by a representative of our office.

If there are any questions, or if we can be of further service, please call.

Very truly yours,

E.O. CHURCH, INC.



Edward O. Church, P.E.
Geological Engineer

3 copies sent

cc: Renaud Construction

FROM: RECONNAISSANCE GEOLOGIC MAP OF THE CONIFER QUADRANGLE, JEFFERSON COUNTY, COLORADO, USGS MAP MF-597

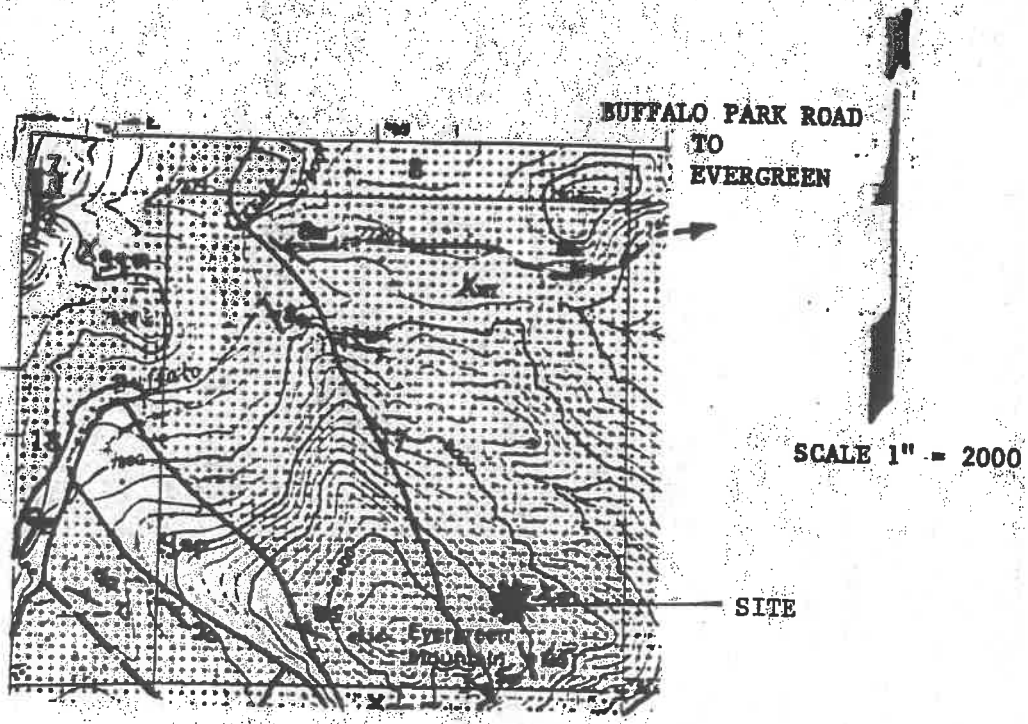

EXPLANATIONS:

Xm - Migmatite

Ysp - Silver Plume Quartz Monzonite

- Dot overprint pattern indicates areas intruded by Quartz Monzonite



VICINITY GEOLOGIC MAP

JOB NO. 2271

FIG. 1

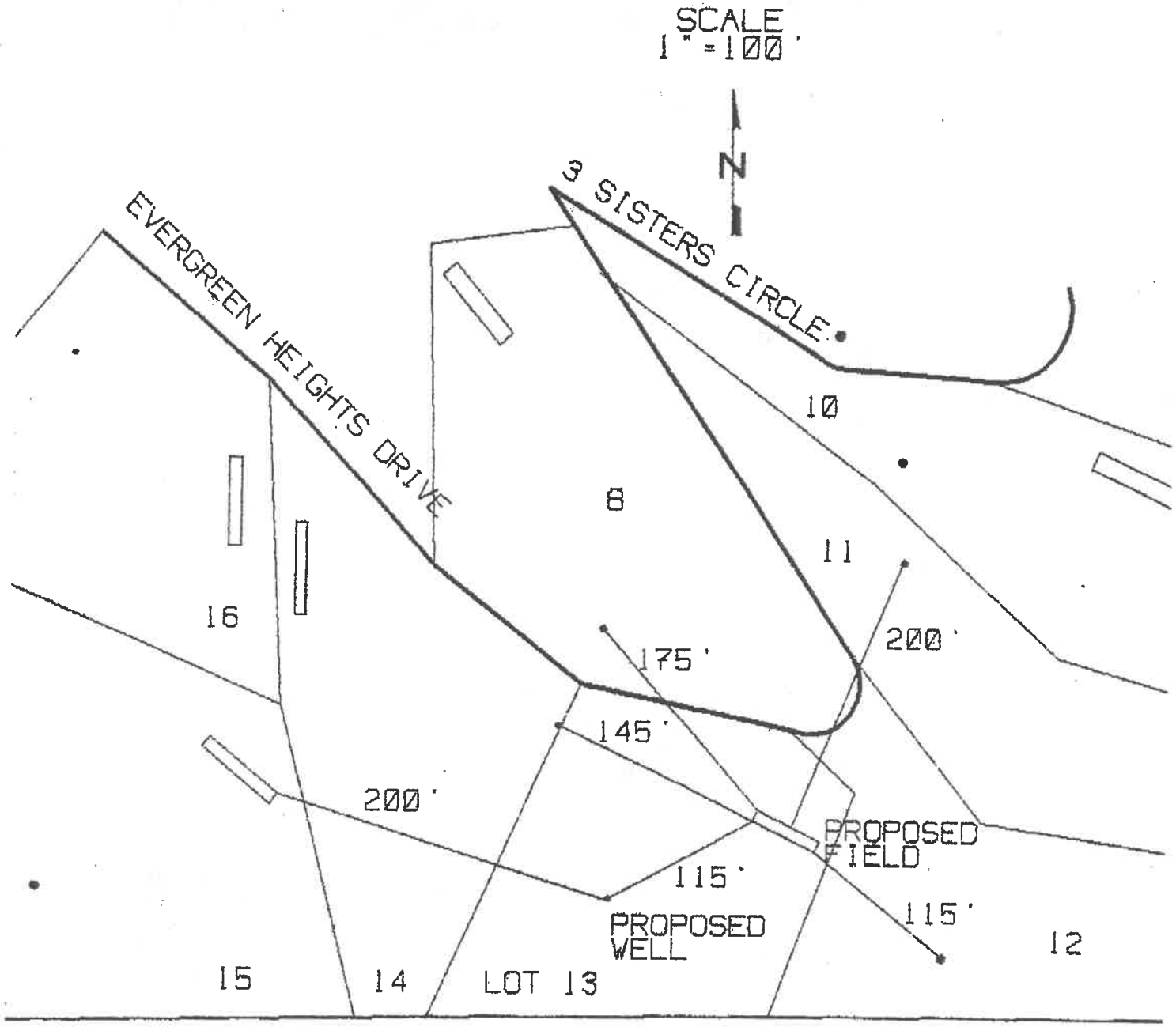

SITE PLAN

JOB NO. 2489

FIG. 2

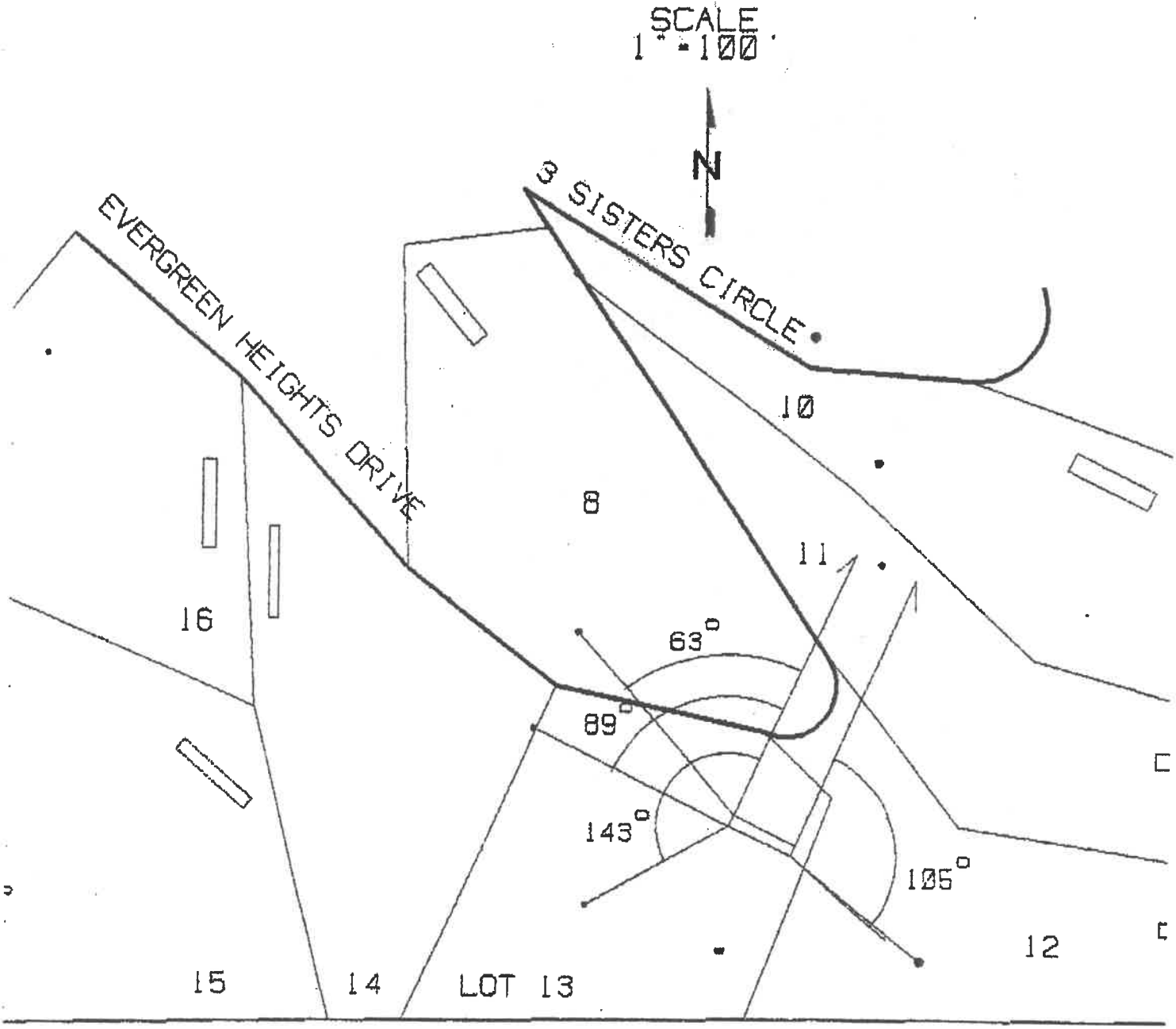

TOPOGRAPHIC ANALYSIS

JOB NO. 2489 FIG. 3

RESULTANT GEOLOGIC ANALYSIS:
SET A - FIELD. N38E. 59°
SET B - WELL. N25E. 28°

SCALE 1" = 100'

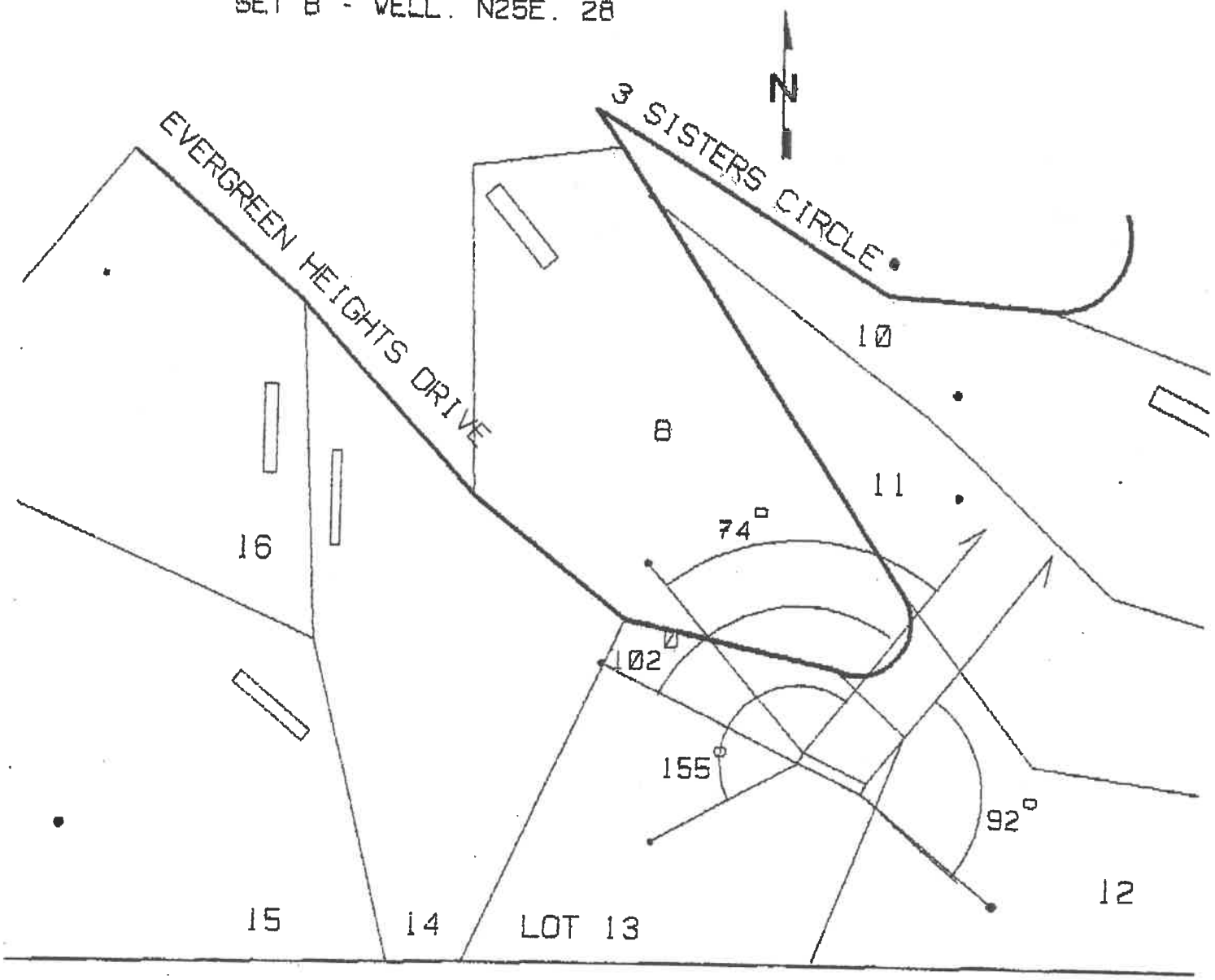

GEOLOGIC ANALYSIS

JOB NO. 2489

FIG. 4

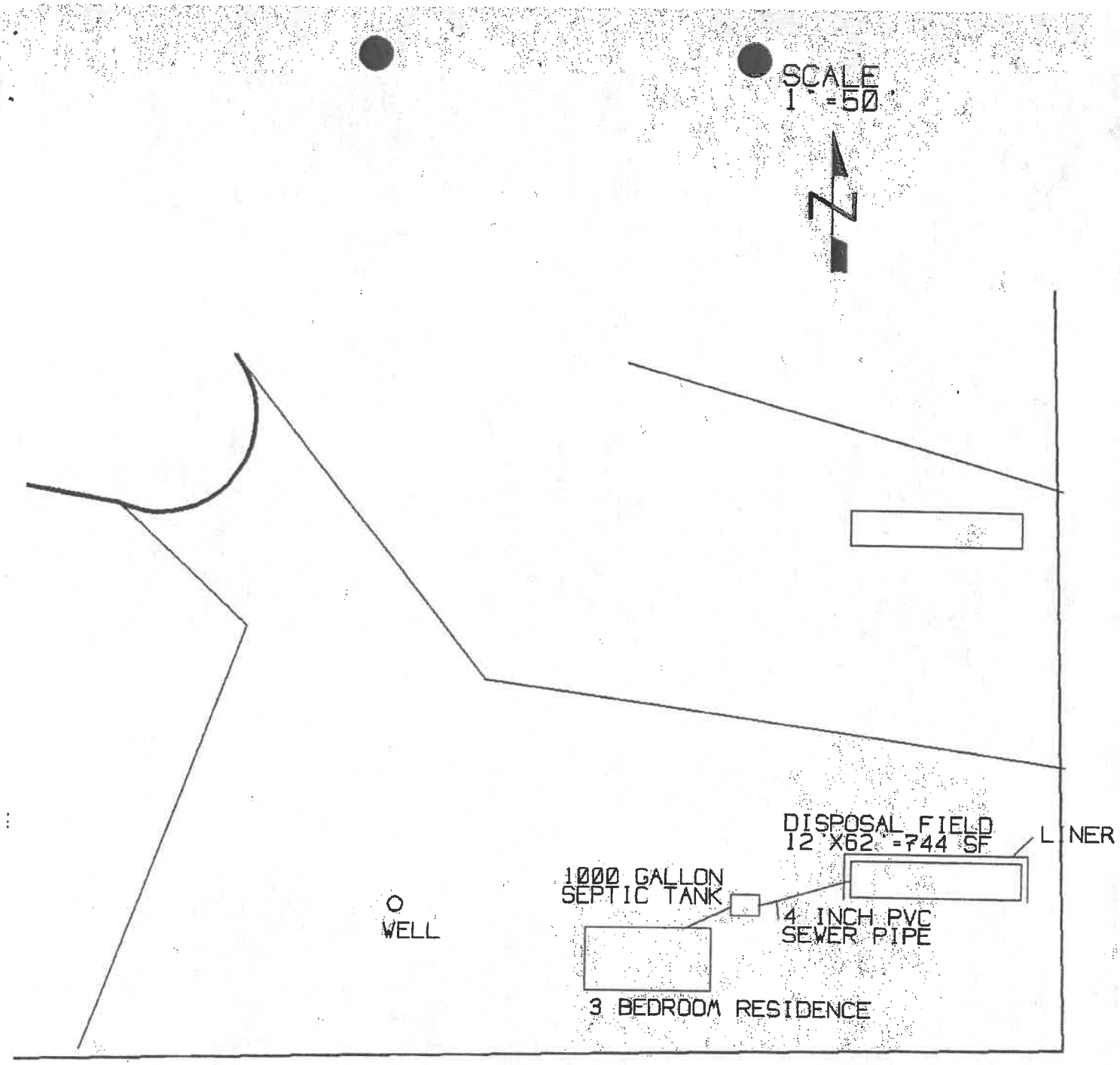

LOCATION OF OSDS

JOB NO. 2271

FIG. 5

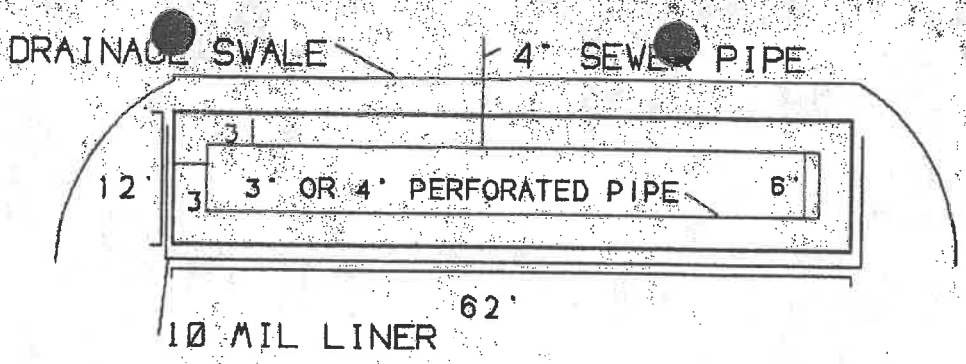

PLAN SECTION

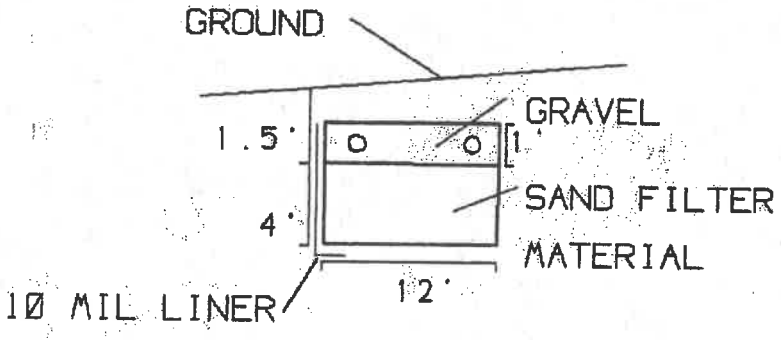

CROSS-SECTION

DESIGN CRITERIA:

NO. OF BEDROOMS - 3
LOAD. Q - 450 GPD
PERCOLATION RATE. T -
LESS THAN 30 MPI
$A = Q \times \sqrt{T} \times 1.5 / 5$
A = 739 S.F.

FIELD SPECIFICATIONS:

LENGTH - 62 FEET
WIDTH - 12 FEET
AREA - 744 S.F.
SAND FILTER MATERIAL
- JEFFCO SPECS.
GRAVEL - 1 1/2 INCH

TREATMENT UNIT SPECIFICATIONS:

1000 GALLON 2 COMPARTMENT SEPTIC TANK

DISPOSAL FIELD DETAILS

JOB NO. 2271

FIG. 6

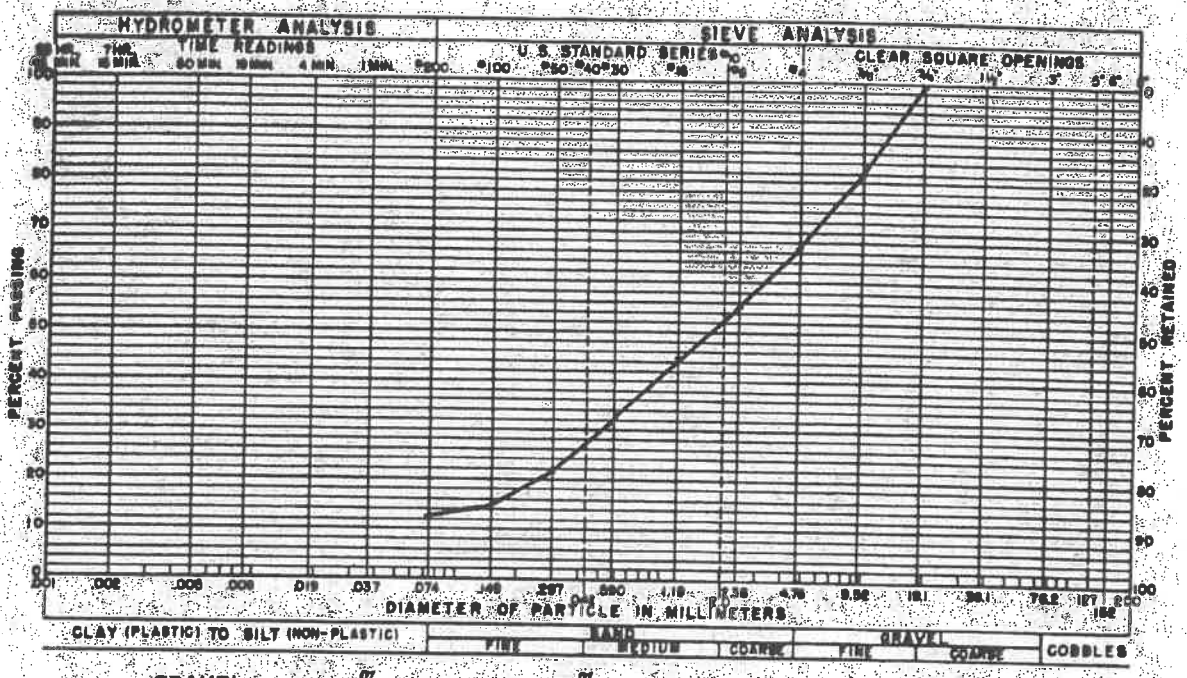

GRAVEL 33% SAND 54% SILT AND CLAY 13%

LIQUID LIMIT % PLASTICITY INDEX %

SAMPLE OF SAND, GRAVELLY, SILTY FROM PROFILE PIT @ 4 FEET

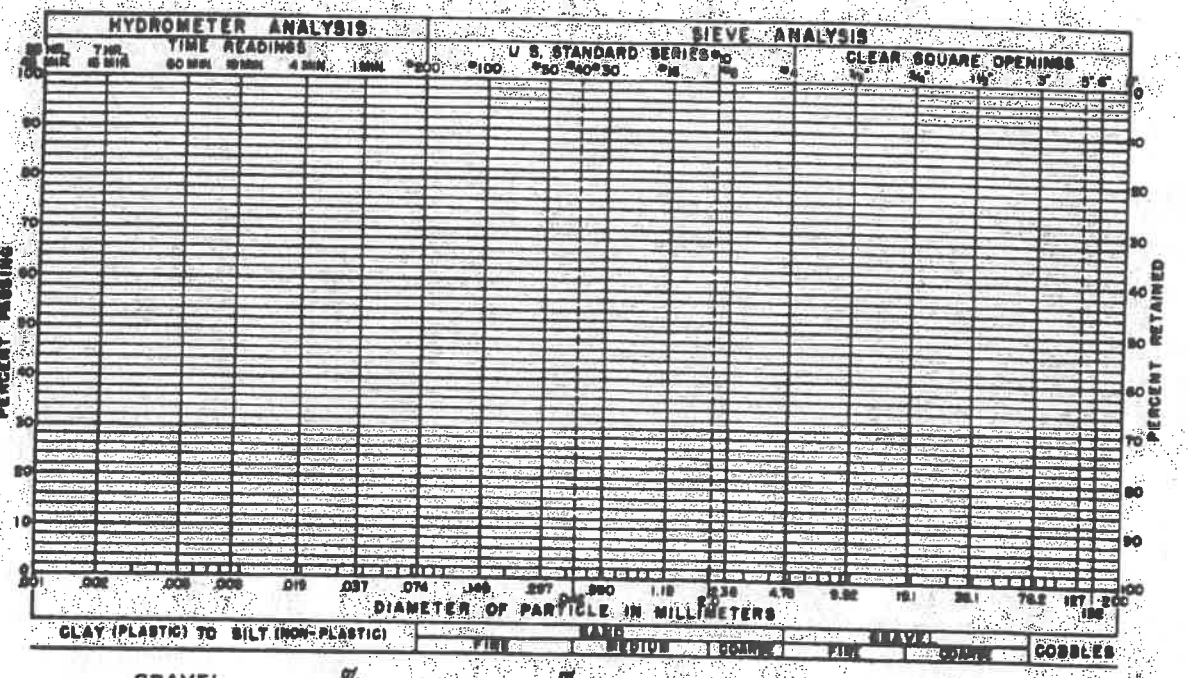

GRAVEL % SAND % SILT AND CLAY %

LIQUID LIMIT % PLASTICITY INDEX %

SAMPLE OF FROM

Form 12

GRADATION TEST RESULTS

JOB NO. 2271

FIG. 7

TABLE I - RESULTANT GEOLOGIC FLOW DIRECTION ANALYSIS

SET A, MIGMATITE

Dip Direction	Dip	Ranking	Apparent Dip	Weighted Dip
40	48	3	48	144
90	78	1	73	73
* 10	90	1	90	90
		5		307

307 / 5 = 61

RESULTANT GEOLOGIC DIP, SET A: DIP DIRECTION, 43 DEGREES; DIP, 61 DEGREES.

SET B, MIGMATITE

Dip Direction	Dip	Ranking	Apparent Dip	Weighted Dip
35	38	2	36	72
20	34	3	34	102
* 350	90	2	90	180
		7		354

354 / 7 = 51

RESULTANT GEOLOGIC DIP, SET B: DIP DIRECTION, 16 DEGREES; DIP, 51 DEGREES.

NOTE: Dip directions are by degrees (e.g., 0=N, 90=E, 180=S, and 270=W).

* Designates a flow on strike dip direction.

Job No. 2271

RECEIVED
#50878
APR 11 1991
150.00
Jefferson County Health Dept.

JEFFERSON COUNTY HEALTH DEPARTMENT
260 South Kipling Street, Lakewood, CO 80226
Phone: 232-6301

APPLICATION FOR INDIVIDUAL SEWAGE DISPOSAL SYSTEM PERMIT

(X)NEW ( )REPAIR ( )RENEWAL ( )ADDITION

Name of Owner: Gregg & Company

Mailing Address of Owner: ~~9279 William Cody~~ PO Box 3344, Evergreen CO 80439

Name of Applicant: Same Phone: 674-7939

Mailing Address of Applicant: Same

Location of Proposed System:
LEGAL DESCRIPTION: Lot 12 Evergreen Heights

Street Address:

Size of Property: 1.07 Ac
Type of Structure: (x)Single Family Dwelling - No. of Bedrooms 3
( )Other

Water Supply: (X)Private well ( )Public

Type of proposed Individual Sewage Disposal System: Mountain Septic

The following data must be provided with this application:
1. Soil test data.
2. Sewer system design for systems in mountain areas and certain other areas.
3. A plot plan showing relevant features.
4. A geologic report if the separation distance between any well and absorption field is between 100 and 200 feet.
5. Adjacent property information.

Application Fee: NEW PERMIT/ADDITION - $150.00
REPAIR - $ 75.00
RENEWAL - $ 75.00

Permit to be mailed to ( )Owner ( )Applicant (X)Picked Up

PERMIT MUST BE ISSUED BEFORE A BUILDING PERMIT CAN BE OBTAINED.

Application for an individual sewage disposal system permit is hereby submitted. The individual sewage disposal system will be constructed and installed in accordance with the regulations governing individual sewage disposal systems in Jefferson County. I hereby acknowledge that the above information is true and that false information will invalidate this application or subsequent permit.

Signature of Owner: [signature] Application Date: 4-10-91

Jefferson County Certificate of Water and Sewer Service Availability

NOTE TO APPLICANT: A building permit will not be issued without this Certificate of Sewer and Water Service Availability signed by the District or agency supplying services.

Job Address _____ Date _____

Legal Description: lot 12 Evergreen Heights

Use of Building _____

See reverse side for facility requiring Health Department Plan Review

Owner _____ Address _____ Telephone _____

SEWER

Name of Sanitation District or Agency _____

( ) SEWER SERVICE AVAILABLE (X) SEWER SERVICE NOT AVAILABLE

INDIVIDUAL SEWAGE PERMIT NO. 13791

Comments or Conditions: Three bedroom single family residence

I hereby certify that availability of service is as indicated above.

Signature of Authorized Agent _____ Date _____

Review:
Jefferson County Health
or Zoning Department _____ April 22, 1991
Signature Date

WATER

Name of Water District or Agency _____

( ) WATER SERVICE AVAILABLE ( ) WATER SERVICE NOT AVAILABLE

COLORADO WELL PERMIT NO. _____

Comments or Conditions: _____

I hereby certify that availability of service is as indicated above.

Signature of Authorized Agent _____ Date _____

Review:
Jefferson County Health
or Zoning Department _____ _____
Signature Date