PART 3: TECHNICAL SPECIFICATIONS

PART 3: TECHNICAL SPECIFICATIONS

DOCUMENT TITLE
DIVISION 00 and DIVISION 01 - GENERAL REQUIREMENTS

01 22 00 Unit Price Form
01 31 00 Project Management and Coordination
01 33 00 Submittals
01 41 00 Permits
01 45 00 Quality Control
01 55 00 Access
01 57 00 Temporary Controls
01 57 16 Rodent Control
01 62 00 Substitutions
01 74 00 Cleaning Up
01 70 00 Project Closeout

DIVISION 02 – SITE WORK

02 41 13 Site Preparation

DIVISION 03 – CONCRETE

03 30 00 Cast In Place Concrete

DIVISION 10 - SPECIALTIES

10 14 00 Signage

DIVISION 11 - EQUIPMENT

11 68 30 Play Equipment

DIVISION 12 - FURNISHINGS

12 93 00 Site Furnishings

DIVISION 31 - EARTHWORK

31 20 00 Earthwork
31 25 00 Erosion and Sedimentation Controls

DIVISION 32- EXTERIOR IMPROVEMENTS

32 13 13 Concrete Pavements
32 18 16 Playground Protective Surfacing

32 30 00 Site Improvements
32 31 00 Fencing

DIVISION 33- UTILITIES

33 40 00 Storm Drainage Utilities

SECTION 01 31 00
PROJECT MANAGEMENT AND COORDINATION

PART 1 - GENERAL

1.01 GENERAL PROVISIONS

A. The Conditions of the Contract and other Sections of Division I, General Requirements apply to this Section.

1.02 PROJECT MANAGEMENT

A. The Contractor must use sufficient personnel and adequate equipment to complete all the necessary work requirements within a minimum period of time.

B. Unless specifically authorized by the Owner, in writing, the work must be conducted within the hours stipulated in the Information For Bid issued by the City of Somerville.

C. The Contractor is responsible for the security of partially completed work until the project is accepted by the Owner.

1.03 PROJECT MEETINGS

A. Pre-construction conference: Within 5 days following a Notice to Proceed, the Contractor shall schedule a pre-construction conference to be held at the project location. This conference will be attended by the project superintendent as a minimum. The contractor shall bring to this conference the following documents more fully described elsewhere in this specification:

1. Project Progress Schedule
2. Schedule of Values
3. Submittal Register
4. Notification of Product Substitution
5. Initial submittals covering first 30 days of construction
6. Site phone number and after hours point of contact and phone number.

B. Preinstallation Conferences: Conduct a preinstallation conference at Project site before each construction activity that requires coordination with other construction.

1. Attendees: Owner, Landscape Architect, installer and representatives of manufacturers and fabricators involved in or affected by the installation and its coordination or integration with other materials and installations that have preceded or will follow, shall attend the meeting.
2. Agenda: Review progress of other construction activities and preparations for the particular activity under consideration, including requirements for the following:
    1) The Contract Documents.
    2) Related requests for interpretations (RFIs).
    3) Related Change Orders.
    4) Deliveries.
    5) Submittals.
    6) Review of mockups.
    7) Possible conflicts.

8) Compatibility problems.
9) Time schedules.
10) Weather limitations.
11) Manufacturer's written recommendations.
12) Warranty requirements.
13) Compatibility of materials.
14) Acceptability of substrates.
15) Temporary facilities and controls.
16) Space and access limitations.
17) Regulations of authorities having jurisdiction.
18) Testing and inspecting requirements.
19) Installation procedures.
20) Coordination with other work.
21) Required performance results.
22) Protection of adjacent work.
23) Protection of construction and personnel.

3. Record significant conference discussions, agreements, and disagreements, including required corrective measures and actions.
4. Reporting: Distribute minutes of the meeting to each party present and to parties who should have been present.
5. Do not proceed with installation if the conference cannot be successfully concluded. Initiate whatever actions are necessary to resolve impediments to performance of the Work and reconvene the conference at earliest feasible date.

C. Progress Meetings: Conduct progress meetings at weekly intervals. Coordinate dates of meetings with preparation of payment requests.

1. Attendees: In addition to representatives of Owner, and Landscape Architect, each contractor, subcontractor, supplier, and other entity concerned with current progress or involved in planning, coordination, or performance of future activities shall be represented at these meetings. All participants at the conference shall be familiar with Project and authorized to conclude matters relating to the Work.
2. Agenda: Review and correct or approve minutes of previous progress meeting. Review other items of significance that could affect progress. Include topics for discussion as appropriate to status of Project.
    1) Contractor's Construction Schedule: Review progress since the last meeting. Determine whether each activity is on time, ahead of schedule, or behind schedule, in relation to Contractor's Construction Schedule. Determine how construction behind schedule will be expedited; secure commitments from parties involved to do so. Discuss whether schedule revisions are required to ensure that current and subsequent activities will be completed within the Contract Time.
        a) Review schedule for next period.
    2) Review present and future needs of each entity present, including the following:
        a) Interface requirements.

b) Sequence of operations.

c) Status of submittals.

d) Deliveries.

e) Off-site fabrication.

f) Access.

g) Site utilization.

h) Temporary facilities and controls.

i) Work hours.

j) Hazards and risks.

k) Progress cleaning.

l) Quality and work standards.

m) Status of correction of deficient items.

n) Field observations.

o) Requests for interpretations (RFIs).

p) Status of proposal requests.

q) Pending changes.

r) Status of Change Orders.

s) Pending claims and disputes.

t) Documentation of information for payment requests.

3) Minutes: Landscape Architect will record and distribute the meeting minutes.

4) Reporting: Distribute minutes of the meeting to each party present and to parties who should have been present.

a) Schedule Updating: Contractor's Construction Schedule shall be updated at each progress meeting where revisions to the schedule have been made or recognized. Issue revised schedule concurrently with the report of each meeting.

1.04 COORDINATION

A. Project Schedule. The Contractor shall submit at the pre-construction conference for approval to the Owner a detailed operational schedule showing the sequence of operations prior to commencement of any work at the site. This project schedule will be in the form of a CPM, PERT or Gant chart which clearly reflects project tasks to be completed in a logical sequence. Any changes to this operational plan must be approved by the Owner. The Contractor shall keep this schedule updated to reflect actual progress, and will revise the schedule if required to do so based on substantial departures from the planned progress of the work.

B. Project Superintendent. The Contractor must retain a competent full time representative, satisfactory to the Owner. This representative shall not be changed, except with the consent of the Owner. The representative shall be in full charge of the work.

END OF SECTION

SECTION 01 33 00
SUBMITTALS

PART 1 - GENERAL

1.01 RELATED DOCUMENTS

A. Consult the individual sections of the specifications for the specific submittals required under those sections and for further details and descriptions of the requirements.

1.02 GENERAL PROCEDURES FOR SUBMITTALS

A. Submittal Register. Within five (5) days of receipt of a Notice to Proceed, the Contractor will furnish to the Landscape Architect a complete listing of all submittals (Shop Drawings, Manufacturers Data, Samples, etc.) required by these specifications in tabular form. This form will include columns sufficient to manage and track the submission and action for each submission. The Contractor will revise and update this form upon request of the Landscape Architect.

B. Timeliness - The Contractor shall transmit each submittal to the Landscape Architect sufficiently in advance of performing related Work or other applicable activities so that the installation is not delayed by processing times, including disapproval and resubmittal (if required), coordination with other submittals, testing, purchasing, fabrication, delivery, and similar sequenced activities. No extension of time will be authorized because of the Contractor's failure to transmit submittals to the Landscape Architect in advance of the Work.

C. Sequence - The Contractor shall transmit each submittal in a sequence which will not result in the Landscape Architect’s approval having to be later modified or rescinded by reason of subsequent submittals which should have been processed earlier or concurrently for coordination.

D. Contractor's Review and Approval - Only submittals received from and bearing the stamp of approval of the Contractor will be considered for review by the Landscape Architect. Submittals shall be accompanied by a transmittal notice stating name of Project, date of submittal, "To", "From" (Contractor, Subcontractor, Installer, Manufacturer, Supplier), Specification Section, or Drawing No. to which the submittal refers, purpose (first submittal, resubmittal), description, remarks, distribution record, and signature of transmitter.

E. Landscape Architect’s Action- The Landscape Architect will review the Contractor's submittals and return them with one of the following actions recorded thereon by appropriate markings:

1. Final Unrestricted Release: Where marked "Approved" the Work covered by the submittal may proceed provided it complies with the requirements of the Contract Documents.

2. Final-But-Restricted Release: When marked “Approved as Noted” the Work may proceed provided it complies with the Landscape Architect’ s notations or corrections on the submittal and complies with the requirements of the Contract Documents. Acceptance of the Work will depend on these compliances.

3. Returned for Resubmittal: When marked "Revise and Resubmit" or "Disapproved" the Work covered by the submittal (such as purchasing, fabrication, delivery, or other activity) should not proceed. The submittal should be revised or a new submittal resubmitted without delay, in accordance with the Landscape Architect's notations stating the reasons for returning the submittal.

F. Processing - All costs for printing, preparing, packaging, submitting, resubmitting, and mailing, or delivering submittals required by this contract shall be included in the Contract Sum.

1.03 OR EQUALS

A. Definition - Whenever a specification section names one or more brands for a given item, and the Contractor wishes to submit, for consideration, another brand, the submission shall be considered an "or-equal" or a "material substitution". For the purposes of this Contract, the terms "or-equal" and "material substitution" shall be considered synonymous.

B. In no case may an item be furnished on the Work other than the item named or described, unless the Landscape Architect, with the Owner's written concurrence, shall consider the item equal to the items so named or described.

C. The equality of items offered as "equal" to items named or described shall be proved to the satisfaction of the Landscape Architect at the expense of the Contractor submitting the substitution.

D. The Landscape Architect and/or the Owner may require that full size samples of both the specified and proposed products be submitted for review and evaluation. The Contractor shall bear full cost for providing, delivering, and disposal of all such samples.

E. The Contractor shall assume full responsibility for the performance of any item submitted as an "Or-Equal" and assume the costs of any changes in any Work which may be caused by such substitution.

F. Or Equal Approval Process - On the transmittal, or on a separate sheet attached to the submission, the Contractor shall direct attention to any deviations, including minor limitations and variations, from the Contract Documents.

1. The Contractor shall submit to the Landscape Architect for consideration of any or-equal substitution a written point-by-point comparison containing the name and full particulars of the proposed product and the product named or described in the Contract Documents.

2. Such submittal shall in no event be made later than 60 calendar days prior to the incorporation of the item into the Work. This requirement may be waived by the Landscape Architect upon written request.

3. Upon receipt of a written request for approval of an or-equal substitution, the Landscape Architect shall investigate whether the proposed item shall be considered equal to the item named or described in the Contract Documents. Upon conclusion of the investigation, the Landscape Architect shall promptly advise the Contractor that the item is, or is not, considered acceptable as on Or-Equal substitution. Such written notice must have the concurrence of the Owner.

1.04 SUBMISSION OF SHOP DRAWINGS

A. Shop Drawings shall be complete and to scale, giving all information necessary or requested in the individual section of the specifications. They shall also show adjoining Work and details of connection thereto.

B. Shop Drawings shall be for whole systems. Partial submissions will not be accepted.

C. The Landscape Architect reserves the right to review and approve shop drawings only after approval of related product data and samples.

D. Shop drawings shall be properly identified and contain the name of the project, name of the firm submitting the shop drawings, shop drawing number, date of shop drawings and revisions, Contractor's stamp of approval, and sufficient spaces near the title block for the Landscape Architect's stamp.

E. The Contractor shall submit to the Landscape Architect shop drawings as PDF file(s) formatted at a legible scale. Each submittal shall be accompanied by a transmittal notice.

F. When the shop drawing is returned by the Landscape Architect with the stamp "Revise and Resubmit" or "Disapproved", the Contractor shall correct the original drawing or prepare a new

drawing and resubmit six prints thereof to the Landscape Architect for approval. This procedure shall be repeated until the Landscape Architect's approval is obtained.

G. When the shop drawing is returned by the Landscape Architect with the stamp "Approved" or "Approved as Corrected", the Contractor shall provide and distribute the prints for all Contractors and Subcontractors use.

H. The Contractor shall maintain one full set of approved shop drawings at the site.

1.05 SUBMISSION OF PRODUCT DATA

A. The Contractor shall submit 6 copies of Product Data to the Landscape Architect. All such data shall be specific and identification of material or equipment submitted shall be clearly marked in ink. Data of general nature will not be accepted.

B. Product Data shall be accompanied by a transmittal notice. The Contractor's stamp of approval shall appear on the printed information itself, in a location which will not impair legibility.

C. Product Data returned by the Landscape Architect as "Disapproved" shall be resubmitted in 6 copies until the Landscape Architect's approval is obtained.

D. When the Product Data is acceptable, the Landscape Architect will stamp them "Approved" or "Approved as Corrected", retain 2 copies, and return 4 copies to the Contractor. The Contractor shall provide and distribute additional copies as may be required to complete the Work.

E. The Contractor shall maintain one full set of approved, original, Product Data at the site.

1.06 SUBMISSION OF SAMPLES

A. Unless otherwise specified in the individual section, the Contractor shall submit two specimens of each sample required for submission.

B. Samples shall be of adequate size to permit proper evaluation of materials. Where variations in color or in other characteristics are to be expected, samples shall show the maximum range of variation. Materials exceeding the variation of approved samples will not be approved on the Work.

C. Samples of items of material finishes shall be submitted all at once to permit a coordinated selection of colors and finishes.

D. Samples which can be conveniently mailed shall be sent directly to the Landscape Architect, accompanied by a transmittal notice. All transmittals shall be stamped with the Contractor's approval stamp of the material submitted.

E. All other samples shall be delivered to the Project Representative with sample identification tag attached and properly filled in. Transmittal notice of samples so delivered with the Contractor's stamp of approval shall be mailed to the Landscape Architect.

F. If a sample is rejected by the Landscape Architect, a new sample shall be resubmitted in the manner specified herein above. This procedure shall be repeated until the sample is approved by the Landscape Architect.

G. Samples will not be returned unless return is requested at the time of submission. The right is reserved to require submission of samples whether or not particular mention is made in the specifications, at no additional cost to the Owner.

PART 2 - PRODUCTS

(Not Applicable)

PART 3 - EXECUTION

(Not Applicable)

END OF SECTION

SECTION 01 41 00
PERMITS

PART 1 - GENERAL

1.01 PERMITS:

A. The Contractor shall be responsible for obtaining all permits required to complete the work of this contract, to provide all coordination and furnish all bonds, assurances and required warranties. Should any street work be required, a contractor specifically approved by the City shall perform it.

B. All materials and equipment shall conform to permit requirements and the City's Standards for utilities, excavation, backfilling, patching, and surveying, or other work unless stated in these specifications. The Contractor shall coordinate as necessary with the appropriate municipal officials and/or private utility.

C. The Contractor shall prepare permit applications and obtain applicable permits after the contract is awarded. All required permits shall be obtained; including, but not limited to the following:

1. Trench Permit for utility installation
2. Parking Permits as needed and appropriate
3. Permit for excavation in the Public Way (520 CMR 14.00) as needed

D. The contractor will also contact DigSafe 72 hours prior to starting work, submit a Traffic Management Plan, and submit a Covid 19 Job Hazard Analysis (JHA) and a Site-Specific Safety Plan (SSSP), in compliance with City regulations.

1.02 CITIZENSERVE:

A. All City of Somerville Permits may be obtained through the City of Somerville CitizenServe web portal: https://www.somervillema.gov/citizenserve

1.03 FEES:

A. There are no permit fees charged for City of Somerville Park construction projects.

1.04 DIGSAFE:

A. Contact DigSafe seventy-two (72) hours prior to initiating work at #1-888-344-7233 or 811. Contractor shall submit the DigSafe ticket number to the Owner and Owner's Representative prior to commencing the Work.

1.05 TRAFFIC MANAGEMENT PLAN:

A. The Contractor that is selected will provide a Traffic Management Plan (TMP) with details of trucking routes and project parking. That TMP submission (as well as other City permit requests) can be submitted to the City Engineering Department through the City's CitizenServe web portal. As mentioned elsewhere, there are no City permit fees for City Park construction projects. Following is the link to the City's CitizenServe permit application: https://www.somervillema.gov/citizenserve

1.06 COVID 19 SAFETY REQUIREMENTS:

A. Department of Inspectional Services (ISD) Covid-19 safety requirements are listed on the City of Somerville Department of Inspectional Services ISD webpage and include links to the Job Hazard Analysis (JHA) and a Site-Specific Safety Plan (SSSP) forms both of which are

required. https://www.somervillema.gov/isd The contractor shall submit the JHA and SSSP forms to the City's Project Manager, not ISD. Once submitted, the Project Manager shall review the JHA and SSSP Forms with ISD staff and work with the contractor to implement any necessary changes. Both the JHA and SSSP shall be approved prior to the commencement of any work.

1.07 RELATED REQUIREMENTS:

A. Section 01 55 00 ACCESS

PART 2 - MATERIALS

2.01 GENERAL:

A. All materials and equipment shall conform to permit requirements and the City's standards for utilities, excavation, backfill, patching, and surveying or other work unless otherwise stated in these specifications. Coordinate as necessary with the appropriate City official and/or private utility.

PART 3 - EXECUTION

3.01 GENERAL:

A. Execute all work per permit requirements. All work to be approved by City Inspectors; sidewalk ramps to be approved by City Engineer.

END OF SECTION

SECTION 01 45 00
QUALITY CONTROL

PART 1 - GENERAL

1.01 RELATED DOCUMENTS

A. Drawings and general provisions of the Contract, including General and Supplementary Conditions and other Division 1 Specification Sections, apply to this Section.

1.02 SUMMARY

A. This Section includes administrative and procedural requirements for quality-control services.

B. Quality-control services include inspections, tests, and related actions, including reports performed by Contractor, by independent agencies, and by governing authorities. They do not include contract enforcement activities performed by Landscape Architect.

C. Inspection and testing services are required to verify compliance with requirements specified or indicated. These services do not relieve Contractor of responsibility for compliance with Contract Document requirements.

D. Requirements of this Section relate to materials and systems assembled and constructed at the site and to product compliance with specified performance characteristics.

1. Specific quality-control requirements for individual construction activities are specified in the Sections that describe those activities. Requirements in those Sections may also cover production of standard products.

2. Specified inspections, tests, and related actions do not limit Contractor's quality-control procedures that facilitate compliance with Contract Document requirements.

3. Requirements for Contractor to provide quality-control services required by Landscape Architect, Owner, or authorities having jurisdiction are not limited by provisions of this Section.

1.03 RESPONSIBILITIES

A. Contractor Responsibilities: Unless otherwise indicated as the responsibility of another identified entity, Contractor shall provide inspections, tests, and other quality-control services specified elsewhere in the Contract Documents and required by authorities having jurisdiction. Materials testing will be performed by an independent testing firm certified to complete the tests indicated, subject to Owner approval. Cost for these services are included in the Contract Sum.

B. Retesting: The Contractor is responsible for retesting where results of inspections, tests, or other quality-control services prove unsatisfactory and indicate noncompliance with Contract Document requirements, regardless of whether the original test was Contractor's responsibility.

1. The cost of retesting construction, revised or replaced by the Contractor, is the Contractor's responsibility where required tests performed on original construction indicated noncompliance with Contract Document requirements.

C. Associated Services: Cooperate with agencies performing required inspections, tests, and similar services, and provide reasonable auxiliary services as requested. Notify the agency sufficiently in advance of operations to permit assignment of personnel. Auxiliary services required include, but are not limited to, the following:

1. Provide access to the Work.

2. Furnish incidental labor and facilities necessary to facilitate inspections and tests.
3. Test adequate quantities of representative samples of materials that require testing or assist the agency in taking samples.
4. Provide facilities for storage and curbing of test samples.
5. Deliver samples to testing laboratories.
6. Provide the agency with a preliminary design mix proposed for use for materials mixes that require control by the testing agency.
7. Provide security and protection of samples and test equipment at the Project Site.

D. Duties of the Testing Agency: The independent agency engaged to perform inspections, sampling, and testing of materials and construction specified in individual Sections shall cooperate with the Landscape Architect and the Contractor in performance of the agency's duties. The testing agency shall provide qualified personnel to perform required inspections and tests.

1. The agency shall notify the Landscape Architect and the Contractor promptly of irregularities or deficiencies observed in the Work during performance of its services.
2. The agency is not authorized to release, revoke, alter, or enlarge requirements of the Contract Documents or approve or accept any portion of the Work.
3. The agency shall not perform any duties of the Contractor.

E. Coordination: Coordinate the sequence of activities to accommodate required services with a minimum of delay. Coordinate activities to avoid the necessity of removing and replacing construction to accommodate inspections and tests.

1. The Contractor is responsible for scheduling times for inspections, tests, taking samples, and similar activities.

1.04 SUBMITTALS

A. The independent testing agency shall submit a certified written report, in duplicate, of each inspection, test, or similar service to the Landscape Architect. Written reports of each inspection, test, or similar service include, but are not limited to, the following:

1. Date of issue.
2. Project title and number.
3. Name, address, and telephone number of testing agency.
4. Dates and locations of samples and tests or inspections.
5. Names of individuals making the inspection or test.
6. Designation of the Work and test method.
7. Identification of product and Specification Section.
8. Complete inspection or test data.
9. Test results and an interpretation of test results.
10. Ambient conditions at the time of sample taking and testing.
11. Comments or professional opinion on whether inspected or tested Work compiles with Contract Document requirements.
12. Name and signature of laboratory inspector.
13. Recommendations on retesting.

1.05 QUALITY ASSURANCE

A. Qualifications for Service Agencies: Engage inspection and testing service agencies, including independent testing laboratories, that are prequalified as complying with the American Council of Independent Laboratories' "Recommended Requirements for Independent Laboratory Qualification" and that specialize in types of inspections and tests to be performed.

1. Each independent inspection and testing agency engaged on the Project shall be authorized by authorities having jurisdiction to operate in the state where the Project is located.

PART 2 - PRODUCTS

(Not Applicable)

PART 3 - EXECUTION

3.01 REPAIR AND PROTECTION

A. General: Upon completion of inspection, testing, sample taking and similar services, repair damaged construction and repair substrates and finishes.

B. Protect construction exposed by or for quality-control service activities, and protect repaired construction.

C. Repair and protection are the Contractor's responsibility, regardless of the assignment of responsibility for inspection, testing, or similar services.

END OF SECTION

SECTION 01 57 00
TEMPORARY CONTROLS

PART 1 - GENERAL

1.01 DESCRIPTION:

A. The work covered by this section of the specifications consists of furnishing all labor, materials, tools and equipment and performing all work required for the prevention of environmental pollution during and as a result of construction operations under this contract.

1.02 REQUIREMENTS INCLUDED

A. Provide and maintain methods, equipment, and temporary construction, as necessary to provide controls over environmental conditions at the construction site and related areas under Contractor's control; remove physical evidence of temporary facilities at completion of work.

1.03 RELATED REQUIREMENTS

A. Section 02 41 13 – SITE PREPARATION, temporary construction fence

B. Section 01 74 00 - CLEANING-UP

1.04 NOISE CONTROL

A. Noise levels shall not exceed those stipulated by Occupational Safety and Health Administration or the City of Somerville noise ordinance.

1.05 DUST CONTROL

A. Provide positive methods and apply dust control materials to minimize raising dust from construction operations, and provide positive means to prevent air-borne dust from dispersing into the atmosphere. Dust control and protection shall be in place at all times. Construction activities shall cease until dust is brought under control.

1.06 SURFACE WATER AND GROUNDWATER CONTROL

A. Provide methods to control surface water to prevent damage to project, site, and adjoining properties.

B. Dispose of drainage water in a manner to prevent flooding, erosion, sedimentation, or other damage to any portion of the site or to adjoining areas and properties.

1.07 DEBRIS CONTROL

A. Maintain all areas under Contractor's control free of extraneous debris.

B. Initiate and maintain a specific program to prevent accumulation of debris at construction site.

1. Provide containers for deposit and removal of debris.

1.08 POLLUTION CONTROL

A. Provide methods, means, and facilities required to prevent contamination of soil, water, or atmosphere by the discharge of noxious substances from construction operations.

B. Take special measures to prevent harmful substances from entering public waters.

1. Prevent disposal of wastes, effluents, chemicals, or other such substances adjacent to streams, or in sanitary or storm sewers.

C. Provide systems for control of atmospheric pollutants.

PART 2 - PRODUCTS

(Not Applicable)

PART 3 - EXECUTION

3.01 NOTIFICATION AND STOPPAGE OF WORK:

A. The Landscape Architect will notify the Contractor in writing of any observed non-compliance with the Contract Documents. The Contractor shall, after receipt of such notice, immediately take corrective action. Such notice, when delivered to the Contractor or his authorized representative at the site of the work, shall be deemed sufficient for the purpose. If the Contractor fails to act promptly, the Owner may order stoppage of all or part of the work through the Landscape Architect until satisfactory corrective action has been taken. No claim for an extension of time or for excess costs or damage incurred by the Contractor as a result of time lost due to any stop work orders shall be made unless it was later determined that the Contractor was in compliance.

B. The notification process described under paragraph A above does not relieve the Contractor of the contractual obligation for continuous compliance with the Contract Documents.

3.02 AREA OF CONSTRUCTION ACTIVITY:

A. Insofar as possible, the Contractor shall confine their construction activities to those areas defined by the plans and specifications. All land resources within the project boundaries and outside the limits of permanent work performed under this contract shall be preserved in their present condition or be restored to a condition after completion of construction at least equal to that which existed prior to work under this contract.

3.03 PROTECTION OF WATER RESOURCES:

A. The Contractor shall not pollute water bodies with fuels, oils, bitumens, calcium chloride, acids or other harmful materials. It is the Contractor's responsibility to comply with all applicable Federal, State, County and Municipal laws regarding pollution of rivers and streams.

B. Special measures should be taken to insure against spillage of any pollutants into public waters.

3.04 PROTECTING AND MINIMIZING EXPOSED AREAS:

A. The Contractor shall limit the area of land which is exposed and free from vegetation during construction. In areas where the period of exposure will be greater than two (2) months, temporary vegetation, mulching or other protective measures shall be provided.

B. The Contractor shall take account of the conditions of the soil where temporary cover crop will be used to ensure that materials used for temporary vegetation are adaptive to the sediment control. Materials to be used for temporary vegetation shall be approved by the Landscape Architect.

C. Contractor shall minimize the area of exposed soils and all excavated areas shall be covered if not active.

3.05 LOCATION OF STORAGE AREAS:

A. The location of the Contractor's storage areas for equipment and/or materials shall be located on cleared portions of the job site or areas to be cleared as a part of this project, and shall require written approval of the Landscape Architect. Plans showing storage facilities for equipment and materials shall be submitted for approval of the Landscape Architect.

B. No excavated materials or materials used in backfill operations shall be deposited within a minimum distance of one hundred (100) feet of any watercourse or any drainage facility. Adequate measures for erosion and sediment control shall be employed to protect any downstream areas from siltation.

C. There shall be no storage of equipment or materials within one hundred feet of delineated wetlands as indicated on the Drawings.

D. Storage areas in cross-country locations shall be restored to pre-construction conditions with the planting of native species of trees and shrubs.

3.06 PROTECTION OF LANDSCAPE:

A. The Contractor shall not deface, injure, or destroy trees or shrubs nor remove or cut them without written authority from the Owner. No ropes, cables, or guys shall be fastened to or attached to any existing nearby trees for anchorages unless specifically authorized by the Landscape Architect. Excavating machinery and cranes shall be of suitable type and be operated with care to prevent injury to trees which are not to be removed, particularly overhanging branches and limbs. The Contractor shall, in any event, be responsible for any damage resulting from such use.

B. Branches, limbs, and roots shall not be cut except by permission of the Landscape Architect. All cutting shall be smoothly and neatly done without splitting or crushing. When there is unavoidable injury to branches, limbs and trunks of trees, the injured portions shall be neatly trimmed and covered with an application of grafting wax or tree healing paint as directed.

C. Where, in the opinion of the Landscape Architect, trees may possibly be defaced, bruised, injured, or otherwise damaged by the Contractor's equipment or by his blasting or other operations, the Landscape Architect may require the Contractor to adequately protect such trees by placing boards, planks, poles or fencing around them. Any trees or landscape feature scarred or damaged by the Contractor's equipment or operations shall be restored as nearly as possible to its original condition at the expense of the Contractor. The Landscape Architect will decide what method of restoration shall be used, and whether damaged trees shall be treated and healed or removed and disposed of.

3.07 CLEARING AND GRUBBING:

A. The Contractor shall clear and grub only on the Owner's land or the Owner's easements, and only the area required for construction operations, as approved by the Landscape Architect.

3.08 DISCHARGE OF DEWATERING OPERATIONS:

A. Any water that is pumped and discharged from the excavation as part of the Contractor's water handling shall be filtered by an approved method prior to its discharge into a receiving water or drainage system.

B. Under no circumstances shall the Contractor discharge water to the areas designated as wetlands. When constructing in a wetlands area, the Contractor shall discharge water from dewatering operations directly to the nearest drainage system, stream, or waterway after filtering by an approved method.

C. The pumped water shall be filtered through filter fabric and baled straw, a vegetative filter strip or a vegetated channel to trap sediment occurring as a result of the construction operations. The vegetated channel shall be constructed such that the discharge flow rate shall not exceed a velocity of more than 1 foot per second. Accumulated sediment shall be cleared from the channel periodically.

3.09 DUST CONTROL:

A. During the progress of the work, the Contractor shall conduct his operations and maintain the area of his activities, including sweeping and sprinkling of streets as necessary, to minimize creation and dispersion of dust.

B. Calcium Chloride shall not be used for dust control within wetland resource areas, buffer zones, drainage basins, or in the vicinity of any source of potable water.

END OF SECTION

SECTION 01 57 16
RODENT CONTROL

PART 1 - GENERAL

1.01 GENERAL REQUIREMENTS:

A. The conditions and general requirements of the Contract, Division 0 and applicable parts of Division 1, apply to the work under this Section.

1.02 WORK INCLUDED:

A. This section specifies requirements for rodent control activities by the Contractor at all work and laydown (or staging) areas in connection with this Contract.

B. The Contractor shall retain the services of a licensed rodent exterminator to conduct an inspection of the work and laydown areas and report on the presence of rodents and take any necessary measures to eliminate existing rodent populations prior to start of work. All rodent control to be in place and approved prior to any equipment delivery or demolition.

1.03 SUBMITTALS:

In accordance with requirements of general specifications, submit the following:

A. Within ten days after Notice to Proceed, submit to the Landscape Architect and Owner's Representative a written description of rodent control measures to be used and the areas to be included in the program.

B. Provide the name and background of the licensed rodent exterminator retained to provide any necessary rodent eradication measures prior to start of work. The licensed rodent exterminator must be approved by City Director of Inspectional Services.

PART 2 - MATERIALS

2.01 CONTAINERS:

A. Use metal or heavy-duty plastic refuse containers with tight-fitting lids for disposal of all garbage, or trash associated with food. These containers shall not have openings that allow access by rodents.

PART 3 - EXECUTION

3.01 WORK AND LAYDOWN AREAS WITHIN THE CONTRACT AREA:

A. Before mobilization begins, obtain written verification from the rodent exterminator that rodent populations have been effectively controlled in areas to be occupied.

B. Following site clearing and before demolition, excavation, or construction, inspect work and laydown areas and remove all remaining trash, debris, and weeds.

C. Maintain work and laydown areas free of trash, garbage, weeds, and debris. Provide and enforce proper use of refuse containers to ensure that rodents and other pests are not harbored or attracted.

D. Designate specific locations as lunch and coffee break areas to prevent random disposal of garbage and trash. Keep those areas free of litter and garbage, and provide refuse containers as described in 2.01 of this section. Keep refuse containers upright with their lids shut tight.

E. Have all refuse containers emptied daily to maintain site sanitation.

F. Notify the Owner's Representative within 24 hours whenever rodents (rats or mice) or signs of rodent activity (burrows or droppings) are observed in work or laydown areas. Take appropriate action to locate and control the rodents.

3.02 LAYDOWN AREAS OUT THE CONTRACT AREA:

A. Implement pest control at all laydown areas that are not areas of this Contract, but that are used by the Contractor in connection with this Contract. Undertake rodent control at least two weeks prior to use of the area and with tie to ensure that the site is free of rodent populations (rats and mice) prior to site occupancy. Maintain the site free of rodents throughout the duration of its use.

B. Clear laydown areas of trash, debris, and weeds prior to occupancy. Initiate those actions only after rodent populations have been effectively controlled.

C. Maintain laydown areas free of trash, garbage, weeds, and debris. Provide and enforce proper use of refuse containers to ensure that rodents and other pests are not harbored or attracted.

D. Dispose of all garbage or trash associated with food in refuse containers with tight-fitting lids as described in 2.01 of this Section. Have refuse containers emptied daily to maintain site sanitation.

END OF SECTION

SECTION 01 62 00
SUBSTITUTIONS

PART 1 - GENERAL

1.01 GENERAL

A. Substitutions: Changes in products, materials, equipment, and methods of construction required by the Contract Documents proposed after award of the Contract are considered requests for substitutions. The following are not requests for substitutions:

1. Substitutions requested during the bidding period and accepted by Addendum prior to award of the Contract.
2. Revisions to the Contract Documents requested by the Owner.
3. Specified options included in the Contract Documents.
4. Contractor's compliance with regulations issued by governing authorities.

B. Substitution Request Submittal: The Landscape Architect will consider request for substitution received within 10 days after execution of the Contract, provided that the proposed substitution does not compromise the Contractor's ability to achieve the Substantial and Final Completion dates required in the Contract Documents. The Contractor shall include a minimum of 30 days for the substitution approval process into the project schedule, as well as the potential for the substitution to be rejected with the requirement to provide specified products.

1. Submit three copies of each request for substitution. Submit requests according to procedures required for change-order proposals.
2. Identify the product or method to be replaced in each request. Include related Specification Section and Drawing numbers.
3. Provide documentation showing compliance with the requirements for substitutions and the following information.
    1) Coordination information, including a list of changes needed to other Work that will be necessary to accommodate the substitution.
    2) A comparison of the substitution with the Work specified, including performance, weight, size, durability, and visual effect.
    3) Product data, including Drawings and descriptions of products and installation procedures.
    4) Samples, where applicable or requested.
    5) A statement indicating the effect on the Contractor's Construction Schedule compared to the schedule without approval of the substitution. Indicate the effect of the substitution on Contract Time.
    6) Cost information, including a proposal of the net change, if any in the Contract Sum.
    7) Certification that the substitution conforms to the Contract Documents and is appropriate for the applications indicated.
    8) The Contractor's waiver of rights to additional payment or time that may become necessary because of the failure of the substitution to perform adequately.
4. Landscape Architect's Action: If necessary, the Landscape Architect will request additional information within one week of receipt of a request for substitution. The Landscape Architect will notify the Contractor of acceptance or rejection within two weeks of receipt of the request. Acceptance will be in the form of a change order.

1) Use the product specified if the Landscape Architect cannot make a decision within the time allocated.

PART 2 - PRODUCTS

2.01 GENERAL

A. Conditions: The Landscape Architect will receive and consider a request for substitution when one or more of the following conditions are satisfied. Otherwise, the Landscape Architect will return the requests without action except to record noncompliance with these requirements.

1. Extensive revisions to the Contract Documents are not required.
2. Changes are in keeping with the intent of the Contract Documents.
3. The specified product cannot be provided within the Contract Time. The Landscape Architect will not consider the request if the specified product cannot be provided as a result of failure to pursue the Work promptly.
4. The request is related to an “or-equal” clause.
5. The substitution offers the Owner a substantial advantage, in cost, time, or other considerations, after deduction compensation to the Landscape Architect for redesign and increased cost of other construction.
6. The specified product cannot receive approval by a governing authority, and the substitution can be approved.

B. The Contractor’s submittal and the Landscape Architect’s acceptance of Shop Drawings, Product Data, or Samples for construction not complying with the Contract Documents do not constitute an acceptable request for substitution, nor do they constitute approval.

PART 3 - EXECUTION

(Not Applicable)

END OF SECTION

SECTION 01 74 00
CLEANING UP

PART 1 - GENERAL

1.01 RELATED DOCUMENTS

A. Consult the individual Sections of the specifications for cleaning of Work installed under those Sections.

1.02 CLEANING DURING CONSTRUCTION

A. Conduct cleaning and disposal operations to comply with local ordinances and anti-pollution laws.

1. Do not burn or bury rubbish and waste materials on the site.
2. Do not dispose of volatile wastes such as mineral spirits, oil, or paint thinner in storm or sanitary drains.
3. Do not dispose of wastes into streams or waterways.

B. Wet down dry materials and rubbish to lay dust and prevent blowing dust.

C. Maintain the Site free from accumulations of waste, debris, and rubbish.

D. Provide on-site containers for collection of waste materials and rubbish.

E. At the end of each day, remove and legally dispose waste materials and rubbish from site.

F. Schedule cleaning operations so that dust and other contaminants resulting from cleaning process will not fall on wet, newly painted surfaces.

G. Disposal of materials shall be in compliance with all applicable laws, ordinances, codes, and by-laws.

1.03 FINAL CLEANING

A. Prior to submitting a request to the Landscape Architect to certify Substantial Completion of the Work, the Contractor shall inspect all interior and exterior spaces and verify that all waste materials, rubbish, tools, equipment, machinery, and surplus materials have been removed, and that all sight-exposed surfaces are clean. Leave the Project clean and ready for occupancy.

B. Unless otherwise specified under other sections of the Specifications, the Contractor shall perform final cleaning operations as herein specified prior to final inspection.

C. Cleaning shall include all surfaces, interior and exterior, which the Contractor has had access to, whether new or existing.

D. Employ experienced workmen or professional cleaners for final cleaning.

E. Use only cleaning materials recommended by the manufacturer of the surface to be cleaned.

F. Use cleaning materials which will not create a hazard to health or property and which will not damage surfaces.

G. All broken or defective materials caused by the Contractor's Work shall be replaced at the expense of the Contractor.

H. Remove grease, mastic, adhesive, dust, dirt, stains, labels, fingerprints, and other foreign materials from finished surfaces. This includes cleaning of the Work of all finishing trades where needed, whether or not cleaning by such trades is included in their respective specifications.

I. Repair, patch, and touch up marred surfaces to the specified finish, to match adjacent surfaces.

J. Leave all architectural metals, hardware, and fixtures in undamaged, polished conditions.

K. Broom clean exposed concrete surfaces and paved surfaces. Rake clean other surfaces of grounds.

PART 2 - PRODUCTS

(Not Applicable)

PART 3 - EXECUTION

(Not Applicable)

END OF SECTION

SECTION 01 77 00
PROJECT CLOSEOUT

PART 1 - GENERAL

1.01 RELATED DOCUMENTS

A. Consult the individual sections of the specifications for specific items required under those sections.

1.02 PERMITS

A. The Contractor shall coordinate the efforts of all Subcontractors and obtain any final permits that may be required.

1.03 SUBSTANTIAL COMPLETION

A. Prior to requesting Substantial Completion the Contractor shall make a thorough inspection of the Work. During this inspection the Contractor shall prepare a comprehensive list of all items remaining to be completed or corrected. This list shall include all remaining Contractor and Subcontractor items to be provided under the Contract Documents.

B. Upon completion of the items noted on the Contractor's list the Contractor shall notify the Landscape Architect that the Work is Substantially Complete. The Landscape Architect shall then conduct a similar thorough inspection. If the Landscape Architect agrees that the Work is Substantially Complete, the Landscape Architect will promptly make a thorough inspection and prepare a punch list, setting forth in accurate detail any items on the Contractor's list and additional items that are not acceptable or incomplete. The Contractor shall coordinate all Subcontractors to achieve prompt completion of the punch list.

C. The Contractor shall not be relieved of the responsibility to provide Contract items left off of the Landscape Architect's punch list.

D. If the Landscape Architect determines that the Work is not Substantially Complete, the Landscape Architect shall inform the Contractor of those items that must be completed before the Landscape Architect will prepare a punch list. Upon completion of those items, the Contractor shall again request the Landscape Architect to prepare a punch list.

E. When the punch list has been prepared, the Landscape Architect will arrange a meeting with the Contractor and Subcontractors to identify and explain all punch list items and answer questions on work which must be done before final acceptance.

F. The Landscape Architect may revise the punch list, from time to time, to ensure that all items of Work are properly completed.

1.04 AS-BUILT DRAWINGS

A. Consult the individual sections of the Specifications for the specific requirements of those sections. In cases of inconsistency the more stringent requirement, as directed by the Landscape Architect, shall be required.

B. Prior to final payment and completion, the Contractor shall provide all As Built Drawings.

1.05 OPERATING AND MAINTENANCE INSTRUCTIONS

A. Consult the individual sections of the specifications for the specific requirements for those sections and for further details and descriptions of the requirements

B. Prior to final payment and completion, the Contractor shall provide all Operating Manuals and Maintenance Instructions as required by the Contract Documents. As a minimum, operating

and maintenance manuals will be provided for artificial turf surface and for all other components and systems as specified.

C. Operating Instructions and Manuals

1. Subcontractors, installers, and suppliers shall furnish to the Contractor two sets of operating and maintenance instructions of all mechanical, electrical, and manually operated equipment furnished and installed by them. Mechanical and electrical subcontractors shall furnish instructions as specified in their respective sections.

2. The Contractor shall collect all of the above instructions, bind them into two complete sets, and submit them to the Landscape Architect who will deliver them to the Owner.

3. Submission of operating and maintenance instructions shall be a condition precedent to final payment.

D. Instruction of Owner’s Personnel

1. Where specified in the individual sections of the specifications, the Contractor and Subcontractor shall instruct the Owner's personnel at the site, in the use and maintenance of equipment installed under the Contract.

2. Submission to the Landscape Architect of a certificate of compliance to this requirement, signed by the Contractor and the Owner's Representative, shall be a condition precedent to final payment.

1.06 FINAL COMPLETION

A. FULL RELEASE OF RETAINAGE

1. Upon completion of all work, and after receipt of all appropriate marked up As Built Drawings, Operating Manuals, Warranties, Guarantees, and Spare Parts required by the Contract Documents, the Landscape Architect shall prepare the Certificate of Final Completion.

2. The Contractor’s signature on this Certificate shall be notarized.

3. The Contractor shall provide a final Application for Payment to complement the close-out process.

B. PARTIAL RELEASE OF RETAINAGE

1. If within 60 days after Substantial Completion, any of the items on the Landscape Architect’s punch list are not complete or if the Contractor has not provided the appropriate marked up As Built Drawings, Operating Manuals, Warranties, Guarantees, or Spare Parts the Landscape Architect shall assign a monetary value for each incomplete item and the Landscape Architect shall prepare a Certificate for Partial Release of Retainage.

2. If the Landscape Architect is required to prepare a Certificate for Partial Release of Retainage, the Contractor shall still complete all remaining Work.

3. The Contractor’s signature on this Certificate shall be notarized.

4. The Contractor may make a request for additional releases of retainage when portions of the Work listed on the Landscape Architect's punch list have been satisfactorily completed. Each request shall be accompanied by a new application for payment and a new signed and notarized Certificate for Partial Release of Retainage.

5. Upon completion of all remaining items, the Final Release of Retainage shall be processed in accordance with paragraph A above.

PART 2 - PRODUCTS

(Not Applicable)

PART 3 - EXECUTION

(Not Applicable)

END OF SECTION

SECTION 02 41 13
SITE PREPARATION

PART 1 - GENERAL

1.01 RELATED DOCUMENTS

A. This section is only a portion of the Contract Documents. All of the Contract Documents, including Conditions of the Contract and Division 1 General Requirements, apply to this section.

1.02 DESCRIPTION OF WORK

A. Provide all labor, materials, equipment, and services necessary to complete the work of this Section as specified herein, as shown on the drawings, or both. The Contractor shall coordinate site preparation and demolition activities for each phase of construction.

B. The work of this Section includes, but is not limited to, the following:

1. Staking layout, limits of work and extent of grading
2. Installation and removal of temporary construction fence
3. Tree protection
4. Removing concrete pavement and brick paving
5. Removing fencing
6. Demolition, removal from the site and legal disposal of all existing above grade and subsurface improvements as indicated on the Drawings and as required by the work of this Contract
7. Salvage indicated materials
8. Protection of existing improvements to remain
9. Temporary protection of adjacent public and private property

1.03 RELATED WORK

A. Carefully examine all of the Contract Documents for requirements that affect the work of this Section. Other specification sections that directly relate to the work of this Section include, but are not limited to, the following:

1. Section 015700 - Temporary Controls
2. Section 312000 - Earthwork
3. Section 312500 – Erosion and Sedimentation Controls

1.04 PROJECT CONDITIONS

A. It is hereby understood that the Contractor has carefully examined the site and all conditions affecting work under this Section. No claim for additional cost will be allowed because of lack of full knowledge of existing conditions.

B. Preparation and Workmanship: Except as otherwise specified, site preparation, demolition work and clean up shall be the work of the Contractor. Any item of work not specifically designed to be accomplished by a particular subcontractor shall be considered work of the Contractor.

C. Traffic: Conduct site clearing and demolition operations to ensure minimum interference with roads, streets, walks, and other adjacent occupied or used facilities. Do not close or

obstruct streets, walks or other occupied or used facilities without permission from authorities having jurisdiction.

D. Protection of Existing Improvements: Provide protection necessary to prevent damage to existing buildings, paving, services and all other improvements indicated to remain in place. Locate and identify existing underground utilities within project limit lines. Provide adequate means of protection of all utilities to remain. The Contractor shall contact “Dig-Safe” at 1-888-344-7233 prior to beginning any excavation work. The Contractor shall be solely responsible for locating all underground utilities prior to the commencement of work. Locations of existing utilities on the site plans are not warranted to show all existing utilities under or above ground. Existing utilities indicated on the site plans are shown only for the convenience of the Owner’s representatives.

1. Protect improvements and surfacing on Owner’s property.
2. Restore improvements damaged during construction to their original condition, as acceptable to the Owner and any agencies having jurisdiction.

E. Protection of existing Trees and Vegetation: Protect existing trees and other vegetation indicated to remain in place, against unnecessary cutting, breaking or skinning of roots, skinning or bruising of bark, smothering of trees by stockpiling construction materials or excavated materials within drip line, damaging heat from paving equipment, excess foot or vehicular traffic, or parking of vehicles within tree canopy drip lines. Provide temporary guards, fencing or any other necessary precautions to protect trees and vegetation to remain.

1. Water trees and other vegetation to remain within limits of contract work as required to maintain their health during the course of construction operations.
2. Repair trees and vegetation indicated to remain that are damaged by construction operations, in a manner acceptable to the Landscape Architect. Employ a licensed arborist to repair damage to trees and shrubs.
3. Replace trees and vegetation that cannot be repaired and restored to full-growth status, as determined by a licensed arborist. Trees determined to be removed due to damage caused by the work of this project shall be removed and replaced at the Contractor’s expense with a quantity of approved tree species that match the total tree caliper surface area of the removed trees as measured 12-inches above original grade. Damage requiring tree removal shall include damage to roots, trunk or branches where protection would have prevented such damage. The extent of damage requiring tree removal shall include any one or more of the following: permanent scaring of tree bark, loss of branches or portions of branches that disfigure the tree character, compaction or material contamination of the root zone.

F. Dust and Pollution Control: Provide dust control for dust generated by the work of this project. Dampen surface as required or use other approved method. Comply with pollution control requirements of the governing authority.

G. Salvageable Improvements: Carefully remove items indicated to be salvaged or reused, and store at the site for future use.

H. Bench Marks: Locate, protect and maintain bench marks, monuments, control points and project engineering reference points.

I. Regulatory controls: All work within this Section must comply with the requirements of all authorities having jurisdiction.

PART 2 - PRODUCTS

2.01 TEMPORARY CONSTRUCTION FENCE

A. Temporary construction fencing shall be 6-foot tall galvanized chain link on galvanized steel pipe frame panels with moveable rubber surface footings and bolted brackets to secure panels together. Existing fencing at the site may be used to secure work areas until such time as it must be replaced without impacting the contract completion dates. At gate locations, lock two panels together with chain and padlock.

PART 3 - PART 3 - EXECUTION

3.01 SITE ENGINEERING /LAYOUT

A. Prior to the start of clearing and excavation operations, lay out and stake the building additions, paved areas, limits of cut and fill and work limit lines for the Landscape Architect's review.

B. Promptly upon completion of layout work, and before any clearing or other construction work is begun, the Contractor shall arrange a conference on the site with the Landscape Architect to inspect and verify the limits of work areas staked out. The limit of cut and fill shall be clearly marked to determine the extents of tree removal required.

3.02 TEMPORARY CONSTRUCTION FENCE

A. Install temporary construction fence and gates to secure the limit of work and materials stored on-site.

B. Move temporary construction fencing as required by substantial completion of the playground and as required to accommodate emergency access requirements and Owner's use.

C. Remove all temporary fencing after acceptance of the work by the Landscape Architect and Owner, and restore landscape areas where temporary fencing prevented proper establishment and maintenance.

3.03 REMOVAL OF TREES AND SHRUBS

A. Remove trees and shrubs as indicated on the Drawings and as required to construct the work of this project.

B. Prior to starting any construction work, erect tree protection where shown as detailed on the drawings and as required where directed by the Landscape Architect in the field.

C. Grubbing: Completely remove stumps and roots of vegetation indicated to be removed.

D. All materials from clearing operations shall be removed from the site prior to or by the end of the clearing operations. On-site disposal will not be allowed.

E. Fill holes, depressions caused by clearing and grubbing operations with fill material and placement conforming to Section 312000 – EARTHWORK as specified for the proposed improvements. Place fill in horizontal layers, 6 inches in loose depth, and compact to the specified density.

F. Without exception, any area cleared for any reason by the Contractor, inside or outside the Limit of Work Line and not otherwise developed shall be loamed and seeded at no additional cost to the Owner.

G. Tree clearing shall include as many separate mobilizations as required by the Contractor's sequence of operations due to the phased nature of the project. A selective clearing

operation shall be performed by the Contractor after rough grading has been completed, to remove trees, stumps and vegetation at the limits of cuts and fills as directed by the Landscape Architect in the field.

3.04 PROTECTION AND PRUNING OF EXISTING PLANT MATERIAL TO REMAIN

A. Within the limit of work lines protect all plant materials to remain as indicated on the Drawings. No such plant materials shall be used as guys or other fastenings.

B. The Contractor shall not cause any damage to trees to remain. If in order to perform excavation work, it becomes necessary to cut roots of plants to be saved, such roots shall be neatly cut after consulting with an Arborist and notifying the Landscape Architect.

C. Roots that cannot be avoided during construction shall be carefully and cleanly cut or shaved. Only hand methods for grubbing roots will be accepted inside drip lines of trees to be left standing. All root pruning and shaving must be completed by the certified arborist under the supervision of the Owner's Representative. Root pruning shall include application of root treatment or fertilizer as required. In order to minimize impact to roots, arborist shall uncover roots with air spade.

1. The work shall consist of all labor, materials, equipment and transportation required to complete the airspading a required. The following equipment shall be available onsite for use: supersonic air tools such as the "airspade" for use on designated trees with root conflicts as designated.
2. The Contractor shall engage a board certified arborist based within 20 miles of the project site and with a minimum of five (5) years of experience including experience with supersonic air tools such as the "airspade" for the project.
3. Tree pruning and airspading shall be performed only by certified arborists or arborist trainees who, through related training or on-the-job experience, or both, are familiar with the practices and hazards of arboriculture and the equipment used in such operations and will conduct a visual assessment of each tree for the need for airspading and/or tree root pruning.
4. Existing soil volume shall be aerated and organic matter shall be integrated into the root zone, using the air excavation tool (airspade). The entire root zone shall then be covered with 2-3" of composted hardwood chip mulch (NOT bark mulch).

D. Exposed tree roots shall be covered with damp burlap or similar protective covering to keep roots from drying out until trench is backfilled and roots are covered with soil.

3.05 ABOVE AND BELOW GRADE IMPROVEMENTS

A. Remove and legally dispose of all existing above and below grade improvements necessary to permit construction of the Project including but not limited to pipes, tanks, concrete slabs, castings, curbing, walls, fencing, signage and any and all other improvements inside or outside the contract limits except items indicated on the Site Preparation Plan to be preserved and protected or removed and salvaged. Remove walls and other obstructions to a depth of at least 2 feet below finished grades and as required to construct the subsurface improvements of this project.

B. Abandonment, relocation, partial removal or complete removal of certain existing underground and above ground utilities including, but not limited to pipes, tanks, castings, conduits, electrical wiring and poles shall be performed as indicated on the Drawings.

3.06 DISPOSAL OF WASTE MATERIALS

A. Removal from Owner's property: Remove all waste materials from Owner's property in timely and responsible manner and legally dispose of off-site. Accumulation is not permitted. Maintain disposal routes clear, clean and free of debris. Dumping and / or

burning of material on site will not be permitted.

3.07 SALVAGE ITEMS

A. Salvage and store on site the following items.

1. Granite benches (4) at building entrance and associated brick paving
2. Buddy bench (1) at tot-lot
3. All trash and recycling receptacles (all) within the limit of work
4. Tot Lot Play Equipment: Climber, Saddle Spinner, Wobble Pod

3.08 CLEAN UP

A. Keep pavements and areas adjacent to and leading from the site, clean and free of mud, dirt and debris.

B. At completion of the work of this Section, remove materials generated by site clearing. Do not spill or disperse debris on the site. Leave the site in a safe and clean condition acceptable to the Landscape Architect.

END OF SECTION

SECTION 03 30 00
CAST-IN-PLACE CONCRETE

PART 1 - GENERAL

1.01 GENERAL REQUIREMENTS

A. The General provisions of the Contract, including General and Supplementary Conditions and Division 1, General Requirements, apply to the work specified in this Section.

B. Carefully review and examine all other Contract Documents for requirements therein affecting the work of this Section. Furthermore, coordinate and sequence the work of this Section with all other trades affected.

1.02 SCOPE OF WORK

A. The work in this Section includes the cast-in-place concrete work as shown on the Contract Drawings and specified herein, including, but not limited to, the following:

1. Furnishing, placing, finishing, curing and protection of all plain and reinforced concrete footings above and below grade.
2. Furnishing, placing, finishing, curing and protection of all fiber reinforced concrete at sloping play mounds.
3. Furnishing and erection of formwork, and removal of same.
4. Furnishing and placing of reinforcing steel and related positioning and securing of all embedded accessories.
5. Furnishing and installation of admixtures, concrete surface conditioners, and similar items in conjunction with concrete work.
6. Furnishing and installation of approved non-shrink cement grout under base and leveling plates.
7. Installation of items furnished by other Sections such as anchors, bolts, plates and embedded items required to be cast into concrete.
8. Make provisions in forms for proper location and installation of pipe sleeves, duct openings, keys, chases and electric boxes, coordinate locations with other trades.
9. Accessories as needed for a complete installation

B. Intent of Work

1. Except as specified otherwise herein, concrete shall be batched, mixed, placed, tested and cured in accordance with the American Concrete Institute's "Specifications for Structural Concrete for Buildings" ACI 301.
2. Subcontractor shall schedule his Work and notify all trades in ample time so that provisions for their Work can be made without delaying the progress of the Project.
3. It is the intention of the Drawings and Specifications to produce concrete which will present an acceptable finished appearance. Imperfections of material or Workmanship shall be corrected as directed by the Landscape Architect's direction, at no additional cost to the Owner.
4. All of the Work that is to be inserted in the forms for attachment of other work is not described in detail. Sub-Contractor shall carefully examine all drawings and other Sections of these specifications for the extent and detail of all such work and coordinate this work with other trades.
5. The Contractor shall be responsible to ensure that all concrete surfaces are completely free of any conditions which will adversely affect its finished appearance or the

application of a specified finish.

6. Failure to comply with these requirements will require removal of sufficiently large Section of the Work, as determined by the Landscape Architect, in order to properly integrate the Section to be replaced with the architectural and structural requirements of the total project. All such removal and replacement shall be made at the expense of the Subcontract at no additional cost to the Owner.

1.03 RELATED REQUIREMENTS

A. The Conditions of the Contract and General Requirements of the Project Manual, including the CM's Scoping documents apply to this subcontractor, material suppliers and all other persons furnishing labor and materials under this Section. The General Conditions, CM's Supplementary Conditions, CM's Scoping documents and applicable parts of Division 01 are included as part of this Section.

B. Carefully examine all of the Contract Documents for requirements which affect the Work of this Section.

C. Work described in other Sections which contain requirements applicable to the work of this Section, or with which this subcontractor must coordinate the Work of this Section include, but are not limited to the following:

1. Section 116800 – Playground Equipment
2. Section 312000 – Earthwork
3. Section 321313 – Concrete Pavements
4. Section 323000 – Site Improvements
5. Section 323100 – Fencing
6. Section 323300 – Site Furnishings

1.04 REFERENCE STANDARDS

A. Except as modified by the requirements specified herein and/or the details on the Drawings, all Work included in this Section shall conform to the applicable provisions of the following codes, standards and references as well as those specified in Section 01 42 00 - References and in the latest edition of the Massachusetts State Building Code (MSBC):

1. ASTM International; www.astm.org
   a. A185/A185M-07 – Standard Specification for Steel Welded Wire Reinforcement, Plain, for Concrete
   b. A497/A497M-07 – Standard Specification for Steel Welded Wire Reinforcement, Deformed, for Concrete
   c. A615/A615M-07 – Standard Specification for Deformed and Plain Billet-steel Bars for Concrete Reinforcement
   d. A706/A706M-06a – Standard Specification for Low-Alloy Steel Deformed and Plain Bars for Concrete Reinforcement
   e. C33-03 – Standard Specifications for Concrete Aggregates
   f. C94/C94M-06 – Standard Specification for Ready Mix Concrete
   g. C150-05 – Standard Specification for Portland Cement
   h. C171-92 – Standard Specification for Sheet Materials for Curing Concrete
   i. C260-06 – Standard Specification for Air-entraining Admixtures for Concrete

j. C309-93 – Standard Specification for Liquid Membrane-forming Compounds for Curing Concrete

k. C494/C494M-05a – Standard Specification for Chemical Admixtures for Concrete

l. C618-05 – Standard Specification for Coal Fly Ash and Raw or Calcined Natural Pozzolan for Use in Concrete

m. C685/C685M-01 – Standard Specification for Concrete Made by Volumetric Batching and Continuous Mixing

n. C989/C989M-12a – Standard Specification for Slag Cement for Use in Concrete and Mortars

o. C1017/C1017M-03 – Standard Specification for Chemical Admixture for Use in Producing Flowing Concrete

2. ACI. American Concrete Institute; www.concrete.org

a. ACI 117-90 (Reapproved 2002) – Specifications for Tolerances of Concrete Construction and Materials

b. ACI 121R-04 – Quality Management System for Concrete Construction

c. ACI 207.1R-96 – Mass Concrete

d. ACI 211.5R-01 – Guide for Submittal of Concrete Proportions

e. ACI 212.3R-04 – Chemical Admixtures for Concrete

f. ACI 212.4R-04 – Guide for the Use of High-Range Water-Reducing Admixtures (Superplasticizers) in Concrete

g. ACI 213R-03 – Guide for Structural Lightweight Aggregate Concrete

h. ACI 224R-01 – Control of Cracking in Concrete Structures

i. ACI 224.3R-95 (Reapproved 2001) – Joints in Concrete Construction

j. ACI 233R-03 – Slag Cement in Concrete and Mortar

k. ACI 302.1R-04 – Guide for Concrete Floor and Slab Construction

l. ACI 303R-04 – Guide to Cast-In-Place Architectural Concrete Practice

m. ACI 303.1-97 – Standard Specification for Cast-In-Place Architectural Concrete

n. ACI 304R-00 – Guide for Measuring, Mixing, Transporting and Placing Concrete

o. ACI 304.2R-96 – Placing Concrete by Pumping Methods

p. ACI 304.5R-91 (Reapproved 1997) – Batching, Mixing, and Job Control of Lightweight Concrete

q. ACI 305R-88 (Reapproved 2002) – Hot Weather Concreting

r. ACI 306R-88 (Reapproved 2002) – Cold Weather Concreting

s. ACI 308R-01 – Standard Practice for Curing Concrete

t. ACI 309R-96 – Guide for Consolidation of Concrete

u. ACI 309.3R-92 (Reapproved 1997) – Guide to Consolidation of Concrete in Congested Areas

v. ACI 315 – ACI Detailing Manual – 2004

w. ACI 347-04 – Guide to Formwork for Concrete

x. ACI 351.1R-99 – Grouting between Foundations and Bases for Support of

Equipment and Machinery

y. ACI 355.2-04 – Evaluating the Performance of Post-Installed Mechanical Anchors in Concrete

z. ACI 503R-93 (Reapproved 1998) – Use of Epoxy Compounds with Concrete

aa. ACI 503.4-92 (Reapproved 2003) – Standard Specification for Repairing Concrete with Epoxy Mortars

bb. ACI 504R-90 (Reapproved 1997) – Guide to Sealing Joints in Concrete Structures

cc. ACI 544.3R-93 (Reapproved 1998) – Guide for Specifying, Proportioning, Mixing, Placing, and Finishing Steel Fiber Reinforced Concrete

dd. ACI 546R-04 – Concrete Repair Guide

3. ANSI – American National Standards Institute
   a. ANSI/ASCE 9-91 – Standard Practice for the Construction and Inspection of Composite Slabs
4. AWS – American Welding Society
   a. AWS D1.1-04 – Structural Welding Code-Steel
   b. AWS D1.4-98 – Structural Welding Code-Reinforcing Steel
5. CRSI (MSP) – Manual of Standard Practice (28th edition)
6. MSBC – The latest currently enforced edition of the Massachusetts State Building Code
7. IBC – International Building Code, 2009, as amended by the MSBC.
8. ADA – Americans with Disabilities Act 2010.
9. MAAB – Massachusetts Architectural Access Board.

1.05 SUBMITTALS

A. Refer to Section 01 33 00 – SUBMITTAL PROCEDURES for submittal provisions and procedures.

B. Concrete Curing and Protection:
   1. Submit to the Landscape Architect in accordance with the requirements of the Contract Documents, detailed methods proposed for use for curing and protection prior to commencement of concrete work, including:
      a. Cold and Hot Weather protection plan
      b. Curing protection plan for footings, walls, slabs-on-grade, curbs
   2. Concrete Mix Design: Submit proposed mix designs for each class of concrete indicated in section 2.02. Include the following:
   3. Copies of mix designs: Mix designs shall be prepared by an independent testing laboratory.
   4. The mix design submittal shall list:
      a. All materials, admixtures and their proportions.
      b. Water and cement content, water cementitious material ratio, slump and combined aggregate gradation (percent retained on every sieve size).
      c. Compressive Strength: Documentation of how the strength was determined.

d. Information on concrete materials as per paragraph 4.1.2.3 of ACI 301.

e. Whether mix is appropriate for pumping.

f. Indicate where each mix will be used.

5. This submittal shall include the results of all testing performed to qualify the materials and to establish the mix design. Include all calculations and tests required by ACI 318 Section 5.3.

a. Test results of total chloride in content.

b. Where shrinkage limit is specified, submit shrinkage test results.

c. For lightweight aggregate used, submit test results per ASTM C330-03.

d. For normal weight aggregate, submit test results per ASTM C33-05.

C. Product Data:

1. Submit product data for the following products and those requested by the Landscape Architect showing compliance with project specifications, manufacturer's recommendations, as well as known limitations. Provide certification that the following materials conform to the standards referenced in this section including, but not limited to:

a. Reinforcement

b. Form work and accessories

c. Admixtures

d. Cementitious materials used in mix design

e. Patching compounds

f. Joint systems

g. Curing materials

h. Non-shrink grout

i. Certifications: Submit certification by the manufacturers that each admixture conforms to requirements specified in this section and that the admixtures are compatible with one another.

D. Upon completion of the concrete Work, deliver the records of concrete placement and the concrete batch tickets to the Landscape Architect.

E. Warranty:

1. Provide copies of manufacturers' actual warranties for all materials to be furnished under this Section, clearly defining all terms, conditions and time periods for the coverage thereof.

a. Provide 10-year warranty for concrete mitigation admixture as specified in Article 1.06 below.

F. Samples:

1. Submit samples and/or descriptive literature of materials, products and methods as noted herein and as otherwise requested by the Landscape Architect.

2. Submit three representative samples of each concrete constituent including, but not limited to:

a. Admixtures and topical treatments

b. Accessories for reinforcement

c. Form release agent

d. Pre-molded joint filler

e. Non-shrink cement grout

f. Control joint breakaways

1.06 QUALITY ASSURANCE

A. Qualification of Workmen:

1. Provide one or more persons who shall be present at all times during the execution of this portion of the Work and who shall be thoroughly trained and experienced in the types of concrete specified and who shall direct all work performed under this Section.

2. The individual directing this work shall have at least five years of foreman experience with 'As-cast' Architectural concrete.

3. For finishing of exposed surfaces of the exposed concrete, use only thoroughly trained and experienced journeymen concrete finishers.

4. Product(s) Technical Representative: Provide services of a qualified technical representative approved by reinforcement manufacturer to instruct concrete supplier in proper batching and mixing procedures.

B. Mock-ups per Section 01 43 39 – MOCK-UPS, and as follows: Architectural Concrete exposed-to-view

1. Provide full scale three-dimensional assemblies utilizing final specified materials and final production techniques, constructed to be fully tested to ensure that the systems meet the performance requirements of the Specification by application of the maximum applied loads, in-situ conditions and structural movements.

2. Build Mock-up in location and size acceptable to Landscape Architect of type specified.

a. Notify design professional seven days in advance of time when mock- up will be installed for approval viewing.

b. Demonstrate the anticipated range of materials, workmanship and finish expected.

c. Obtain approval in writing before commencing work. Mock-up may not be included as a part of the finished project.

d. Protect the approved mock-up during construction period as it will be used to comparatively judge the finished installation.

1.07 TESTING & INSPECTION

A. Inspection, Testing and Quality Control:

B. Inspection and Testing of cast-in-place concrete work shall be performed by an approved independent testing agency. All costs for inspection and testing shall be borne by the Contractor.

C. The materials and workmanship to be furnished under this Section shall be subject to inspection in the shop and field by the Landscape Architect. Such inspection shall not relieve the Contractor of his requirements to furnish materials and workmanship in accordance with the requirements of the Contract Documents.

1.08 DELIVERY, STORAGE, AND HANDLING

A. Comply with ACI, concrete plant's instructions and recommendations, and as follows:

1. Handle and store materials separately in such manner as to prevent intrusion of foreign matter, segregation, or deterioration.

2. Do not use frozen materials or those containing ice.
3. Store bags of concrete or grout indoors.
4. Remove improper and rejected materials immediately from point of use.
5. Cover materials, including steel reinforcement and accessories, during construction period.
6. Stockpile concrete constituents properly to assure uniformity throughout project.

PART 2 - PRODUCTS

2.01 CONCRETE CONSTITUENTS

A. Cement: Shall be American-made Portland Cement; and conform to chemical and physical requirements of ASTM C150 for Type I for exposed concrete and Type II, low alkali, standard gray color for all other work.

B. Cast-in-place concrete for sloped rubber play mounds shall be fiber-reinforced concrete.

C. Normal Weight Fine Aggregate: Shall be washed, inert, natural sand conforming to ASTM C33.

D. Normal Weight Coarse Aggregate: Shall be well-graded crushed stone or washed gravel conforming to ASTM C33.

E. Light Weight Fine and Coarse Aggregate: Shall conform to ASTM C330.

F. Water: Shall be from approved source, potable, clean and free from oils, acids, alkali, organic matter and other deleterious material.

G. Admixtures:

1. Normal Range Water-reducing Agent: ASTM C494, Type A. Water-reducing agent shall be by same manufacturer as air-entraining agent.
    a. Acceptable Products and Manufacturers:
        1) "Eucon WR-91" by Euclid Chemical Company
        2) "ZYLA610" by W. R. Grace & Co.
        3) “Pozzolith” Series by BASF Corporation
2. Mid-Range Water Reducing Agent: ASTM C494, Type A Water-reducing agent shall be by same manufacturer as air-entraining agent.
3. High Range Water Reducing Agent / Retarder: ASTM C494, Type F or Type G Water-reducing agent shall be by same manufacturer as air-entraining agent.
4. Air-entraining agent: ASTM C260. In no instance shall air percent content exceed five percent (5%) by volume.

2.02 CONCRETE MIXTURES

A. Footings: Proportion normal weight concrete mixture as follows:

1. Minimum Compressive Strength: 5000 PSI at 28 days.
2. Maximum water – cementitious material ratio: 0.45.
3. Slump Limit: 4-in., plus or minus 2-in.
4. Air Content: 6 percent, plus or minus 1 1/2 percent at point of delivery for 3/4-in. nominal maximum aggregate size.

B. Water reducing and air-entraining agents shall be used in all concrete. Total entrapped air

plus entrained air in freshly mixed concrete shall be as indicated above with required strengths maintained.

1. Use a high range water reducing agent for all concrete for slabs-on-grade and slabs-on-metal deck.
2. Use a mid-range water reducing agent in all pumped concrete with a water/cement ratio greater than 0.40.
3. Use a high range water reducing agent in concrete with a water cement ratio of 0.40 or less.

C. Calculated Equilibrium Unit Weight of dry, normal weight concrete shall be 147 pcf, plus or minus 3 lbs. / cu. ft. as determined by ASTM C 567.

D. Calculated Equilibrium Unit Weight of dry, light weight concrete shall be 113 pcf, plus or minus 3 lbs. / cu. ft. as determined by ASTM C 567.

E. In lieu of preparing mix design in laboratory, a production mix may be proposed provided a record of at least 30 consecutive strength tests is submitted to the Landscape Architect for review. Tests shall be from similar mix used in last 12 months and average compressive strength shall be consistent with standard deviation of compressive strengths permitted in ACI 318, Chapter 4, paragraph 4.3, "Proportioning on the basis of field experience".

F. Any deviation from approved mix design, which the Contractor deems desirable under certain project conditions, will not be allowed without examination and written review by the Landscape Architect.

1. Costs of additional testing by the Testing Agency shall be paid for by the Contractor, at no additional cost to the Owner.

2.03 FORM MATERIALS

A. Exposed Concrete Surfaces: Shall conform to ACI-301, Chapter 13.

B. Forms for concrete flat surfaces exposed to view in finished work shall be new Class I High Density Overlay Plyform, exterior grade, not less than five ply nor less than 5/8 in. thick conforming to U.S. Product Standard P-1-66.

1. All form joints shall be sealed with approved non-staining sealant to be watertight.

C. Concrete Surfaces Not Exposed to View: Forms for concrete surfaces not exposed to view in finished work shall be made of wood, metal or other materials subject to review of the Landscape Architect, and shall conform to ACI 301, Chapters Four and Ten.

D. Form Release Agent: Shall be of a non-staining and non-emulsifiable type, or equal approved by the Landscape Architect. Form release agent shall not impart any stain to concrete nor interference with adherence of any finish material to be applied to any concrete surface.

2.04 REINFORCEMENT AND ACCESSORIES

A. Recycled Content of Steel: Use maximum available percentage of recycled steel. Reinforcing steel incorporated into the work shall contain not less than 95 percent of recycled scrap steel.

B. Reinforcing Steel Bars: Shall be newly rolled billet steel conforming to ASTM A615 (Grade 60 unless noted). Bars shall be bent cold. Reinforcing bars being welded shall conform to ASTM A 706, Grade 60.

C. Welded Wire Fabric ASTM A 185: All welded wire fabric shall be supplied in sheets and is to be used in slabs on grade and on deck as noted. No fiber mesh substitutes will be permitted.

D. Fiber reinforcement: ASTM C1116, polypropylene monofilament fibers ¾” long, chemically inert and completely alkali resistant. Fiber reinforcement shall be FORTA® ECONO-MONO® as produced by FORTA Corporation, 100 FORTA Drive, Grove City, PA 16127,. (800) 245-0306 www.forta-ferro.com

E. Reinforcement Accessories: Shall conform to Product Standard PS7-766, National Bureau of Standards, Department of Commerce, Class C. Reinforcement accessories shall include spacers, chairs, ties, slab bolsters, slips, chair bars, and other devices for reinforcement.

1. Manufacturer: Subject to compliance with requirements, provide products by one of the following:

a. Hohmann & Bernard, Inc.

b. Superior Concrete Accessories, Inc.

c. Dayton Sure-Grip and Shore Co.

d. R.K.L. Building Specialties Co., Inc.

2.05 MISCELLANEOUS MATERIALS

A. Curing Mediums:

1. Absorptive Cover: Burlap cloth made from jute or Kenaf, weighing approximately nine ounces per square yard complying with AASHTO M182, Class 2.

2. Moisture Retaining Cover: One of the following complying with ASTM C171:

a. Waterproof paper,

b. Polyethylene film,

c. Polyethylene-coated burlap.

3. Non-shrink Cement Grout: Shall be ready-to-use non-metallic aggregate product requiring only addition of water at job site. Grout shall be easily workable and shall have no drying shrinkage at any age. Compressive strength of grout (2 x 2 in. cubes) shall not be less than 5000 psi at seven days and 7500 psi at 28 days.

4. Manufacturer List. Subject to compliance with requirements, provide products by one of the following:

a. W. R. Grace & Co

b. Sonneborn Building Products, Inc. / BASF

c. Sakrete Company

B. Threaded Inserts and Dowels: Shall be structural concrete insert of type shown on Drawings. Galvanize all components in accordance with ASTM A 153, unless indicated to be stainless steel.

1. Manufacturer List. Subject to compliance with requirements, provide products by one of the following:

a. Hohmann and Barnard, Inc.

b. Richmond Screw Anchor Co.

c. Superior Concrete Accessories Inc.

C. Preformed Joints: Install as per the manufacturer's instruction the following material to form the control joint at all slabs on grade.

1. Acceptable Products and Manufacturers:

a. Keyed Kold Joint by The Burke Co., San Mateo, California.

b. Kold Seal Zipper Strip by Vinylex Corporation, Knoxville, Tennessee

c. Preformed Control Joints by W. R. Meadows.

PART 3 - EXECUTION

3.01 EXAMINATION

A. Examination and Acceptance of Conditions as follows:

1. Carefully examine installation areas with Installer/Applicator present, for compliance with requirements affecting Work performance.

a. Verify that field measurements, substrates, structural support, utility connections, tolerances, levelness, plumbness, humidity, moisture content level, cleanliness and other conditions are as per the requirements of each manufacturer, and ready to receive Work.

b. Proceed with installation only after unsatisfactory conditions have been corrected.

3.02 ERECTION OF FORMWORK

A. Use forms for all concrete, including footings, except as otherwise permitted in writing by Landscape Architect. Design and construct concrete forms to withstand all forces, including construction live loads imposed upon them during placing and curing of concrete, and with adequate bracing to hold them within specified tolerances for lines and grades shown on Drawings as specified under ACI 347.

B. Before reinforcement is placed on or against formwork, formed surfaces coming in contact with fresh concrete shall be cleaned and then treated with approved form release agent.

C. Before form materials can be re-used, surfaces that will be in contact with freshly cast concrete shall be thoroughly cleaned, damaged areas repaired and projecting nails withdrawn. Re-use of form material shall be subject to review by the Landscape Architect.

D. Tolerances for formed surfaces: Produce formed concrete work to the dimensions shown on the Drawings within the tolerances given in ACI 347.78, Article 3.31. The tolerances are the maximum allowable dimensional departure from the planes and points established by the Drawings, subject to the maximum rate of change in plane equal to the tolerance dimension and distance first stated in Article 3.3.I for each category of work.

E. Tolerances for Architecturally exposed concrete formed surfaces: Surfaces permanently exposed to view shall be considered “Class A” finish, with no abrupt or gradual surface irregularity in excess of 1/8 inch within a 5 foot measured dimension.

1. Abrupt irregularities are defined to include offsets and fins resulting from displaced, mismatched or misplaced forms, surface defects in form materials, sheathing or liners, and voids within concrete due to improper vibrating.

2. Gradual irregularities are defined to include those resulting from warping, deflection or bending of formwork or similar variations from planeness. Gradual irregularities will be measured with a straightedge for flat surfaces.

3. Rejection of Exposed Formed Concrete: Any Architectural Concrete that does not conform to the requirements of ACI 347, Article 5.2 for appearance and quality or the requirements stated herein, when forms are removed, is subject to rejection by the Landscape Architect. Rejected work shall be removed and replaced at the Contractor's expense.

3.03 PLACING OF REINFORCEMENT

A. Reinforcement shall be placed in accordance with requirements of CRSI (MSP) "Placing Reinforcing Bars" and with further requirements below.

B. Heating, bending, tack welding, curing or substituting reinforcement in field is PROHIBITED, other than as shown on Drawings.

C. Reinforcement shall be continuous through construction joints, unless otherwise indicated on

Drawings.

D. Reinforcement shall be spliced only in accordance with requirements of Contract Documents. Splices of reinforcement at points of maximum stress shall generally be avoided. Welded wire fabric shall lap 6 in. inches or one space, whichever is larger, and shall be wired together.

E. Fiber reinforcing shall be installed per the manufacturer's recommendations and as specified in the contract documents.

3.04 INSTALLATION OF EMBEDDED ITEMS

A. Conform to requirements of ACI 318, Chapter 6, paragraph 6.3, "Conduits and Pipes Embedded in Concrete", and as specified below.

B. Installation of inserts required by other trades, shall be coordinated with, or shall be installed prior to, placing of reinforcing steel. All inserts shall be supplied by respective trades and installed by the Contractor.

3.05 SLAB ON GRADE JOINTS

A. Control joints in the slab on grade shall be made by either of the following methods:

1. Saw Cutting: Saw cutting shall be accomplished using a "Soff-Cutt" saw or approved equal.

a. Saw cutting shall begin immediately after final finishing.

b. Preformed Joints: Install as per the manufacturers instruction material to form the control joint at all slabs on grade.

3.06 MIXING, CONSISTENCY, AND DELIVERY OF CONCRETE

A. Concrete shall be ready-mixed and produced by a plant acceptable to the Landscape Architect and the Testing Agency. Hand or site mixing shall not be done. Constituents, including mixture, shall be batched at the central batch plant. Admixtures shall be premixed in a solution form and dispensed as recommended by the manufacturer.

B. Concrete shall arrive at the job site at a slump of 2 – 3 in., and at the time of deposit shall be as follows:

Portion of Structure	Recommended	
	Slump	Max. Range
Pavements, Slabs on Grade	4 inch	3 - 5 inch
Footings		
Site Concrete and Site Retaining Walls	4 inch	2 - 6 inch
Reinforced Walls	4 inch	2 - 6 inch

C. If a high range water reducing admixture (super-plasticizer) is used, it may be added at the job site after verifying that the delivery slump is 2 to 3 in. The maximum slump, after adding the HRWR admixture, shall be 8 in.

D. For normal weight concrete, water may be added to the concrete at the site only to make up water withheld at the plant. Batching plant shall document on the driver's delivery ticket any water withheld at the plant. When water has not been withheld and slump is too low for proper handling of concrete, use the HRWR admixture to bring slump within specified range.

E. Ready-mix concrete shall be transported to site in watertight agitator or mixer trucks loaded not in excess of rated capacities.

1. Discharge at site shall be within one and one-half hours after cement was first introduced into mix.
2. When air temperature is between 85 to 90 deg. F, discharge at site shall be within 75 minutes and when air temperature is above 90 deg. F, discharge site shall be within 60 minutes.
3. Concrete with a temperature greater than 90 deg. F shall not be placed.
4. Central mixed concrete shall be plant mixed a minimum of five minutes.

D. Re-tempering of concrete that has partially hardened, that is, mixing with or without additional cement, aggregates, or water, will not be permitted.

3.07 PLACING CONCRETE

A. Remove water and foreign matter from forms and excavations. Except in freezing weather or as otherwise directed, thoroughly wet wood forms just prior to placing concrete. Place no concrete on frozen soil, ice or standing water, and provide adequate protection against frost action during freezing weather.

B. Soil bottom for slabs and footings, reinforcing, inserts, and forms shall be reviewed by Landscape Architect before placing concrete.

C. To secure full bond at construction joints, surfaces of concrete already placed, including vertical and inclined surfaces, shall be thoroughly cleaned of foreign materials and laitance, roughened with suitable tools such as chipping hammers or wire brushed, and re-cleaned by stream of water or compressed air.

1. Well before new concrete is deposited, joints shall be saturated with water.
2. After free or glistening water disappears, joints shall be given thorough coating of neat cement slurry mixed to consistency of very heavy paste.
3. Surface shall receive coating of at least 1/8 in. thick; this shall be scrubbed in by means of stiff bristly brushes.
4. New concrete shall be deposited before neat cement dries.

D. Do not place concrete having a slump outside of allowable slump range.

E. Transport concrete from mixer to place of final deposit as rapidly as practical by methods which prevent separation of ingredients and displacement of reinforcement and which void re-handling. Deposit no partially hardened concrete. When concrete is conveyed by chutes, equipment shall be of such size and U- shaped design as to insure continuous flow in chute. Flat (coat) chutes shall not be employed.

F. During and immediately after depositing, concrete shall be thoroughly consolidated by means of internal type mechanical vibrators.

G. Vertical lifts shall not exceed 18 in. Vibrate through successive lifts to avoid pour lines. Vibrate first lift thoroughly until top of lift glistens to avoid stone packets, honeycomb, and segregation.

H. Concrete shall be deposited continuously and in layers of such thickness that no concrete will be deposited on concrete which has hardened sufficiently to cause formation of seams and planes of weakness within section.

1. If section cannot be placed continuously between planned construction joints, as specified, field joint and additional reinforcement shall be introduced so as to preserve structural continuity.
2. Notify Landscape Architect of each such case.

I. Cold Weather Placement – comply with ACI 306.1 and as follows:

1. Protect concrete work from physical damage or reduced strength that could be caused by frost, freezing conditions or low temperatures.
2. Follow ACI cold weather placement procedures when concrete is placed at or below an ambient air temperature of 40 deg F; or, whenever, in the opinion of the National Weather Service five-day weather forecast, the temperatures are likely to be below 40 deg F within 24 hours after placement of concrete. Maintain delivered concrete mixture temperature within the temperature range required by ACI 301.
3. Do not use frozen materials or materials containing ice or snow.
4. Do not place concrete on frozen subgrade or on subgrade containing frozen materials.
5. Do not use calcium chloride, salt or other materials containing antifreeze agents or chemical accelerators unless otherwise specified and approved in mixture designs.

J. Hot Weather Placement – Comply with ACI 305 and as follows:

1. Maintain concrete temperature below 90 degrees Fahrenheit at time of placement. Chilling mixing water or chopped ice may be used to control temperature, provided water equivalent of ice is calculated to total amount of mixing water. Using liquid nitrogen to cool concrete is the Contractor's option.
2. Fog-spray forms, steel reinforcement and subgrade just before placing concrete. Keep subgrade uniformly moist without standing water, soft spots or dry areas.

K. Deposit and consolidate concrete for floors and slabs in a continuous operation, within limits of the construction joints, until placement of a panel or section is complete.

1. Consolidate concrete during placement operations so concrete is thoroughly worked around reinforcement and other embedded items and into corners.
2. Maintain reinforcement in position on chairs during concrete placement.
3. Screed slab surfaces with a straightedge and strike off to correct elevations.
4. Slope surfaces uniformly to drains where required.
5. Begin initial floating using bull floats or derbies to form a uniform and open- textured surface plane, before excess bleed water appears on the surface. Do not further disturb slab surfaces before starting finishing operations.
6. During placement of concrete on slabs-on-deck, do not pile concrete. Place concrete uniformly to prevent excessive deflection of the deck and the beams.

3.08 CURING AND PROTECTION

A. When concrete is placed at or below an ambient air temperature of 40 deg F, or, whenever, in the opinion of the National Weather Service five-day weather forecast, the temperatures are likely to be below 40 deg F within 24 hours after placement of concrete, cold weather concreting procedures, according to ACI 306 and as specified herein, shall be followed.

1. To this end, the entire area affected shall be protected by adequate housing or covering and heating.
2. No salt, chemicals, or other foreign materials shall be used in mix to lower freezing point of concrete.

B. Protect concrete work against injury from heat, cold, and defacement of any nature during construction operations.

C. Concrete shall be treated immediately after concreting or cement finishing is completed, to provide continuous moist curing above 50 deg F for at least six days, regardless of ambient air temperatures, unless noted otherwise.

D. Keep permanent temperature record, showing date and outside temperature for concreting

operations.

1. Thermometer readings shall be taken at start of work in morning, at noon, and again late in afternoon. Locations of concrete placed during such period shall likewise be recorded, in such manner as to show any affect temperatures may have had on construction.
    a. Copies of record shall be distributed daily to the Landscape Architect and the Testing Agency.

E. Protect freshly placed concrete from premature drying and excessive cold or hot temperatures.

1. Start initial curing as soon as free water has disappeared from concrete surface after placing and finishing. Weather permitting, keep continuously moist for not less than 7 days.
2. Begin final curing procedures immediately following initial curing and before concrete has dried. Continue final curing for at least 7 days in accordance with ACI 301 procedures. Avoid rapid drying at end of final curing period.
3. In order to avoid plastic or drying shrinkage cracks during warm, dry or windy weather, ACI 302 and ACI 309 shall be followed using wind breaks and sun shades when recommended. Evaporation retardant shall be as specified in Part 2 above.

F. Curing Methods – Provide moisture cover curing as follows:

1. Cover concrete surfaces with moisture retaining cover for curing concrete, placed in widest practicable width with sides and ends lapped at least 3 inches and sealed by waterproof tape or adhesive. Immediately repair any holes or tears during curing period using cover material and waterproof tape.

3.09 REMOVING FORMWORK

A. The Contractor shall be responsible for proper removal of formwork.

B. Forms shall be removed only after concrete has attained 40 percent of the specified 28 day design strength. Construction loads and lateral loads should be placed without damage to the structure or cause any excessive deflection.

3.10 FIELD QUALITY CONTROL

A. Field Tests and Inspections as follows:

1. Inspection and Testing of cast-in-place concrete work will be carried out by an approved independent Testing Agency and paid for by the Contractor.
2. Materials and workmanship shall be subjected to inspection and testing in mill, shop, and/or field by the Landscape Architect and/or the Testing Agency.
3. Such inspection and testing shall not relieve the Contractor of his responsibility to provide his own inspection, testing and quality control as necessary to furnish materials and workmanship in accordance with requirements of Contract Documents.
4. Contractor shall notify the Landscape Architect and the Testing Agency prior to start of any phase of concrete work so as to afford them reasonable opportunity to inspect work. Such notification shall be made at least 24 hours in advance.
5. Compression tests shall consist of one set of five cylinders for each test made, cured, and tested by the Testing Agency during progress of job as a minimum. One cylinder will be tested at seven days and three cylinders will be tested at 28 days. One cylinder shall be retained to be tested at 56 days if the 28-day results are not acceptable and this cylinder may be discarded if not tested. One set of cylinders shall be taken for every 50-cubic yards of concrete or fraction thereof and furthermore shall be taken from

batch with highest slump.

6. Material and/or workmanship that is rejected by the Landscape Architect and/or the Testing Agency either at the plant or at the job site shall be replaced promptly by the Contractor to the satisfaction of the Landscape Architect at no expense to the Owner.

B. Non-Conforming Work per General and Supplementary Conditions, and as follows: Remove, Repair and Reinstall or Restore in Place damaged items prior to inspection for Substantial Completion.

1. Finish touch-up damaged surfaces.
2. Replace damaged materials or items with new, if repair not acceptable to Landscape Architect.

C. Test and Evaluation Reports - submit to the Landscape Architect:

1. Batching and mixing procedure report.
2. Copies of concrete placement temperature records.

3.11 CORRECTIVE WORK AND CRACK SEALING

A. Provide crack sealing for exposed concrete surfaces that develop cracks beginning at placement and through the one year correction period beginning on the date of Final Completion.

1. Seal material shall be non-staining and resilient, matching the concrete color.
2. Corrective work on defects and crack seal shall be performed subject to review of the Landscape Architect.
3. Corrective work and crack sealing shall include all required labor, materials, and equipment.

3.12 CLEANING AND PROTECTION

A. Concrete surfaces shall be cleaned of all form release agent stains in one complete operation in the manner indicated by the manufacturer and reviewed by the Landscape Architect.

1. Caution to be exercised to avoid staining from work overhead.
2. Concrete cleaning shall commence when concrete is at least 28 days old, unless otherwise directed by Landscape Architect.

B. Protect installed work from construction operations until date of Final Completion or Owner occupancy, whichever occurs first.

END OF SECTION

SECTION 10 14 00
SIGNAGE

PART 1 - GENERAL

1.01 GENERAL REQUIREMENTS:

A. The conditions and general requirements of the Contract, Division 0 and applicable parts of Division 1, apply to the work under this Section.

1.02 DESCRIPTION OF WORK:

A. All signage shall be reviewed by Owner prior to manufacturing.

B. Work Included: Provide labor, materials, mounting requirements, and equipment necessary to complete the work of this section, including but not limited to the following:

1. Temporary Construction Project Information sign: four feet by eight feet by three quarter inch thick panel; 4' x 8' x 3/4" securely mounted to the temporary fence or as required by Owner.
2. Temporary "Pardon Our Appearance" Construction sign: two feet by four feet; 2' x 4' securely mounted to the temporary fence or as required by Owner.
3. Community Preservation Act Funding Dedication Sign: 13" x 10"
4. New Schoolyard Regulations signs (Total of 2): eighteen inch by eighteen inch; 18" x 18"
5. Welcome Sign, ages 2-5, direct bury: Owner purchased and contractor installed.
6. Protect and re-install existing park signs.

C. All signs shall be installed in a location directed by the Owner's Representative.

D. Examine all other Sections of the Specifications and all Drawings for the relationship of the work under this Section and the work of other trades. Cooperate with all trades and all departments of the City of Somerville and coordinate all work under this Section therewith.

1.03 SUBMITTALS:

A. Shop Drawings: Include plans, elevations, or details as needed to define typical components and proof for review of graphics by Owner prior to manufacturing. Show mounting methods, accessories, and installation details for approval by Owner.

1.04 COORDINATION:

A. For signs supported by or anchored to permanent construction, advise installers of anchorage devices about specific requirements for placement of anchorage devices and similar items to be used for attaching signs.

PART 2 - PRODUCTS

2.01 GENERAL:

A. Provide signs that comply with requirements indicated for materials, thicknesses, finishes, colors, designs, shapes, sizes and details of construction as indicated. Produce smooth panel sign surfaces constructed to remain flat under installed conditions within tolerance of plus or minus 1/16 inch measured diagonally.

B. All signs shall be professionally printed. The City will provide the vendor with electronic images of all signage artwork, but it shall be the responsibility of the vendor to convert those images

to the proper electronic format. The Contractor (Vendor) shall provide final proofs of all signs to the Owner and Owner's Representative for approval before manufacture.

C. Painting / Finishes: All Permanent signs, poles, and hardware including nuts, bolts, and welds shall be painted a dark Hunter Green. Signs shall be painted on front, back, and edges. Paint will include two (2) coats primer, and two (2) coats paint. Background color shall be Pantone PMS 350-Hunter Green. Lettering and images shall be in white. (Temporary signs shall be as specified; typically white background.)

D. Signage artwork and text may be vinyl or silk screened. If vinyl is used the artwork and text shall have a non-yellowing, UV resistant, urethane clear coat applied to protect the vinyl and provide a graffiti resistant coating. Vendor shall provide color samples and paint color and product specifications to the Owner and Owner's Representative upon request.

E. All signs shall have rounded corners.

2.02 TEMPORARY CONSTRUCTION INFORMATION SIGN

A. Sign shall be made of durable, exterior ¾" marine grade plywood or ¼" metal and shall be professionally printed. Electronic file with sign layout to be provided to contractor and Owner's Representative.

1. Submit samples of color and a Shop Drawing indicating layouts for approval prior to manufacture.

B. Sign shall be project-specific and will include a drawing of the final layout as well as the City's Seal, 311 Logo and other ("Shape up" logo) pertinent information to be provided by the Owner/Owner's Representative. See example below:

C. Sign shall be securely mounted to 4" x 4" (122mm X 122mm) minimum wood posts with galvanized metal attachments or attached to fencing, as directed by the Owner/Owner's Representative. Sign shall be framed so as to be durable, and all attachments and mountings shall be child safe and vandal resistant.

D. See Sample Temporary Construction Information Sign below:



2.03 PARDON OUR APPEARANCE SIGN

A. Sign shall be made of durable, exterior 3/4" marine grade plywood or 1/4" metal and shall be professionally printed. Sign layout to be provided by Owner's Representative.

B. Vendor will submit samples of color and a Shop Drawing indicating layouts for approval prior to manufacture.

C. Sign shall be securely mounted to 4" x 4" (122mm X 122mm) minimum wood posts with galvanized metal attachments or attached to fencing, as directed by the Owner's Representative. All attachments and mountings shall be child safe and vandal resistant.

D. See Sample Pardon Our Appearance Sign below:

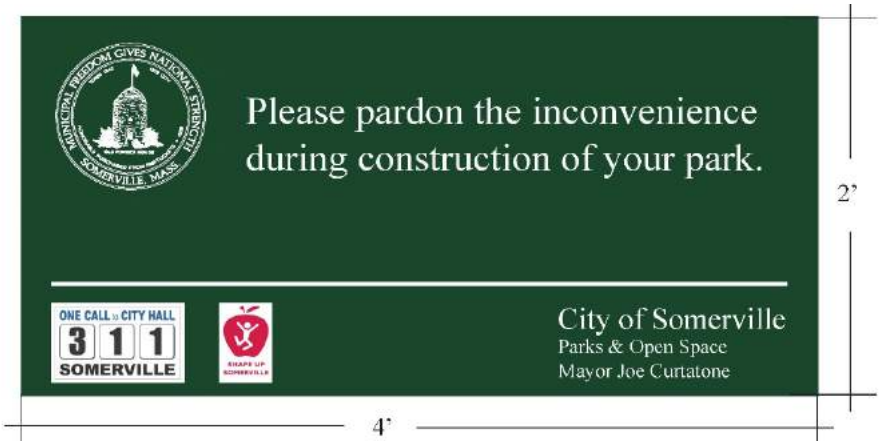

2.04 SCHOOLYARD REGULATIONS SIGNS

A. The Contractor shall furnish and install two (2) new Schoolyard Regulations signs

B. Vendor will submit samples of color and a Shop Drawing indicating layouts for approval prior to manufacture.

C. The new Schoolyard Regulations sign shall be **18" x 18" (457mm x 457mm)** exterior-grade vinyl or screen-printed sign with **white** text and graphics on painted **Pantone PMS 350-Hunter Green** background on 1/8" aluminum or steel, single-sided, sign finish and lettering to be as 2.01 above.

D. Text and artwork shall include the City's Seal, logos, schoolyard regulations text, and park use icons indicating the uses allowed within that park. The sign layout shall be provided to the Contractor by the Owner's Representative during construction. See image on the following page for typical schoolyard regulatory signage dimensions and layout.



E. Signs shall include a backing plate, and tamper proof hardware as necessary to attach the signs to **ornamental fencing**, in a location to be determined and approved by the Owner and Owner's Representative. Metal backing plate shall be painted and will be nonrusting, aluminum, or stainless steel tamper-proof nuts, bolts, washers as necessary.

2.05 COMMUNITY PRESERVATION ACT FUNDING DEDICATION SIGN

A. The Contractor shall furnish and install one new sign acknowledging that project funding was provided through the Somerville Community Preservation Act (CPA).

B. Vendor will submit samples of color and a Shop Drawing indicating layouts for approval prior to manufacture.

C. The CPA dedication sign shall be 13" x 10" with a horizontal orientation, exterior-grade vinyl or screen-printed sign with white text and graphics on painted Pantone PMS 350-Hunter Green background on 1/8" aluminum or steel, single-sided.

D. Text and artwork shall include the City's Seal, and CPA logo. The sign layout shall be provided to the Contractor by the Owner's Representative during construction. See image on the following page for sample layout.



E. Signs shall include a backing plate, and tamper proof hardware as necessary to attach the signs to ornamental fencing, in a location to be determined and approved by the Owner and Owner's Representative. Metal backing plate shall be painted and will be nonrusting, aluminum, or stainless-steel tamper-proof nuts, bolts and washers as necessary.

2.06 WELCOME SIGN, AGES 2-5; OWNER PURCHASED AND CONTRACTOR INSTALLED

A. The Contractor shall install the owner purchased Welcome Sign, Ages 2-5, direct bury, manufactured by Landscape Structures Inc. Sign location to be determined in the field with the Landscape Architect and Owner.

B. See sample Welcome Sign, Ages 2-5 for reference below:



2.07 PROTECT AND RE-INSTALL EXISTING PARK SIGNS

A. The Contractor shall stockpile, protect, and re-install the existing signs. Post and Sign location to be determined in the field with the Landscape Architect and Owner's Representative.

2.08 ACCESSORIES

A. Anchors and Inserts: Provide nonferrous-metal or hot-dip galvanized anchors and inserts for exterior installations and elsewhere as required for corrosion resistance. Furnish inserts, as required, to be set into concrete or masonry work.

PART 3 - EXECUTION

3.01 EXAMINATION

A. Examine substrates, areas, and conditions, with Installer present, for compliance with requirements for installation tolerances and other conditions affecting performance of work.

B. Verify that items provided under other sections of work are sized and located to accommodate signs.

C. Examine supporting members to ensure that surfaces are at elevations indicated or required to comply with authorities having jurisdiction and are free from dirt and other deleterious matter.

D. Proceed with installation only after unsatisfactory conditions have been corrected.

3.02 INSTALLATION

A. General: Locate signs and accessories where indicated, using mounting methods of types described and in compliance with manufacturer's written instructions.

1. Install signs level, plumb, and at heights indicated, with sign surfaces free from distortion and other defects in appearance.

B. Temporary Signs shall be installed facing the street or access point to the construction area so as to be visible and inform the general public. Where possible, the signs should be located so as not to conflict with construction activity nor to require moving during the construction process.

C. The temporary construction information sign shall be maintained in satisfactory condition during construction and then removed and disposed of legally by the Contractor just prior to the final acceptance of the work.

D. The Pardon Our Appearance sign shall be maintained in satisfactory condition during construction and then delivered to the Owner's Representative for re-use upon final acceptance of the work.

3.03 CLEANING AND PROTECTION

A. After installation, clean soiled sign surfaces according to manufacturer's written instructions. Protect signs from damage until acceptance by the Landscape Architect.

END OF SECTION

SECTION 11 68 00
PLAY EQUIPMENT

PART 1 - GENERAL

1.01 GENERAL REQUIREMENTS

A. The conditions of the Contract, including Division 00 and Division 01, apply to the work under this Section.

B. All references to products by manufacturer, trade name or performance Specifications bearing the connotation "or approved equal" shall be as determined by the Landscape Architect and the City.

1.02 WORK INCLUDES

A. All Play equipment in this section not specifically noted as Purchased by Owner, shall be furnished and installed by the Contractor whether salvaged from on site or new as indicated in the Contract Documents. The work of this section includes installation of the site furnishings noted specifically as being purchased by the City of Somerville directly from the product vendors. The City's purchase includes delivery to the project site

B. To be included, but not limited to the following:

1. Tot-Lot Area Playground
    1) Install Play Equipment **Purchased by Owner**
        a) Age 2-5 Climber ("Main Play Structure")
        b) Composite Sensory Panels
        c) 3-bay Single Post swing frame with 4 belt seats and 1 friendship swing
        d) Rhapsody caskata bells
        e) Tongue Drum Junior with Mallet
        f) Independent boppity bridge with bridge supports
        g) Saddle Spinner
    2) Install salvaged play equipment
        a) Saddle Spinner
        b) Wee Planet Climber
    3) **"Contractor Furnish and Install"** EPDM Half Balls on Poured In Place (PIP) slope

1.03 REFERENCES

A. Examine all other Sections of the Specifications and all Drawings for the relationship of the work under this Section and the work of other trades. Cooperate with all trades and all departments of the City of Boston and coordinate all work under this Section therewith.

B. The following related items are included under the Sections listed below:

1. Section 02 41 00 – Site Preparation
2. Section 31 20 00 – Earthwork
3. Section 03 30 00 – Cast in Place Concrete
4. Section 32 18 16 – Playground Protective Surfacing

5. Section 32 30 00 – Site Improvements
6. Section 32 31 00 – Fencing

1.04 SUBMITTALS

A. Provide detailed shop drawings for all play equipment and individual components for review and approval by the Landscape Architect. This submittal must include the following items to be considered complete:
   1. Large-scale drawing showing all play components, their attachment to each other and the associated use zones.
   2. Manufacturer's specifications, installation recommendations and details for all newly furnished play components.
   3. Evidence of compliance with IPEMA certification (ASTM F 1487-95) "Standard Consumer Safety Performance Specification for Playground Equipment for Public Use" for new components.
   4. Material and Workmanship Warranty
   5. Product Liability Insurance Certificate(s): The manufacturer(s) of the new playground components shall have in effect at the time of the completed installation and maintain an insurance policy covering completed operations (Product Liability) with a minimum limit of $1,000,000.00 (One Million Dollars).

B. Provide manufacturer's product material information and system performance data along with material and system samples for each item specified in this Section for the Landscape Architect's review and approval prior to ordering materials.
   1. Provide for EPDM Half Balls (Contractor Furnish and Install)

C. The General Contractor shall verify by field inspection that all items within this section conform to the specified requirements and approved submittals prior to installation.

D. Supply documentation stating the system installer is a manufacturer's certified installer.

1.05 PRODUCT DELIVERY, STORAGE AND HANDLING

A. Contractor is responsible for coordinating the delivery of Owner-purchased equipment with the City and Manufacturer, storing and securing all of the equipment on-site safely within temporary construction fencing prior to the installation.

B. Deliver materials in manufacturer's original unopened and undamaged packages with labels legible and intact.

C. Store materials in unopened packages in a manner to prevent damage from the environment and construction operations.

D. Handle in accordance with manufacturer's instructions.

1.06 DEFINITIONS

A. The following items are included herein and shall mean:
   1. S.S.H.B. - Standard Specifications for Highway and Bridges, the Commonwealth of Massachusetts, Department of Public Works, latest edition.
   2. A.S.T.M. - American Society for Testing and Materials. The following standard specifications are applicable to the associated items as listed.
      1) F1487 …Playground Equipment for Public Use
      2) A36...Steel

3) A153...Zinc Coating (hot-dip) on hardware

4) A307...Carbon Steel bolts 66000 psi tensile

3. CPSC - Consumer Product Safety Commission.
4. ADA - Americans with Disabilities Act and its current regulations.
5. MAAB: Massachusetts Architectural Access Board Rules and Regulations
6. AWS: American Welding Society
7. SSPS: Steel Structures Painting Council

1.07 QUALITY ASSURANCE

A. The playground installation contractor shall provide written certification by a Certified Playground Safety Inspector (CPSI) that the installed equipment and safety surfacing conforms to all applicable safety and accessibility standards including, but not limited to ASTM, CPSC, ADA, and MAAB. The Owner reserves the right to retain an independent CPSI to inspect the playground equipment and surfacing after reinstallation. The Contractor will be responsible for correcting any deficiencies at their own expense to the satisfaction of the Landscape Architect.

PART 2 - PRODUCT

2.01 OWNER PURCHASED TOT-LOT PLAYGROUND EQUIPMENT

A. Please refer to the drawings for the Tot-Lot playground equipment by Landscape Structures (Contact: Brian Iafolla ; brianiafolla@obrienandsons.com 800-835-0056) purchased directly by the Owner (City of Somerville)

B. See below a 3D rendering of the main structure, the swings and the sensory panel.







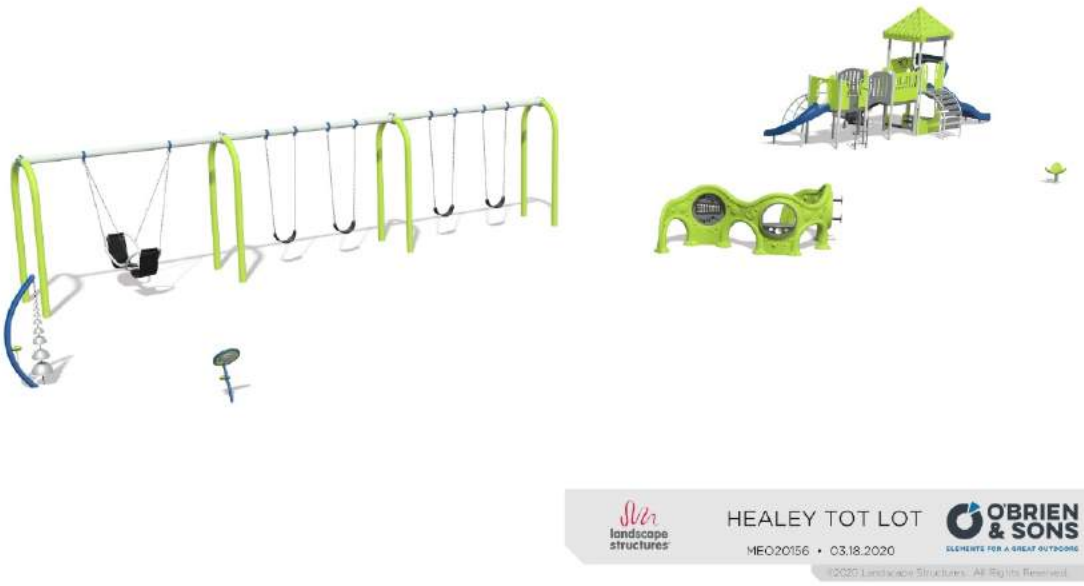

C. The EPDM half-balls are not shown in the above renderings because furnishing those is required by this Contract. Refer to Item 2.02 below.

D. Refer to Appendix for the detailed instructions provided by the manufacturer.

2.02 EPDM HALF BALLS CONTRACTOR FURNISH AND INSTALL

A. Manufacturer: EPDM half balls shall be by Euroflex, Inc., represented by Goric Marketing Group, Inc., 464 Common Street #148, Belmont, MA, 02478, Contact Madalene Sullivan 617-744-0772 or approved equal.

B. Colors: The half-balls shall be color 064 BLUE (RAL 5015) and color 054 DARK BLUE (RAL 5010).

C. General Panel Components:

1. Materials: Rubber granulate shall be 90% recycled rubber. Binding agent shall be MDI polyurethane. Topping shall be colored EPDM rubber granulate.

2. Dimensions: diameter shall be 345, 500, and 695mm as shown on the drawings. Steel anchors shall be ~42.8mm and ~750mm in length.

3. Installation: Half ball shall be glued directly onto the accompanying steel mounting anchor with polyurethane glue. Mounting anchors shall be directly embedded into a concrete footing. Footing for 350mm diameter half ball shall be 305 mm diameter x 500 mm depth. Footing for 500mm diameter half ball shall be 500 mm diameter x 500 mm depth. Footing for 695mm diameter half ball shall be 695 mm diameter x 500 mm depth. Minimum tensile strength shall be 330MPa (48,000 psi). Minimum yield point shall be 310MPa (45,000 psi).

D. EPDM balls shall be **shipped with Air Freight** due to the lead and shipping time.

2.03 EXECUTION

A. Contractor is responsible for coordinating the delivery of Owner-purchased equipment with the City and Manufacturer, storage and securing all of the equipment on-site safely within temporary construction fencing prior to the installation.

B. Equipment shall be assembled to conform to the approved shop drawings. All fastenings shall be made as shown on the approved shop drawings and shall be securely tightened. All work shall be done so that no hazardous projections remain on the finished work.

C. Cleanup: Upon completion of the work under this Section, all excess materials and debris resulting from work under this Section shall be cleaned up, removed from the Site, and properly disposed by the Contractor.

D. Manufacturer's Guarantees and Insurance

1. Product Liability Insurance: The manufacturer of the playground equipment shall maintain, and have in effect at the time of the completed installation, an insurance policy covering completed operations (Product Liability) with a minimum limit of $1,000,000.00 (One Million Dollars). A certificate of insurance shall be available to the project owner on request.

2. Guarantees: The manufacturer shall furnish a written guarantee, covering the replacement of any damaged Structures or components, at no extra charge for the period of 15 (Fifteen) years. This guarantee does not cover Structures damaged by improper use or vandalism. Labor is not covered in this guarantee.

E. Warranties

1. Lifetime Limited Warranty for all stainless-steel fasteners, steel and aluminum posts, clamps, beams and caps, against structural failure due to corrosion/natural deterioration or manufacturing defects. This warranty does not include any cosmetic issues or wear and tear from normal use.

2. 15-Year Limited Warranty on all perforated steel decks and stairs, steel rails, loops and rungs, sheet steel, rotationally-molded and sheet plastic components, recycled plastic lumber and Playweb tubular steel parts.

3. 10 Years on fiberglass signage, Rock Blocks Handholds and steel-core cable.

4. The Contractor shall warrant that all structures and/or equipment installed will conform in kind and quality to the specifications set forth above, and will be free of defect in workmanship and material.

5. The Contractor shall offer a 10-year limited warranty for all aluminum and all posts, clamps, beams, and caps against structural failure due to corrosion, deterioration, or workmanship (cosmetic issues excluded).

6. The Contractor shall offer a 10-year limited warranty for all plastic and steel components against structural failure due to corrosion, deterioration, or workmanship (cosmetic issues excluded).

7. The Contractor shall offer a 1-year limited warranty for all moving parts, swing seats and swing hangers bumpers and other equipment not included above against failure due to corrosion, deterioration, or workmanship.

8. An authorized representative of the play equipment manufacturer must inspect and approve the completed installation. The play equipment will not be accepted by the play equipment manufacturer or the Owner until they are satisfied with the installation. No additional compensation will be given for any necessary corrective work. Contractor shall submit written certification from Manufacturer's Representative that all play equipment has been installed in accordance with manufacturer's prescribed standards.

END OF SECTION

SECTION 12 93 00
SITE FURNISHINGS

PART 1 - GENERAL

1.01 RELATED DOCUMENTS

A. This section is only a portion of the Contract Documents. All of the Contract Documents, including Conditions of the Contract and Division 1 General Requirements, apply to this section.

1.02 DESCRIPTION OF WORK

A. All furnishings in this section not specifically noted as Purchased by Owner, shall be furnished and installed by the Contractor whether salvaged from on site or new as indicated in the Contract Documents. The work of this section includes installation of the site furnishings noted specifically as being purchased by the City of Somerville directly from the product vendors. The City's purchase includes delivery to the project site.

1. Dumor Site Furnishings Purchased by Owner (City of Somerville) – Installation Only
    1) Custom Tree Bench Platform Seating
2. Bicycle Racks
3. Salvaged Buddy Bench
4. Salvaged existing Granite Benches – store on-site and coordinate location with owner

B. The following items shown on the Drawings and/or noted herein shall be furnished and installed under their Sections of the specifications:

1. Concrete for concrete footings under 03 30 00 CAST-IN-PLACE CONCRETE.

1.03 RELATED WORK

A. Carefully examine all the Contract Documents for requirements that affect the work of this Section. Other specification sections that directly relate to the work of this Section include, but are not limited to the following:

1. Section 02 41 13 – Site Preparation
2. Section 03 30 00 – Cast In Place Concrete
3. Section 31 20 00 – Earthwork
4. Section 32 13 13 –Concrete Pavements
5. Section 32 18 00 – Playground Protective Surfacing
6. Section 32 30 00 – Site Improvements
7. Section 32 31 00 – Fencing

1.04 SUBMITTALS

A. Shop Drawings: Refer to individual site furnishings for submittal requirements.

B. Provide manufacturer's product material information and system performance data along with material and system samples for each item specified in this Section for the Architect's review and approval prior to ordering materials.

C. The General Contractor shall verify by field inspection that all items within this section conform to the specified requirements and approved submittals prior to installation.

D. Provide color samples of the actual specified material for approval (no photo representations).

1.05 DELIVERY, STORAGE AND HANDLING

A. Contractor is responsible for coordinating the delivery of Owner-purchased furnishings with the City and Manufacturer, storing and securing all of the Owner-purchased equipment on-site safely within temporary construction fencing prior to the installation.

B. Deliver materials and products and provide adequate protection against damage. Handle in strict compliance with manufacturer instructions and recommendations and store off the ground. Protect from all possible damage including, but not limited to chipping, staining, cracking and other damage. Sequence deliveries to avoid delays, but minimize on-site storage.

1.06 COORDINATION

A. The work of this Section shall be coordinated with that of other trades affecting, or affected by, this work as necessary to assure the steady progress of the work of this Contract.

B. Substrates: Proceed with work only when substrate construction and penetrating work is complete.

C. Coordinate temporary storage location of salvaged granite benches with owner.

1.07 GUARANTEE

A. In addition to the specific guarantee requirements of the GENERAL CONDITIONS and SUPPLEMENTARY GENERAL CONDITIONS, the Contractor shall provide the manufacturers' standard written warranty for each product within this specification. All of these guarantees shall be in addition to, and not in lieu of, other liabilities that the Contractor may have by law or other provisions of the Contract Documents.

PART 2 - PRODUCTS AND EXECUTION (Combined)

2.01 OWNER PURCHASED DUMOR SITE FURNISHINGS

A. Please refer to the drawings and the details for the Dumor Site Furnishings purchased directly by the owner (City of Somerville)

B. Refer to Appendix for the detailed installation instructions provided by the manufacturer

2.02 BICYCLE RACKS

A. Bicycle Racks shall be a "vintage style" with a Somerville custom "Powderhouse" rack plate as shown on the Drawings, manufactured by Dero Inc, of Minneapolis, MN, Custom Fabrications of Harpursville, NY, Cycle Safe Inc. of Grand Rapids, MI or Approved Equal.

B. The rack shall be composed of Schedule 40 Steel Pipe and 1/4" Steel plate. All surfaces shall be smoothed and free from burrs, barbs, splinters, and sharpness, and all edges and ends rolled, rounded, or capped.

C. The entire rack shall be coated with an e-coat primer and then finished with a polyester powder coat. Color: Black.

2.03 SALVAGED BUDDY BENCH

A. Salvaged Buddy Bench shall be inspected, cleaned, and refurbished with any finishes and hardware as needed.

B. The bench shall be reinstalled on a concrete pad in the location per the drawings.

2.04 CLEANING, REPAIR AND PROTECTION

A. Repair minor damage to eliminate all evidence of repair. Remove and replace work that cannot be satisfactorily repaired.

B. Provide temporary protection to ensure that the work will be without dirt, stains, damage or deterioration at time of final acceptance. Clean up stains and spills as they occur. Remove protections and clean as necessary immediately before final acceptance.

C. Upon completion of the work and before acceptance, the Contractor shall remove and dispose of in an approved manner all surplus materials, rubbish, etc. which the Contractor may have accumulated during the course of the work and shall leave the site in a clean and orderly condition. The Contractor shall not abandon any material at or near the site regardless of whether or not it has any value.

END OF SECTION

SECTION 312000
EARTHWORK

PART 1 - GENERAL

1.1 RELATED DOCUMENTS

A. This section is only a portion of the Contract Documents. All of the Contract Documents, including Conditions of the Contract and Division 1 General Requirements, apply to this section.

1.2 DESCRIPTION OF WORK

A. Furnish labor, materials, equipment, transportation and services required to complete all earthwork as specified herein, as indicated on the Drawings, or both. The work includes, but is not limited to the following:

1. General excavation.
2. Trench excavation.
3. Rock excavation, if required, to attain the required grades.
4. Demolition and complete removal of the below grade remains of former structures, utilities, pavement, curbing and other surface treatments as required for new construction as shown on the Drawings.
5. Excavating to the lines and grades indicated or required by the drawings and specified herein.
6. Preparation of subgrade for footings and pavements.
7. Proof-compaction of the existing fill subgrade for proposed play and paved areas.
8. Legal off-site disposal of all unsuitable and excess excavated material, including soil, debris, rocks and cobbles that do not qualify as boulders, as defined herein.
9. Frost protection.
10. Rough grading.
11. Dust control.

1.3 RELATED WORK

A. Carefully examine all the Contract Documents for requirements that affect the work of this Section. Other specification sections that directly relate to the work of this Section include, but are not limited to the following:

1. Section 00315 – Unit Price Form
2. Section 024113 - Site Preparation
3. Section 033000 – Cast In Place Concrete
4. Section 116800 – Play Equipment
5. Section 312500 – Erosion and Sedimentation Control
6. Section 321313 – Concrete Pavements
7. Section 323100 – Fencing
8. Section 323000 – Site Improvements
9. Section 334000 – Storm Drainage Utilities

1.4 STANDARDS AND DEFINITIONS

A. The following standards and definitions are applicable to the work of this Section to the extent referenced herein:

1. MDPW Specifications: The Commonwealth of Massachusetts, Department of Public Works,

Standard Specifications for Highways and Bridges, including latest revisions.

2. CODE: Building Code: Current edition of the Massachusetts State Building Code.
3. ASTM: American Society for Testing and Materials.
4. AASHTO: American Association of State Highway and Transportation Officials.
5. MA DEP: Massachusetts Department of Environmental Protection.
6. US EPA: United States Environmental Protection Agency.
7. MassDOT: Massachusetts Department of Transportation.
8. MCP: Massachusetts Contingency Plan, 310 CMR 40.0000.
9. OSHA: Occupational Safety and Health Administration.
10. ACI: American Concrete Institute.
11. EP: Environmental Professional.
12. Trench Excavation: Excavations of any length where the width is less than twice the depth and where the shortest distance between payment lines does not exceed ten (10) feet.
13. Open Excavation: All excavations not conforming to the definition of Trench Excavation shall be defined as Open Excavation.
14. Invert or Invert Elevation: The elevation at the inside bottom surface of the pipe or channel.
15. Bottom of pipe: The base of the pipe at its outer surface.
16. Unsuitable Material: Soils which, due to their consolidation properties, degree of saturation, gradation or other deleterious characteristics and frozen soils which, in the opinion of the geotechnical engineer, will not provide a stable subgrade, cannot be used as backfill, or do not conform to the requirements of these specifications, shall be considered unsuitable material.
17. Bedding Course: Course placed over the excavated subgrade in a trench before laying pipe.
18. Borrow Soil: Satisfactory soil imported from off-site for use as fill or backfill.
19. Fill: Soil materials used to raise existing grades.
20. Existing Fill: Soil placed at the site previously by others.
21. Rock: For pay purposes, rock shall be defined as bedrock which cannot be removed by conventional excavating equipment (Caterpillar 330 or equivalent) and which requires the use of drills, explosives and/or a rock splitter, as well as individual boulders over three cubic yards in open excavations and over one cubic yard in trench excavations that are removed by power excavating equipment without the use of drills or explosives.
22. Structures: Footings, foundations, retaining walls, slabs, tanks, curbs, mechanical and electrical appurtenances, or other man-made stationary features constructed above or below the ground surface.
23. Unauthorized excavation consists of removing materials beyond indicated sub-grade elevations or dimensions without direction by the Landscape Architect. Unauthorized excavation, as well as remedial work directed by the Landscape Architect, shall be at the Contractor's expense.
24. Utilities: On-site underground pipes, conduits, ducts and cables, as well as underground services within buildings.

1.5 PERMITS, CODES, AND SAFETY REQUIREMENTS

A. Work shall conform to the Drawings and Specifications and shall comply with applicable codes and regulations. Present in writing to the Landscape Architect, all conflicts between the Drawings, Specifications, and applicable codes and regulations, for resolution before commencing the Work.

B. Comply with all rules, regulations, laws and ordinances of the City of Somerville, State of Massachusetts, and Federal entities, and all other authorities having jurisdiction over the project site. The Contractor shall provide all labor, materials, equipment, and services necessary to make the work comply with such requirements without additional cost to the Owner.

C. The Contractor shall not close any street, sidewalk or passageway except as indicated on the Drawings. The Contractor shall so conduct his operations as to interfere as little as possible with the use ordinarily made of roads, driveways, sidewalks or other facilities near enough to the work to be affected thereby. Access to the site shall be as indicated on the Drawings and/or as approved by the Owner.

D. The Contractor shall procure and pay for all permits and licenses required for the complete work specified herein and shown on the Drawings at no additional cost to the Owner.

E. Notify "Dig Safe" and the Owner before starting work; comply fully with utility company requirements.

1.6 EXAMINATION OF SITE CONDITIONS AND DOCUMENTS

A. It is hereby understood that the Contractor has carefully examined the site and all conditions affecting work under this Section. No claim for additional costs will be allowed because of lack of full knowledge of existing conditions as indicated in the Contract Documents or obvious from observation at the site.

B. Plans, surveys, measurements, and dimensions under which the work is to be performed are believed to be correct, but the Contractor shall have examined them for himself during the bidding period, as no allowance will be made for any errors or inaccuracies that may be found except as otherwise provided herein.

1.7 SUBMITTALS

A. Contractor shall provide a 50 lb. minimum sample of each fill material from each proposed source including on-site. Additional samples shall be provided if a change in material type occurs at the borrow source. Allow a minimum of three working days for testing evaluation before material is needed. Once a source of supply for a specific material has been approved for use on the project, the Contractor will bear the cost of testing for any additional materials submitted for the same use.

B. Material Test Reports: From a qualified testing agency indicating and interpreting test results for compliance of the following with requirements indicated:

1. Classification according to ASTM D 2487 of each on-site and borrow soil material proposed for fill and backfill.
2. Laboratory compaction curve according to ASTM D 1557 for each onsite and borrow soil material proposed for fill and backfill.

C. Refer to Paragraph 3.3 “Rock Excavation.”

D. At least four weeks prior to commencing earthwork operations, the Contractor shall submit a

Health and Safety Plan (HASP) prepared in accordance with the provisions of OSHA 29 CFR 1910, for review.

E. The Contractor shall submit the names of the proposed soil re-use facilities for approval.

1.8 LAYOUT AND GRADES

A. The Contractor shall maintain and/or re-establish benchmarks and survey monuments shown on the Drawings, or found to exist on the site, to provide a base reference for the construction. Replace any which may become destroyed or disturbed. The Contractor shall employ and pay all costs for a registered Civil Engineer or Surveyor who is licensed within the jurisdiction of the project site to lay out all lines and grades in accordance with the Drawings and Specifications, and as necessary or required for the construction. The selection of the registered Civil Engineer or Surveyor shall be subject to the Landscape Architect's approval.

B. Submit to the Landscape Architect a written confirmation of locations of all lines, and any discrepancies between conditions and locations as they actually exist and those indicated on the Contract Drawings. Such confirmation shall bear the Civil Engineer's registration stamp.

C. The General Contractor shall not commence any excavation or construction work until the Engineer's verification has been received and approved by the Landscape Architect.

D. The words "finished grades" as used herein shall mean final grade elevations indicated on the Drawings. Spot elevations shall govern over proposed contours. Where not otherwise indicated, project site areas shall be given uniform slope between points for which finished grades are indicated or between such points and existing established grades. Under this Section of the Contract, the Contractor is required to bring all areas to the grade elevations as indicated unless otherwise indicated on the Drawings and as specified herein.

E. Finished grades, contours, and elevations indicated on the Drawings describe final surface elevations for completed construction. The Contractor shall review the Drawing details and Specifications carefully to ascertain specific work limits and requirements for this Contract.

F. The word "subgrade" as used herein, means the required surface of natural soil or acceptable existing fill or approved compacted fill. This surface is immediately beneath any improvements, specially dimensioned fill or other surfacing material.

G. "Rough grading" shall mean excavating or filling to elevations indicated, and to the required depths described herein. The permissible tolerance of rough grading within an area 100 feet square, shall not exceed plus or minus 2 inches. The cost of placing fill material to refill areas having rough grades lower than designed shall be borne by the Contractor.

1.9 PROTECTION OF EXISTING CONDITIONS

A. Frost Protection

1. Make no excavations to full depth indicated when freezing temperature may be expected unless intended improvements can be accomplished immediately after the excavations have been completed. Protect all subgrades from frost. Should protection fail, remove frozen materials and replace with compacted On-Site Processed Fill, Gravel Borrow, or Crushed Stone as directed at no cost to the Owner.
2. The Contractor, free of expense to the Owner, shall keep the operations under this Contract clear and free of accumulation of snow within the Limit of Contract lines as required to carry out the work.
3. No work shall be installed on frozen ground.

4. Should protection fail, remove frozen materials and replace with suitable fill at no cost to the Owner.
5. Frozen soil is unsuitable for use as backfill material.
6. Frost protection shall not constitute a condition for which an increase may be made in the Contract Price.

1.10 MEASUREMENT AND PAYMENT

A. The base bid lump sum price shall include all costs of whatever nature associated with the content of this specification section including, but not limited to, excavation, removal of existing subsurface obstructions, segregating, stockpiling, and handling excavated materials, removal and legal off-site disposal of all excess excavated materials, placing and compacting fill for all site improvements, construction dewatering in accordance with the provisions documented herein, furnishing and placement of all required fill materials, placement and compaction of the specified fill materials in accordance with the procedures documented herein, and dust control.

B. The Contractor shall include in his base bid lump sum price all costs associated with excavating existing fill material to the limits indicated in the contract documents.

C. All proposed site improvements shall be supported on the proof-compacted existing fill or on compacted On-Site Processed Fill placed directly on top of the proof-compacted existing fill.

D. All material re-handling and/or re-location of excess excavated fill on the site shall be included in the lump sum price for earthwork.

E. Removal and/or disposal of unsuitable materials below the grades called for on the Drawings and specified herein shall be paid for in accordance with the Unit Prices after removal of such materials has been authorized by the Landscape Architect and Owner. The quantities of excavation, removal, disposal and backfilling involving an adjustment of the Contract Price shall be subject to measurement verification and approval by the Landscape Architect, prior to the removal of such materials.

F. Payment Lines: The following payment lines shall be used for purposes of Contract Price adjustment to determine volume of materials to be excavated, removed and backfilled.

1. Footings and retaining wall leveling pads: A vertical line one foot from the toe of the footings and/or pads. The depth shall be measured to three inches below the bottom of concrete elevations for footings, twelve inches below retaining walls, and to the bottom of geogrid-reinforced zones where required.
2. Surfaced areas including the synthetic turf fields and the full site: Twelve inches below required subgrade as shown on the details.
3. Utility structures: One foot outside of the outer walls and six inches below the bottom of the structures.
4. Utility trenches: Width shall be the outside diameter of the pipe plus two feet. Maximum depth shall not exceed 1 foot below the bottom of the pipes, etc. For purposes of payment, banks of trenches shall be considered vertical at a distance of the outside diameter of the pipe plus two feet.

G. Compensation for all work required under this Section and not specifically covered elsewhere, shall be included in the Contract Lump Sum Price for Earthwork. For purposes of adjusting the scope of foundation construction, refer to Section 000315 – Unit Price Form.

H. The base bid lump sum price shall include all costs of whatever nature associated with excavation, preparation of the Health and Safety Plan, disposal of fill, disposal of solid waste, stockpiling and handling, trucking, and additional chemical testing of fill materials as may be required by the disposal facilities.

PART 2 - PRODUCTS

2.1 FILL MATERIALS

A. Dense Graded Crushed Stone shall consist of a combination of crusher-run coarse aggregates of crushed stone and fine aggregates of natural sand or stone screenings obtained from an off-site source and uniformly pre-mixed with a predetermined quantity of water. The composite material shall be free from ice, snow, roots, sod, rubbish, soil, hazardous material, clay, loam, or other plastic, deleterious, or organic material, and shall conform to MassDOT Specification Designation, M2.01.7, and the following:

U.S. Sieve No.	Percent Passing By Weight
2"	100
1-1/2"	70 – 100
3/4”	50 – 85
#4	30 – 55
#50	8 – 24
#200	3 – 10

B. 3/4” Crushed Stone shall consist of inert angular material derived from a stone quarry that is hard, durable, double-washed stone, and free of deleterious materials. Gradation shall conform to MassDOT Specification Designation, M2.01.4, and the following:

U.S. Sieve No.	Percent Passing By Weight
1"	100
3/4”	90 – 100
1/2”	10 – 50
3/8”	0 – 20
#4	0 – 5

C. 1-1/2” Crushed Stone shall consist of inert angular material derived from a stone quarry that is hard, durable, double-washed stone, and free of ice, snow, sand silt, clay, loam, shale, or other deleterious or other organic materials. Gradation shall conform to MassDOT Specification Designation, M2.01.1, and the following:

U.S. Sieve No.	Percent Passing By Weight
2"	100
1-1/2”	95 – 100
1”	35 – 70
3/4”	0 – 25

D. Gravel Borrow shall consist of natural inert material that is hard, durable stone gravel and coarse sand, free from loam and clay, surface coatings, and deleterious materials. Gradation shall conform to MassDOT Specification Designation, M1.03.0, Type B, and the following:

U.S. Sieve No.	Percent Passing By Weight
3"	100
1/2"	50 – 85
#4	40 – 75
#50	8 – 28
#200	0 – 10

Gravel Borrow shall have a modified Proctor dry density of at least 130 pounds per cubic-foot.

E. Base Drainage Stone (for Poured in Place Rubber) shall consist of clean, hard, crushed aggregate that is angular and durable derived from a stone quarry free of all deleterious materials. Gradation of sample provided for testing and approval shall be within the following range:

U.S. Sieve No.	Percent Passing By Weight
2"	100
1-1/2"	90 – 100
1"	75 - 100
¾"	65 – 95
½"	55 – 85
⅜"	40 – 75
¼"	25 – 65
No. 4	15 – 60
No. 8	0 – 40
No. 16	0 – 20
No. 30	0 – 7
No. 50/60	0 – 5
No. 100	0 – 3
No. 200	0 – 2

Crushed Stone Base for PIP Rubber shall be crushed so it compacts to a 95% Standard Proctor Compaction.

a. To ensure proper drainage (When stone is saturated and compacted to 95% Proctor):

1) Permeability > 50 in/hr (3.5 X 10^{-2} cm/sec)
2) Porosity of stone > 25%
3) Laboratory test: ASTM D 2434 Permeability of Granular Soils (Constant Head)
4) Field test: ASTM D 3855, Method for Infiltration Rate of Soils Using Double-Ring Infiltrometer
5) Material shall be tested and results shall be reviewed by a City of Somerville Engineer for compliance.

b. Soft aggregate materials such as sedimentary rock sources are not acceptable. Questionable materials shall be evaluated using a sulfate soundness test (ASTM C-88) and LA Abrasion Test (ASTM C-131) and shall be within the following criteria:

Test Method	Criteria
Sulfate Soundness (ASTM C-88)	Not to exceed 10% loss
LA Abrasion (ASTM C-131)	Not to exceed 20% loss

F. Ordinary Fill: Well-graded, natural inorganic soil approved by the Landscape Architect and meeting the following requirements:

1. It shall be free of organic or other weak or compressible materials, of frozen materials, and stones (i) larger than 12 inches maximum dimension at depths greater than 2 feet below finished grade, and (ii) larger than 4 inches within 2 feet below finished grade. Gradation shall conform to MassDOT Specification Designation M1.01.0, and the following:

U.S. Sieve No.	Percent Passing By Weight
6"	100
#10	30 – 90
#40	10 – 70
#200	0 – 15

2. Ordinary Fill may be on-site fill. Ordinary Fill shall be free of organic or other weak or compressible materials and having a maximum particle size of 6 inches.
3. It shall be of such nature and character that it can be compacted to the specified density in a reasonable length of time.
4. It shall be free of highly plastic clays, of all materials subject to decay, decomposition or dissolution, and of cinders or other materials which will corrode piping or other metal.
5. Soils which are suitable for re-use as Ordinary Fill when excavated but become too wet to be compacted or frozen prior to placement shall not be used as Ordinary Fill, and shall be legally disposed of off-site at no additional cost to the Owner.
6. Below a depth of 4 feet below finished grade, boulders up to 2 feet in diameter may be used as Ordinary Fill provided backfill material is placed and compacted around the boulders. Below a depth of 6 feet below finished grade, boulders up to 3 feet in diameter may be used as Ordinary Fill provided backfill material is placed and compacted around the boulders. If the boulders are nested together, the voids should be filled with 3/4" Crushed Stone and the area covered with filter fabric before placing additional fill material.

G. Sand: Sand shall meet the requirements of MassDOT M1.04.1. It shall consist of clean inert, hard, durable grains of quartz or other hard durable rock, free from frost, clay, organics, surface coatings, or other deleterious or organic matter. It shall be graded within the following limits:

U.S. Sieve No.	Percent Passing By Weight
½"	100
⅜"	85 – 100
#4	60 – 100
#16	35 – 80
#50	10 – 55
#100	2 – 10

H. Unsuitable Material:

1. Material containing organic matter, frozen materials, debris, materials subject to decomposition, silts too wet to be stabilized and existing fill which, in the opinion of the Soils Engineer, do not satisfy the design requirements, shall be unsuitable material.

2. Unsuitable material shall be disposed of off-site as directed by the Landscape Architect, at no additional cost to the Owner.

2.2 OTHER MATERIALS

A. Filter Fabric shall consist of Mirafi 140 N or approved equivalent.

2.3 USES OF MATERIALS

A. Fill materials listed above shall be utilized as follows and as otherwise indicated on the Drawings, specified or directed.

B. Gravel Borrow:

1. Directly below exterior surface treatments consisting of concrete surfaces as shown on the Drawings.
2. Elsewhere as shown on the Drawings or specified herein.

C. Ordinary Fill:

1. For general site fill where Crushed Stone or Gravel Borrow are not specified.

D. Crushed Stone:

1. For a minimum 3-inch thickness over all concrete footing bearing surfaces.
2. Elsewhere as shown on the Drawings or specified herein.

E. Sand:

1. As shown on the drawings or specified herein.

F. Filter Fabric:

1. Place Filter Fabric around the ¾" Crushed Stone surrounding the perimeter drain pipes at the base of the site retaining walls.
2. Place Filter Fabric between the ¾" Crushed Stone drainage layer and leveling pad for retaining walls and all other soil materials.
3. Place Filter Fabric between the existing fill subgrade and the overlying Bottom Drainage Layer at Synthetic Turf.
4. Elsewhere as shown on the Drawings or specified herein.

G. Dense-Graded Crushed Stone:

5. As shown on the Drawings or specified herein.

H. Base Drainage Stone for PIP Rubber:

6. Directly below exterior surface treatments consisting of poured in place rubber surfaces as shown on the Drawings or specified herein.

2.4 EQUIPMENT

A. Provide sufficient equipment units of suitable types to spread, level, and compact fills promptly upon delivery of materials.

B. Contractor may use any compaction equipment or device which they find convenient or economical, but the Landscape Architect retains the right to disapprove equipment which, in their opinion, is of inadequate capacity or unsuited to the character of material being compacted.

2.5 SOURCE QUALITY CONTROL

A. Fill materials quality control testing shall be submitted for approval prior to delivery to the site.

B. All fill material that is imported onto the site shall be substantially free of contamination. The concentrations of contaminants in imported fill material shall not exceed either one-half of the Massachusetts Department of Environmental Protection's RCS-1 reporting thresholds, or the pre-existing contaminant conditions at the site, whichever is lower. The Landscape Architect reserves the right to require that the Contractor perform chemical analysis on the sample being submitted to confirm that the sample is free of contaminants as discussed above. It is not likely that chemical analysis will be required for samples representing fill material originating from a commercial bank-run or rock quarry source. However, it is likely that the Landscape Architect will require that chemical analysis be performed on samples originating from sources other than commercial bank-run or rock quarry sources. The required chemical analysis will include, but may not be limited to, Extractable Petroleum Hydrocarbons (EPH), Volatile Petroleum Hydrocarbons (VPH), Volatile Organic Compounds (VOC's) by 8260, Polynuclear Aromatic Hydrocarbons (PAH's) by 8270, Total RCRA-8 Metals, Pesticides/PCB's, and pH. The cost of chemical testing when required by the Landscape Architect shall be borne by the Contractor.

C. Samples of proposed fill material exhibiting concentrations of contaminants in excess of the standards discussed above will be rejected for use on the site by the Landscape Architect.

D. For samples of proposed fill material originating from a recycling facility, the Contractor will also be required to submit documentation demonstrating that the facility is permitted by the Massachusetts Department of Environmental Protection, or the Department provided with the required notification, to perform recycling of Asphalt, Brick, and Concrete (ABC) materials, not coated or impregnated with any substances, in accordance with the Massachusetts solid waste regulations 310 CMR 16.05 (3) (e).

E. Soil submittals shall, at a minimum, include the type of material, identification of the on-site or off-site source, and proposed use of the material.

F. Landscape Architect will be sole and final judge of suitability of all materials.

G. Tests of materials, including chemical testing, as delivered may be made from time to time. Materials in question may not be used, pending test results. Remove rejected materials and replace with new, whether in stockpiles or in place at no addition cost to the Owner.

PART 3 - EXECUTION

3.1 GENERAL REQUIREMENTS

A. Excavate all materials of every description required to construct the site improvements, indicated on the Contract Drawings and specified herein.

B. All excavation shall be performed in the dry. Excavation and dewatering shall be accomplished by methods that preserve the undisturbed state of subgrade soils.

C. When excavations have reached the prescribed depths, the Landscape Architect shall be

notified and will make an inspection of the conditions. After inspection, the Contractor will receive approval to proceed if conditions meet design requirements.

D. No excavation will be permitted below a line drawn downwards at 2 horizontal to 1 vertical from the underside of the closest edge of any proposed or in-place footing or utility at a higher elevation without providing adequate sheeting and bracing to prevent loss of support of the footing or utility.

E. Should an excavation be carried beyond the depth indicated on the drawings or as specified herein as a result of Contractor's error, the Contractor shall provide and place Gravel Borrow, or Crushed Stone, as directed by the Landscape Architect, to the required level at no additional cost.

3.2 EXCAVATION FOR SITE IMPROVEMENT FOUNDATIONS AND PREPARATION OF SUBGRADES

A. All foundations shall bear on the proof-compacted existing fill or compacted Ordinary Fill. A minimum 3-inch thickness of 3/4-inch crushed stone shall be placed over all concrete footing bearing surfaces.

B. Excavation to full depth for footings and/or leveling pads shall not be performed in freezing weather unless concrete or backfill can be placed immediately. Following the pouring of concrete footings, soil beneath footings shall be adequately protected from frost.

C. Excavation of all bearing surfaces shall be performed utilizing a smooth, toothless bucket to prevent disturbance of the bearing surface.

D. All existing topsoil, organic material, and unsuitable material shall be removed below the proposed foundations and leveling pads. All soft and/or compressible areas detected by the proof-compaction shall be excavated and replaced with compacted Ordinary Fill.

E. All existing site improvements, foundation remains, organic material, and unsuitable material shall be removed from below excavations. The resultant subgrade surface shall be proof-compacted, and all soft and/or compressible areas detected during proof-compaction shall be excavated and replaced with compacted Ordinary Fill.

F. All bearing soils which become soft, loose, or otherwise unsatisfactory for support of the structure as a result of inadequate or improper excavation, dewatering, or other construction methods, shall be removed and replaced with compacted Gravel Borrow, or Crushed Stone at the Contractor's expense.

3.3 PLACING FILL

A. Provide all specified fill materials.

B. Areas to be filled shall be undisturbed stable soil and shall be free of trash, construction debris, compressible or decayable materials, and standing water. Do not place fill when subgrade or layers below it are unsuitable.

C. Notify the Landscape Architect when excavations are complete. Filling shall not be started until conditions have been observed by the Landscape Architect.

D. Furnish approved materials. Place fill material in layers not exceeding 6 inches compacted thickness and compact as specified below for various fill conditions.

E. The Contractor shall notify the Landscape Architect three (3) days in advance when the rough grades are established and ready for formal inspection.

3.4 SITE DRAINAGE SYSTEM

A. Furnish and install all materials to construct the site drainage system as shown on the Drawings and as specified herein.

B. Install drain pipes to the elevations indicated on the Drawings.

C. Drain pipes shall be surrounded by 4-inch minimum thickness of 3/4” Crushed Stone.

D. Clean-outs shall be installed as shown on the plan. Clean-outs shall be approved by the Landscape Architect to ensure that they are suitable for the intended surface finishes.

3.5 ROUGH GRADING

A. Rough grading shall include the shaping, trimming, rolling, and refinishing of all surfaces of the subbase, shoulders, and earth slopes, and the preparation of grades as shown on the Drawings. The grading of shoulders and sloped areas may be done by machine methods. All ruts shall be eliminated. Traffic of men and equipment across the soil subgrade areas shall be prohibited following excavation to the required lines and grades.

B. If, during the progress of Work, any pipe, drain, or other construction is damaged due to operations under the Contract, the Contractor shall repair all damage at no additional cost to the Owner and restore damaged areas to their original conditions.

C. Do all other cutting, filling and grading to the lines and limits indicated on the Drawings. Grade evenly to within the dimensions required for grades shown on Drawings and specified herein. No stones larger than four inches (4") in largest diameter shall be placed in upper six inches (6") of fill. Fill shall be left in a compacted state at the end of the work day and sloped to drain.

D. The Contractor shall bring all areas to grades as shown on the Drawings and in the details. The Owners Representative however, may make such adjustments in grades and alignments as are found necessary to avoid special conditions encountered.

E. No rubbish of any description shall be allowed to enter fill material. Such material shall be removed from the site.

F. Wherever streets, lawns, sidewalks, or other items contained within or outside of Limits of Contract lines have been excavated in fulfilling the work required under this Contract, the Contractor shall furnish and install all materials necessary to bring finished surfaces level with the existing adjacent surfaces. All work shall be installed to match the existing conditions in accordance with the governing authority. Notify the proper authorities prior to restoring surfaces outside the Contract Limit Lines.

G. Placed fill materials which become disturbed shall be re-graded and re-compacted. Fill materials which become contaminated shall be removed and replaced, as directed by the Owners Representative.

3.6 SUBGRADE MAINTENANCE

A. The work of this Section shall provide a subgrade which shall be parallel to the finished grades or elevations shown on the Drawings and shall be below finished grades in accordance with the various depths specified herein below.

B. Upon completion of rough grading operations, remove all debris and rubbish and leave areas ready for work by other trades.

C. Subgrades specified above shall be maintained until work by other trades begins. Settlement of fills and washouts shall be corrected by filling and compacting as required.

3.7 DUST CONTROL

A. The Contractor shall take all necessary measures and provide equipment and/or materials to minimize dust from rising and blowing across the site and from impacting neighboring residential property. In addition, the Contractor shall control all dust created by construction operations and movement of construction vehicles, both on the site and paved ways.

B. If dust control is required off-site due to work under this Contract, in addition to watering, sweeping and other methods, the Contractor shall apply calcium chloride in the required amounts to properly control dust. These amounts shall be reviewed by the Landscape Architect prior to application.

C. Do not use oil or similar penetrants. Chemical materials may not be used on subgrades of areas to be seeded or planted.

END OF SECTION

SECTION 312500
EROSION AND SEDIMENTATION CONTROLS

PART 1-GENERAL

1.1 GENERAL PROVISIONS

A. Attention is directed to the CONTRACT AND GENERAL CONDITIONS and all Sections within DIVISION 01 - GENERAL REQUIREMENTS which are hereby made a part of this Section of the Specifications.

1.2 DESCRIPTION OF WORK

A. Work Included: Provide labor, materials, and equipment necessary to complete the work of this Section, including but not limited to the following:

1. Control measures to prevent all erosion, siltation, and sedimentation of construction areas, adjacent areas and off-site areas.
2. Control measures shall be accomplished adjacent to or in the following work areas:
    a. Soil stockpiles and on-site storage and staging areas.
    b. Cut and fill and other stripped and graded areas.
    c. At edge of project limits or in areas adjacent to abutting properties, including rights-of-ways.
3. The Contract Drawings indicate the minimum requirements for sedimentation and erosion control. The Contractor shall install all measures needed to control sediment and erosion as required by the Contractor and Sub-contractor’s construction methods and operations, the weather conditions, and as directed by the Engineer.
4. Additional means of protection shall be provided by the Contractor as required for continued or unforeseen erosion problems, at no additional cost to the Owner.
5. Periodic maintenance of all sediment control structures shall be provided to ensure intended purpose is accomplished. Sediment control measures shall be in working condition at the end of each day.
6. After any significant rainfall, sediment control structures shall be inspected for integrity. Any damaged device shall be corrected immediately.

B. Alternates: Not Applicable.

C. Items to Be Installed Only: Not Applicable.

D. Items to Be Furnished Only: Not Applicable.

E. Related Work: The following items are not included in this Section and will be performed under the designated Sections:

1. Section 024113 – SITE PREPARATION for protection of existing trees and other vegetation to remain.
2. Section 312000 – EARTHWORK for soil materials, excavating, backfilling, and site grading and removal of site utilities.

1.3 SUBMITTALS

A. Refer to Section 013300 – SUBMITTALS, for submittal provisions and procedures.

1. The Contractor shall provide the manufacturer's literature, material specification, and installation instructions for sedimentation and erosion control materials and devices for

approval. Do not order materials until approval of certifications or test results has been obtained. Delivered materials shall match the approved submittals.

1.4 QUALITY ASSURANCE

A. Erosion control measures shall be established at the beginning of construction and maintained during the entire period of construction. On-site areas which are subject to severe erosion, and off-site areas which are especially vulnerable to damage from erosion and/or sedimentation, are to be identified and receive special attention.

B. The Contractor shall install and maintain sedimentation control devices during construction to prevent the movement of sediment from the construction site to off site areas, into adjacent water bodies via surface runoff or into underground drainage systems. Measures to prevent the movement of sediment off site shall be installed, maintained, removed, and cleaned up at no additional cost to the Owner.

C. All land-disturbing activities are to be planned and conducted to minimize the size of the area to be exposed at any one time, and the length of time of exposure.

D. Surface water runoff originating upgrade of exposed areas should be controlled to reduce erosion and sediment loss during the period of exposure.

E. All land-disturbing activities are to be planned and conducted so as to minimize off-site sedimentation damage.

F. The Contractor is responsible for cleaning out and disposing of all sediment once the storage capacity of the sediment facility is reduced by one-half.

G. Inspect, repair, and maintain erosion and sedimentation control measures during construction until permanent vegetation has been established.

H. Remove erosion and sedimentation controls and restore and stabilize areas disturbed during removal.

1.5 REFERENCE STANDARDS

A. The following standards are applicable to the work of this Section to the extent referenced herein:

1. “Massachusetts Erosion and Sedimentation Control Guidelines for Urban and Suburban Areas, A Guide for Planners, Designers and Municipal Officials”, prepared by the Massachusetts Department of Environmental Protection, Bureau of Resource Protection, dated March 1997, reprinted May 2003.

1.6 EXAMINATION OF SITE AND DOCUMENTS

A. It is hereby understood that the Contractor has carefully examined the site and all conditions affecting work under this Section. No claim for additional costs will be allowed because of a lack of knowledge of existing conditions as indicated in the Contract Documents, or obvious from observation of the site.

B. Plans, surveys, measurements, and dimensions under which the work is to be performed are believed to be correct, but the Contractor shall have examined them for himself during the bidding period and formed his own conclusions as to the full requirements of the work involved.

1.7 PERMITS, CODES, AND REGULATIONS

A. Comply with all rules, regulations, laws, and ordinances of the City and State, and all other authorities having jurisdiction over the project site. All labor, materials, equipment, and services

necessary to make the work comply with such requirements shall be provided by the Contractor without additional cost to the Owner.

PART 2-PRODUCTS

2.1 MATERIALS

A. Straw Wattles

1. Straw wattles shall consist of weed free rice straw inside biodegradable netting. Straw wattles shall measure at least nine (9) inches in diameter.
2. Stakes for wattles shall be one of the following materials. Lengths shall be approximately two feet (2').
   a. Wood stakes of sound hardwood, one inch by one inch (1" x 1") in size.
   b. Steel reinforcing bars of at least No. 4 size.

B. Crushed Stone: Crushed Stone: Crushed stone shall consist of durable crushed rock or durable crushed gravel stone, free from ice and snow, sand, clay, loam, or other deleterious or organic material. The crushed stone shall be uniformly blended and shall conform to the following requirements.

Percent Passing by Weight		
Sieve Size	**1 1/2-inch Stone**	**3/4-inch Stone**
2-inch	100	---
1 1/2-inch	95-100	---
1 1/4-inch	---	---
1-inch	35-70	100
3/4-inch	0-25	90-100
1/2-inch	---	10-50
3/8-inch	---	0-20
No. 4	---	0-5

C. Temporary Covers for Drainage Structures

1. Filter fabric for use as temporary covers for drainage structures shall be the same as noted above for siltation fence.
2. Wire mesh for use at temporary drainage structure covers shall be 6" x 6", W2.9 welded wire mesh.
3. Crushed stone shall be as specified herein before.
4. Silt-Sac, Hydro-FloGard + Plus Catch Basin Insert, Ultra-DrainGuard Insert, or approved equal, may be used in lieu of hay bales and filter fabric at catch basins.

PART 3-EXECUTION

3.1 GENERAL REQUIREMENTS

A. The Contractor shall provide suitable and adequate means of sedimentation and erosion control during construction. Control measures shall prevent all erosion, siltation, and sedimentation of waterways, drainage systems, construction areas, adjacent areas and off-site areas. Work shall be accomplished on and/or adjacent to the following work areas:

1. Cut and fill and other stripped and exposed graded areas.

B. Means of protection as noted on the Contract Drawings indicate the minimum provisions necessary. Additional means of protection shall be provided by the Contractor as required for continued or unforeseen erosion problems, at no additional expense to the Owner.

C. Periodic maintenance of all sediment control installations shall be provided to ensure intended purposes are accomplished. Sediment control measures shall be in working condition at the end of each day.

D. After any significant rainfall, sediment control devices shall be inspected for integrity. Any damaged device shall be corrected immediately.

E. The Contractor shall provide adequate means of control of runoff, as to not detrimentally impact downstream conditions during construction. The Contractor shall plan his operations so that permanent drainage mitigation systems such as detention/retention/infiltration basins and chambers are in place and properly functioning prior to connecting upland drainage flows to these systems. The Contractor shall plan his operations such that downstream drainage mitigation measures are in place and functioning before attempting to tie in upgradient drainage systems.

F. In the event that the Contractor is unable to sequence the work so that construction of the permanent drainage mitigation systems precedes the upland work, then the Contractor shall submit a plan indicating his proposed methods of otherwise controlling runoff from the site.

G. The "Massachusetts Erosion and Sedimentation Control Guidelines for Urban and Suburban Areas" should be consulted as a guide for the selection and installation of Best Management Practices to suit the conditions encountered.

3.2 STRAW WATTLE BARRIERS

A. Install straw wattles in locations as shown on Contract Drawings and as directed.

1. Wattles shall be placed in a row with ends overlapping a minimum of two (2) feet.
2. Each wattle shall be embedded in the soil a minimum of two (2) and a maximum of six (6) inches.
3. Wattles shall be securely anchored in place by stakes or rebars driven through the wattles and a minimum twelve (12) inches into the soil. Stakes shall be placed four (4) feet on center.

B. Inspection shall be frequent and repair or replacement shall be made as needed.

C. Wattles shall be removed when they have served their usefulness so as not to block or impede stormwater flows or drainage.

3.3 STABILIZED CONSTRUCTION ENTRANCE

A. Stone size: Use ASTM designation C-33, size No. 2 (1-1/2” to 2-1/2”). Use crushed stone.

B. Length: As effective, but not less than 50 feet.

C. Thickness: Not less than eight inches.

D. Width: Not less than full width of all points of ingress or egress, but not less than 25 feet.

E. Washing: When necessary, wheels shall be cleaned to remove sediment prior to entrance onto public right-of-way. When washing is required, it shall be done on an area stabilized with crushed stone which drains into an approved sediment trap or sediment basin. All sediment shall be

prevented from entering any storm drain, ditch, or watercourse through the use of sand bags, gravel boards or other approved methods.

F. Maintenance: The entrance shall be maintained in a condition which will prevent tracking or flowing of sediment onto public rights-of-way. This may require periodic top dressing with additional stone as conditions demand and repair and/or cleanout of any measures used to trap sediment. All sediment spoiled, dropped, washed or tracked onto public rights-of-way must be removed immediately.

3.4 INLET PROTECTION

A. Install silt fence or straw bales around inlet as specified herein.

B. Install temporary covers at drainage structure locations that may be subject to erosion infiltration and as directed by the Engineer.

C. Inspect drainage structures periodically. Remove sediment accumulation and regrade or replace materials as required.

3.5 DUST CONTROL

A. Throughout the construction period the Contractor shall carry on an active program for the control of fugitive dust within all site construction zones, or areas disturbed as a result of construction. Control methods shall include applying water to affected areas. The source of supply and the method of application for water are the responsibility of the contractor.

B. The frequency and methods of application for fugitive dust control shall be as directed by the Designer with concurrence by the Owner's Representative.

3.6 REMOVAL AND FINAL CLEANUP

A. Once the site has been fully stabilized against erosion, and with the approval of the Owner's Representative remove sediment control devices and all accumulated silt. Dispose of silt and waste materials offsite. Regrade all areas disturbed during this process and stabilize against erosion with surfacing materials as indicated.

END OF SECTION

SECTION 32 13 13
CONCRETE PAVEMENTS

PART 1 - GENERAL

1.01 GENERAL REQUIREMENTS

A. The conditions of the Contract, including Division 00 and Division 01, apply to the work under this Section.

B. The Contractor shall prior to any removal of surplus fill, excavated material, or debris from the site, furnish written evidence satisfactory to the owner or owner's representative that he has an approved dumping location for debris and/or spoil from his/her excavation activities.

1.02 WORK INCLUDED

A. The work of this Section consists of providing all labor, equipment, materials, incidental work, and construction methods necessary to furnish and install the following as indicated on the Contract Documents and as specified herein.

1. Concrete Pavement Pedestrian
2. Concrete Pads
3. Reinforcement
4. Surface finish
5. Curing
6. Penetrating sealer

B. Examine all other Sections of the Specifications and all Drawings for the relationship of the work under this Section and the work of other trades. Cooperate with all trades and all departments within jurisdiction and coordinate all work under this Section.

C. The following related items are included under the Sections listed below.

1. Section 033000 – Cast-in-Place concrete
2. Section 312000 – Earthwork
3. Section 323000 – Site Improvements
4. Section 323100 – Fencing
5. Section 323300 – Site Furnishings

1.03 SUBMITTALS

A. Submit manufacturer's product data for the following:

1. Preformed joint filler
2. Sealants
3. Reinforcement
4. Supports for reinforcement
5. Dowels and dowel caps
6. Concrete mix design
7. Non-shrink grout

B. Shop drawings:

Submit shop drawings that include wall elevations, details and dimensions for all walls, slabs, curbs and any other concrete element. identifying dimensions, sizes, finishes, of reinforcement, bending including bar schedules.

C. Construct Concrete Sample Panels: Samples shall not be constructed in an area of proposed finish work. Samples shall be constructed within the vicinity of the proposed finish work to facilitate comparisons during construction. The samples shall demonstrate the typical installation of concrete, including score lines, expansion joint and sealant, curing and finishing material, surface texture, color, and edge treatment. The accepted sample, upon approval, shall be maintained as the minimum standard of quality for approval of all new concrete pavement work required for the project. If the original sample panel is not approved, the Contractor shall provide additional sample panels, as required, at no additional cost to the Owner until a mock up sample is approved. Unacceptable sample panels shall immediately be removed from the site.

1. Construct 4 foot x 4 foot sample panels of finished 4 inch concrete pavement, for approval, at least 15 days prior to final concrete paving work.
2. Construct 4 foot x 4 foot sample panel sample panels of finished 4 inch concrete pad for bike racks, for approval, at least 15 days prior to final concrete paving work.
    1) Concrete bike rack pad at school entrance must have a high-quality broom finish with a troweled edge.
    2) Provide examples of light and medium broom finish.

1.04 LAWS, ORDINANCES, PERMITS AND FEES

A. The Contractor shall:

1. Give necessary notices, obtain all permits and pay all governmental taxes, fees and other costs in connection with this work, file all necessary plans, prepare documents and obtain all necessary approvals.
2. Obtain all required certificates of inspection for this work and deliver same to the Architect before request for acceptance and final payment for the work.
3. All concrete walks shall conform to the applicable regulations of the Massachusetts Architectural Access Board and the Americans with Disabilities Act.
4. Include in the work, without extra cost to the Owner, any labor, materials, services, apparatus, drawings (in addition to contract drawings and documents) in order to comply with all applicable laws, ordinances, rules and regulations in Belmont and the Commonwealth of Massachusetts, whether or not shown on the Drawings and/or specified.

1.05 1.5 DEFINITIONS

A. The following related items are included herein and shall mean:

1. S.S.H.B. - Standard Specifications for Highways and Bridges, the Commonwealth of Massachusetts, Department of Transportation, latest edition
2. A.S.T.M. - American Society for Testing and Materials
3. A.A.S.H.T.O. - American Association of State Highway and Transportation Officials

1.06 SUBSURFACE INFORMATION

A. The Owner assumes no responsibility for the Contractor's failure to make his own site investigation and makes no representation regarding the character of the soil or subsurface conditions which may be encountered during the performance of the work.

1.07 FINISHED GRADES

A. The words "finished grades" as used herein mean the required final grade elevations indicated on the Drawings. Where not otherwise indicated, site areas shall be given uniform slopes between points, for which finished grades are shown, or between such points and existing grade except that vertical curves or roundings shall be provided at abrupt changes in slope.

1.08 GRADES AND ELEVATIONS

A. The Drawings indicate, in general, the alignment and finished grade elevations. The Landscape Architect, however, may make adjustments in grades and alignment as are found to avoid interference and to adapt the grading to special conditions encountered.

1.09 WORK IN THE PUBLIC WAYS

A. Notify the appropriate municipal officials at least seven calendar days in advance of commencing any work in the public ways to obtain all required permission to perform this work. Perform all work in the public ways in a manner required by the municipal authorities.

B. Should there be any conflict between requirements specified in the Contract Documents and those of the municipality, the municipal requirements shall govern.

C. Do not close or obstruct any streets or sidewalks unless and until they have been discontinued by the appropriate municipal authority or unless and until he shall have first secured all necessary or other permits therefor. No materials whatsoever shall be placed or stored in the streets. Conduct all operations to interfere as little as possible with the use ordinarily made of roads, driveways, sidewalks, or other facilities near enough to the work to be affected thereby.

1.10 QUALITY ASSURANCES

A. Unless otherwise specified, work and materials for construction of the reinforced Portland cement concrete paving shall conform to ACI 316R, and applicable portions of the following:

1. MassDOT Specifications Section 476 Cement Concrete Pavement

B. Surfaces of curb ramps and handicapped access ramps shall be stable, firm and slip resistant. Construct ramps so that water does not accumulate on ramp surfaces.

C. Paving work and base course installation, shall be done only after excavation and construction work which might damage them have been completed. Damage caused during construction shall be repaired before acceptance.

D. Existing paving areas shall, if damaged or removed during course of this project, be repaired or replaced under this Section. Workmanship and materials for such repair and replacement, except as otherwise noted, shall match as closely as possible those employed in existing work installed under this Contract.

E. Pavement, base, or subbase shall not be placed on a muddy or frozen subgrade.

PART 2 - PRODUCTS

2.01 AGGREGATE BASE COURSE

A. Base course shall be specified, provided, installed and paid for under EARTHWORK Specification Section.

2.02 FORM MATERIALS

A. Unless otherwise indicated, construct form work for concrete surfaces with plywood, metal, metal framed plywood faced or other acceptable panel-type materials, to provide continuous, straight, smooth, exposed surfaces.

B. Use plywood complying with U.S. Product Standard PS-1 "B-B (Concrete Form) Plywood," Class I, Exterior Grade or better, mill-oiled and edge-sealed, with each piece bearing legible inspection trademark.

2.03 REINFORCING MATERIALS AND ACCESSORIES

A. Reinforcing Bars: ASTM A615, Grade 60.

B. Welded Wire Fabric (WWF): ASTM A185, welded steel wire fabric. Fabric reinforcement shall be furnished in flat sheets.

1. Provide 6 inches x 6 inches W1.4 x W1.4 WWM for 4 inch thick concrete pavement.

2. Provided 6 inches x 6 inches W2.9 x W2.9 WWM for 6 inch thick concrete pavement.

C. Supports for Reinforcement: Provide supports for reinforcement including bolsters, spacers and other devices for spacing, supporting and fastening reinforcing bars and welded wire fabric in place. Use wire bar type supports complying with CRSI recommendations, unless otherwise acceptable.

1. Supports shall be Lotel Mesh-ups reinforcing chairs or approved equal.

D. Steel expansion dowels shall be hot-rolled plain steel rounds conforming to the requirements of AASHTO M31, Grade 60 and consisting of a one-half inch by twenty-four inches (5/16”x12”) smooth steel dowel and compatible waxed tube sleeve, twelve inches (6”) in length. Dowels and sleeves shall be as furnished by A.H. Harris & Sons, Inc., by U.S. Steel Corp., by Edgecombe Steel Corp., or approved equal. Dowels shall be epoxy coated.

2.04 PORTLAND CEMENT CONCRETE

A. Slabs-on-Grade: Proportion normal weight concrete mixture as follows:

1. Minimum Compressive Strength: 4500 PSI at 28 days.

2. Maximum water – cementitious material ratio: 0.45.

3. Slump limit: 4-in., plus or minus 1-in.

4. Air Content: 6 percent, plus or minus 1 1/2 percent at point of delivery for 3/4-in. nominal maximum aggregate size. Do not allow air content of trowel- finished floors to exceed 3 percent.

B. Exterior Paving Concrete: Proportion structural normal weight concrete mixture as follows:

1. Minimum Compressive Strength: 5000 PSI at 28 days.

2. Maximum water – cementitious material ratio: 0.40.

3. Slump Limit: 4-in., plus or minus 1-in.

4. Air Content: 6 percent, plus or minus 1 1/2 percent at point of delivery for ¾-in. nominal maximum aggregate size.

C. Cement shall be stored in a weather-tight structure and in such a manner as to prevent deterioration or intrusion of foreign matter. It shall be easily accessible for proper inspection and identification of each shipment. Cement that has hardened or partially set shall not be used.

2.05 CURING COMPOUNDS

A. All curing compounds shall conform to requirements of ASTM Designation C-309, Type I, clear and C-156. No materials containing wax or saponifiable materials will be permitted.

B. Curing compound shall be Master Builders "Master Seal", Symons "Cure and Seal", Sonneborn "Kure-N-Seal", "CS-309" by W.R. Meadows or equal, conforming to ASTM 309, Type 1 and 2.

2.06 EXPANSION JOINTS

A. Provide expansion joints, unless otherwise indicated on the Contract Documents, at 30 feet on-center, maximum.

B. Expansion Joint Filler:

1. Expansion joint filler shall be closed cell polymer foam meeting requirements of ASTM D1752, Sections 3.1 to 3.4, based on compression requirement of 10 psi minimum and 25 psi maximum. Recovery rate following 50-percent compression shall exceed 99-percent recovery, per ASTM D545. Foam shall be Ceramar foam filler manufactured by W.R. Meadows Co. or an approved equal. Joint sealant shall color match concrete refer to section 03300 for joint sealant requirements

2. Expansion joint filler shall have a removable cap cover for the joint filler with integral permanent plastic bond breaker such as Snap-Cap from Seal Tight manufactured by W.R. Meadows, Inc., or approved equal. Cover width shall be sized to match width of joint filler.

C. Expansion Dowels: refer to Reinforcing Materials in this Section.

2.07 JOINT SEALANT

A. Joint sealant and primer shall be polyurethane-based, one component, elastomeric sealants, complying with Fed. Spec. TT-S-00230C, Class A Type 1. Color shall be as selected by the Architect. Sealants shall be self-leveling pour grade type.

1. Vulkem 45, as manufactured by Mameko International, 4475 East 175th Street, Cleveland Ohio 44182, (800) 321-6412.

2. Urexpan NR-210, as manufactured by Pecora Corporation, 165 Wambold Road, Harleysville, PA 10348, (215) 723-6051

3. PSI 952, as manufactured by Polymeric Systems Inc., Phoenixville, PA, (800) 228-5548.

B. B. Provide only materials which are known to be fully compatible with the actual installation condition, as shown by the manufacturer's published data or certification. Use manufacturer's recommended joint primer.

2.08 PROPORTIONING AND DESIGN OF MIXES

A. Prepare design mixes for each type and strength of concrete by either laboratory trial batch or field experience methods as specified in ACI 301. If trial batch method used, use an independent testing facility acceptable to Architect for preparing and reporting proposed mix designs. The testing facility shall not be the same as used for field quality control testing unless otherwise acceptable to Architect.

B. Submit written reports to Landscape Architect of each proposed mix for each class of concrete at least 15 days prior to start of work. Do not begin concrete production until mixes have been reviewed by the Landscape Architect.

C. Adjustments to Concrete Mixes: Mix design adjustments may be requested by Contractor when characteristics of materials, job conditions, weather, test results, or other circumstances warrant; at no additional cost to Owner and as accepted by Architect. Laboratory test data for revised mix design and strength results must be submitted to and accepted by Architect before using in work.

2.09 CONCRETE MIX

A. Job-Site Mixing: Mix materials for concrete in appropriate drum type batch machine mixer. For mixers of one cu. yd., or smaller capacity, continue mixing at least 1-1/2 minutes, but not more than 5 minutes after ingredients are in mixer, before any part of batch is released. For mixers of capacity larger than one cu. yd., increase minimum 1-1/2 minutes of mixing time by

15 seconds for each additional cu. yd. or fraction thereof.

B. Provide batch ticket for each batch discharged and use in work indicating project identification name and number, date, mix type, mix time, quantity, and amount of water introduced.

C. Ready-Mix Concrete: Comply with requirements of ASTM C94, and as herein specified.

D. Delete reference for allowing additional water to be added to batch for material with insufficient slump. Addition of water to the batch will not be permitted.

E. During hot weather, or under conditions contributing to rapid setting of concrete, a shorter mixing time than specified in ASTM C94 may be required.

F. When air temperature is between 85 Deg. F (30 deg. C) and 90 Deg. F (32 deg. C), reduce mixing and delivery time from 1-1/2 hours to 75 minutes, and when air temperature is above 90 Deg. F. (32 deg. C), reduce mixing and delivery time to 60 minutes.

2.11 PENETRATING SEALER

A. Penetrating clear sealer for exterior concrete shall be “MasterProtect H 1000” Penetrating Clear Sealer as manufactured by BASF, or approved equal from Euclid Chemical or Sika Corporation. Clear breathable, high-performance, 100 percent silane, water repellent sealer for protecting horizontal and vertical concrete surfaces. Penetrates deeply, sealing out water, chloride ions, and acids, preventing damage from freeze/thaw cycles.

PART 3 - EXECUTION

3.01 PREPARATION OF SUBGRADE

A. Areas to be paved shall be compacted and brought to subgrade elevation and all work specified, performed and paid under Section 312000 – Earthmoving. Prepared subgrade will be inspected by the Owner’s Representative. Contractor shall arrange to have the Owner’s Representative visit the site to inspect and approve subgrade.

3.02 AGGREGATE BASE COURSE

A. Base course shall be specified, provided, installed and paid for under EARTHWORK Specification Section.

3.03 FORMWORK

A. Forms shall conform to the lines, dimensions and shapes of concrete shown providing for openings, recesses, keys, slots, beam pockets and projections as required.

B. Make forms clean and free of foreign material before placing concrete.

C. Do not use earth cuts as forms for vertical surfaces, unless approved by the Architect.

D. Design of Formwork

1. Comply with ACI 301, Chapter 4, Paragraph 4.2. Formwork drawings shall bear the seal of licensed professional engineer.

2. Form rods and tie wires of exterior surfaces shall slope down form the inside to outside of forms.

3. Provide forms so that no discernible imperfection is in evidence in finished concrete surfaces due to deformation, bulging, jointing, or leakage of forms.

3.04 REINFORCEMENT MATERIAL

A. Steel reinforcing shall be thoroughly cleaned of all foreign material which may reduce the bond between the concrete and reinforcing.

B. Welded wire mesh shall be placed midway within the depth, and parallel to the finished concrete pavement surface. Do not pour concrete over top of reinforcement unless it is supported underneath. Where mesh reinforcement is spliced, it shall be lapped at least 12 inches.

C. Reinforcing steel anchors shall be securely wired in the exact position called for, and shall be maintained in that position until concrete is placed.

D. Unless otherwise indicated on the Contract Documents, reinforcing shall extend within 2 inches of formwork and expansion joints.

3.05 EXPANSION JOINTS

A. Expansion joints shall be as located on the Contract Documents. Expansion joint shall be formed in the concrete to required width with preformed joint filler in place. Joint filler shall extend the full depth of the slab.

1. For concrete pavements, depth of joint filler shall be as required to form a 3/4 -inch deep sealant recess below finished concrete surface.

B. Provide expansion joints as indicated on the Contract Documents. Unless otherwise indicated on the Contact Documents, expansion joints shall be located at 30 feet on-center, maximum.

1. Expansion joints shall be placed where pavement meets flush foundations and footings, concrete vertical curb or other vertical structures, including light bases, hydrants, walls, buildings, piers and walls, and at other conditions as shown on the Contract Documents.

2. Contractor shall request the presence of the Owner's Representative to review the layout of expansion joints prior to pouring the concrete.

3. Follow the manufacturer's application recommendations for joint filler and sealer.

4. Joint alignment shall be straight and true.

C. Where the expansion dowel system is used in the expansion joints, steel plates and pocket former sleeves shall be set parallel with the top and bottom surfaces of the concrete slab and installed according to the manufacturer's installation instructions.

3.06 PORTLAND CEMENT CONCRETE

A. Ready Mix Concrete

1. Comply with ASTM C94.

2. Add mixing water only at the site.

3. Discharge the concrete completely at the site within 1-1/2 hours after the introduction of the cement to the aggregates. In hot weather reduce this time limit so that no stiffening of the concrete shall occur until after it has been placed.

B. Begin the mixing operation within thirty minutes after the cement has been intermingled with the aggregates.

C. Placing Concrete

1. Remove water and foreign matter from forms and excavations and, except in freezing weather or as otherwise directed, thoroughly wet wood forms just prior to placing concrete. Place no concrete on frozen soil and provide adequate protection against frost action during freezing weather.

2. Soil bottom for slabs and footings, reinforcing, inserts, and forms shall be reviewed by Architect or his designate before placing concrete.

3. To secure full bond at construction joints, surfaces of concrete already placed,

including vertical and inclined surfaces, shall be thoroughly cleaned of foreign materials and laitance, roughened with suitable tools such as chipping hammers or wire brushed, and re-cleaned by stream of water or compressed air. Well before new concrete is deposited, joints shall be saturated with water. After free or glistening water disappears, joints shall be given thorough coating of neat cement slurry mixed to consistency of very heavy paste. Surface shall receive coating of at least 1/8 inch thick; this shall be scrubbed in by means of still bristly brushes. New concrete shall be deposited before neat cement dries.

4. Do not place concrete having a slump outside of allowable slump range.

5. Transport concrete from mixer to place of final deposit as rapidly as practical by methods that prevent separation of ingredients and displacement of reinforcement and that void rehandling. Deposit no partially hardened concrete. When concrete is conveyed by chutes, equipment shall be of such size and U-shaped design as to insure continuous flow in chute. Flat (coat) chutes shall not be employed.

6. During and immediately after depositing, concrete shall be thoroughly compacted by means of internal type mechanical vibrators or other tools, spading to produce required quality of finish.

7. Vertical lifts shall not exceed 18 inches. Vibrate through successive lifts to avoid pour lines. Vibrate first lift thoroughly until top of lift glistens to avoid stone packets, honeycomb and segregation.

8. Concrete shall be deposited continuously and in layers of such thickness that no concrete will be deposited on concrete that has hardened sufficiently to cause formation of seams and planes of weakness within section. If section cannot be placed continuously between planned construction joints, as specified, field joint and additional reinforcement shall be introduced so as to preserve structural continuity. Architect shall be notified in any such case.

D. Curing

1. It is essential that concrete be kept continuously damp from time of placement until end of specified curing period. It is equally essential that water not be added to surface during floating and troweling operations, and not earlier than 24 hours after concrete placement. Between finishing operations surface shall be protected from rapid drying by a covering of waterproofing paper. Surface shall be damp when the covering is placed over it, and shall be kept damp by means of a fog spray of water, applied as often as necessary to prevent drying, but not sooner than 24 hours after placing concrete. None of the water so applied shall be troweled or floated into surface.

2. Concrete surfaces shall be cured by completely covering with curing paper or application of a curing compound.

    1) Concrete cured using waterproof paper shall be completely covered with paper with seams lapped and sealed with tape. Concrete surface shall not be allowed to become moistened between 24 and 36 hours after placing concrete. During curing period surface shall be checked frequently, and sprayed with water as often as necessary to prevent drying, but not earlier than 24 hours after placing concrete.
    2) If concrete is cured with a curing compound, compound shall be applied at a rate of 200 square feet per gallon, in two applications perpendicular to each other.
    3) Curing period shall be seven days minimum.

3.07 FORM REMOVAL

A. Do not remove forms until the concrete has thoroughly hardened and has attained sufficient strength to support its own weight and construction live loads to be placed thereon, without damage to the structure. In general, do not disturb forms for framing until the concrete has

attained at least 40% of design strength for side forms and 80% of design strength for bottom forms. Remove no forms for 24 hours after placing concrete. Protect concrete walks from pedestrian traffic for a period of 3 days after placing. Damp cure as per standards above. Be responsible for proper form removal and replace any work damage due to inadequate maintenance or improper or premature form removal.

B. Where use of metal form ties extending to within less than 1-1/2 in. of the face of permanently exposed concrete has been unavoidable, cut off such ties at least 1-1/2 in. deep in the concrete but not less than 72 hours after concrete has been cast. Remove forms by methods which will not spall the concrete or cause any injury whatsoever. Hammering or prying against concrete will not be permitted.

3.08 FIELD QUALITY CONTROL

A. Sampling and testing for quality control during placement of concrete may include the following, as directed by the Landscape Architect.

B. Sampling Fresh Concrete: ASTM C172, except modified for slump to comply with ASTM C94.

C. Slump: ASTM C143, one test for each concrete load at point of discharge; and one test for each set of compressive strength test specimens.

D. Air Content: ASTM C173, volumetric method for lightweight or normal weight concrete; one for each set of compressive strength test specimens.

E. Concrete Temperature: Test hourly when air temperature is 40 deg. F (4 deg. C) and below, and when 80 deg. F (27 deg. C) and above; and each time a set of compression test specimens made.

F. Compression Test Specimen: ASTM C31; one set of 6 standard cylinders for each compressive strength test, unless otherwise directed. Mold and store cylinders for laboratory cured test specimens except when field-cure test specimens are required.

G. Compressive Strength Tests: ASTM C39; one set for each 100 cu. yds. or fraction thereof, of each concrete class placed in any one day or for each 5,000 sq. ft. of surface area placed; 1 specimen tested at 7 days, 2 specimens tested at 28 days, and one specimen retained in reserve for later testing if required.

H. When strength of field-cured cylinders is less than 85% of companion laboratory-cured cylinders, evaluate current operations and provide corrective procedures for protecting and curing the in-place concrete.

I. Strength level of concrete will be considered satisfactory if average of sets of three consecutive strength test results equal or exceed specified compressive strength, and no individual strength test result falls below specified compressive by more than 500 psi.

J. Test results will be reported in writing to Landscape Architect and Contractor on same day that tests are made. Reports of compressive strength tests shall contain the project identification name and number, date of concrete placement, name of concrete testing service, concrete type and class, location of concrete batch in structure, design compressive strength at 28 days, concrete mix proportions and materials; compressive breaking strength and type of break for both 7-day tests and 28-day test.

K. Additional Tests: The testing service may make additional tests of in-place concrete when test results indicate specified concrete strengths and other characteristics have not been attained in the structure. Testing service may conduct tests to determine adequacy of concrete by cored cylinders complying with ASTM C42, or by other methods as directed. Contractor shall pay for such tests conducted, and any other additional testing as may be required, when unacceptable concrete is verified.

3.09 FINISHING

A. General Requirements for Flatwork: Strike off top surfaces of finished fill and monolithic slabs

true and level within a tolerance of 1/8 in. in 10 ft. and measured with a 10 ft. straightedge placed in any direction at any location. Set edge forms and intermediate screed strips accurately and sufficiently rigid to support screeds and so that proper surface elevations and concrete thickness are achieved allowing for dead load deflection and camber of formwork. Take measurements and control tolerances by the use of transit instrument. Upon completion of leveling, remove screed and fill spaces with concrete. Concrete shall have a medium broom finish of parallel marks. Brooming shall be at right angles to the axis of walk or as shown on the Drawings.

B. Concrete bike rack pad shall have troweled edges.

C. Control Joints in concrete paving shall be saw cut joints, sawn by using a diamond blade concrete power saw. To prevent random cracking, control joints shall be cut as soon as the concrete is hard enough that the edges abutting the cut do not chip from the saw blade. Sawn joints shall be true to layout indicated in the Contract Drawings.

1. Control joint depth shall be a minimum 25 percent of slab depth.

3.10 PENETRATING SEALER

A. Apply two coats of approved penetrating sealer to all exposed concrete surfaces in accordance with the manufacturer's recommendations for complete uniform coverage after approval of sealer application on concrete paving mockup.

3.11 PROTECTION OF CONCRETE SURFACES

A. Protection of Concrete: Under no circumstances shall the Contractor pour and leave the fresh concrete open to vandalism, while it is setting up. Damaged concrete shall be subject to rejection by the Landscape Architect.

3.12 ACCEPTANCE STANDARDS

A. The following acceptance standards shall be applied to this Contract. Any portion of the concrete paving that does not meet these required acceptance standards shall be removed at the direction of the Owner's Representative. Saw cut pavement at nearest adjacent tooled joint, remove concrete pavement and discard off site in a legal manner and replace with new concrete pavement meeting the requirements of this Section.

1. Pavement surfaces shall be free of all cracking.
2. Pavement surfaces shall not pond water.
3. Pavement surfaces shall be free of visible high and low spots.
4. Steel mesh reinforcing shall not penetrate the surfaces or sides of the concrete slab.
5. Sawcut joints and all expansion joints shall be straight, true, uniform in width and free from twists, bends, kinks and misalignments.
6. Edges and the associated edging patterns shall be consistent, true, crisp and complete.
7. Pavement shall show no graffiti. Pavement shall show no rubbed surfaces indicative of attempts to erase graffiti.
8. Expansion joints and score joints shall be placed as required by the Contract Documents.
9. Concrete surfaces shall be free of all stains, including those created during the course of the construction by the Contractor, caused by natural events, or caused by vandalism.
10. All sawcut joints and expansion joints shall be flush.
11. Pours different in color as determined by the Owner's Representative.

12. Pours without expansion joints cast into them.
13. Pours not conforming to the Contract Documents.
14. All forms shall be removed from the site.

END OF SECTION

SECTION 32 18 00
PLAYGROUND PROTECTIVE SURFACING

PART 1 - GENERAL

1.01 RELATED DOCUMENTS

A. All of the Contract Documents, including General and Supplementary Conditions and Division 1 apply to the work of this Section.

1.02 DESCRIPTION OF WORK

A. Provide all labor, equipment, implements and materials required to furnish, install, construct and perform all paving operations complete as shown on drawings and specified herein.

B. Work includes, but is not limited to the following:

1. Poured-in-Place Rubber Safety Surfacing
2. Color Surfacing for Pavement Painted Graphics
3. Cleaning, Repair and Protection

1.03 RELATED WORK

A. Carefully examine the site and all of the Contract Documents for requirements that affect the work of this Section. No claim for additional costs will be allowed because of lack of full knowledge of existing conditions. Other specifications sections that directly relate to the work of this Section include, but are not limited to, the following:

B. The following related items are included under the Sections list below:

1. Section 11 68 00 – Play Equipment
2. Section 31 20 00 – Earthwork
3. Section 32 13 13 –Concrete Pavements
4. Section 32 30 00 – Site Improvements
5. Section 32 31 00 – Fencing
6. Section 33 40 00 – Storm Drainage Utilities

C. The work of this Section shall be coordinated with that of other trades affecting, or affected by, this work, as necessary to assure the steady progress of all work of the Contract.

1.04 REFERENCES

A. The following related items are included herein and shall mean:

1. S.S.H.B. - Standard Specifications for Highways and Bridges, the Commonwealth of Massachusetts, Department of Public Works, latest edition.
2. A.S.T.M. - American Society for Testing and Materials.

B. American Society of Testing and Materials (ASTM)

1. 355 Shock Absorbing Properties of Playing Surface Systems and Materials (GMAX)
2. F1292 Impact Attenuation of Surface Systems Under and Around Playground Equipment
3. F1951 Determination of Accessibility of Surface Systems Under and Around Playground Equipment

1.05 SUBMITTALS

A. Submit Poured-in-Place Rubber manufacturer’s Product Literature including IPEMA certification, Specification Data and installation instructions.

1. Provide color samples (12” x 12” square, up to 12 samples) to Owner/Landscape Architect
2. Submit test results for impact attenuation in accordance with ASTM F 1292 Standard Specification and accessibility in accordance with ASTM F1951.
3. Provide Manufacturer’s Warranty for Owner’s acceptance.
4. Submit test results for impact attenuation in accordance with ASTM F 1292 Standard Specification and accessibility in accordance with ASTM F1951. Submit evidence of IPEMA (International Playground Equipment Manufacturer’s Association) certification.

B. Submit installer qualifications (Manufacturer-certified installer of system).

1. Installers of the rubber safety surface system shall have five (5) years experience, minimum, and shall provide three (3) local references where installation can be inspected.

C. The General Contractor shall verify by field inspection that all items within this section conform to the specified requirements and approved submittals prior to installation.

1.06 DELIVERY, STORAGE AND HANDLING

A. Deliver materials and products and provide adequate protection against damage. Handle in strict compliance with manufacturer instructions and recommendations and store off the ground. Protect from all possible damage including, but not limited to chipping, staining, cracking and other damage. Sequence deliveries to avoid delays, but minimize on-site storage.

1.07 COORDINATION

A. The work of this Section shall be coordinated with that of other trades affecting, or affected by, this work as necessary to assure the steady progress of the work of this Contract.

B. B. Start of work under this Section shall constitute acceptance of the foundation conditions to which this work is to be applied. Any defects in work resulting from such conditions shall be corrected under this Section, at no extra cost to the Owner.

C. Substrates: Proceed with work only when substrate construction and penetrating work is complete. Maintain the sub-base in satisfactory condition and properly drained until surface improvement is placed.

1.08 GUARANTEE

A. The Contractor shall deliver standard written manufacturer’s guarantee in the Owner’s name covering all materials and workmanship. In addition to the specific guarantee requirements of the GENERAL CONDITIONS and SUPPLEMENTARY GENERAL CONDITIONS, the Contractor shall provide the manufacturers’ standard written warranty for each product within this specification. All of these guarantees shall be in addition to, and not in lieu of, other liabilities that the Contractor may have by law or other provisions of the Contract Documents.

1.09 QUALITY ASSURANCE

A. Surface Installer Qualifications: Company specializing in outdoor resilient surfaces in the USA and certified members of NPCAI. The applicator shall be approved and trained, with a minimum of five years' documented experience and have completed 5 public playgrounds in the past 5 years. Conditions of all surface substrates with respect to structural performance shall be evaluated and approved by the surface installer prior to application of surface system.

B. Performance requirements

1. All safety surfacing within playground equipment use zones shall meet or exceed the performance requirements of the CPSC, ADA and Fall Height Test ASTM F 1292 and IPEMA certified for the highest playing point of each piece of play equipment.

2. Surfaces intended to serve as accessible routes of travel shall be firm, stable and slip resistant and shall be meet the requirements of ASTM F 1951 and ASTM F 1292

C. Post-installation testing

1. Impact attenuation testing shall be performed by a National Recreation and Parks Association/National Playground Safety Institute (NRPA/NPSI) Certified Playground Safety Inspector (CPSI) and trained in the proper operation of the Triax test equipment.
2. Impact attenuation testing shall be performed according to ASTM 1292 in presence of the owner within 30 days of installation. As a precondition of surfacing acceptance, the Contractor shall provide the testing results in writing. Up to 10 drop test locations will be required at each separate play area.
3. If the surfacing does not meet the safety standards or impact attenuation performance requirements, the contractor will be required to bring the surfacing up to compliance within 30 days or less. The extent of failure and determination of replacement will be at the discretion of the Owner. Should they be found during or after installation, any violations of the C.P.S.C. Guidelines, ASTM, ADA or impact attenuation performance requirements shall be corrected to the satisfaction of the owner, any proposed corrective work shall be reviewed and approved by the Landscape Architect before corrective work begins.
4. Impact attenuation requirements: Gmax test results shall be less than 150 and HIC test results shall be less than 850

1) Refer to the drawings for fall height zones and chart below for minimum depth of safety surfacing. Actual depths shall be increased as needed by safety surfacing installation contractor to achieve test results that do not exceed the maximum specified Gmax and HIC requirements.

FALL HEIGHT	
MIN PIP DEPTH	FALL HEIGHT
2.5”	4’
3”	5’
3.5”	6’
3.5”	7’
4”	8’
4.5”	9’
5”	10’
6”	12’

D. The Contractor shall deliver standard written manufacturer’s guarantee in the Owner’s name covering all materials and workmanship. In addition to the specific guarantee requirements of the

PART 2 - PRODUCTS

2.01 GRADING AND COMPACTION OF SUB-BASE

A. Do all necessary grading in addition to that specified under Section 31 20 00 -

EARTHWORK to bring subgrade or foundation after final compaction to required grades and sections to obtain a foundation of uniform bearing surface. In absence of specific requirements, compact foundation by such means as will provide firm base and insurance against settlement of superimposed work.

B. Sub-base preparation, including material, shall be of properly approved quality as specified under Section 31 20 00 - EARTHWORK. Start of work under this Section shall constitute acceptance of the foundation conditions to which this work is to be applied. Any defects in work resulting from such conditions shall be corrected under this Section, at no additional cost to the Owner.

2.02 POURED-IN-PLACE RUBBER SAFETY SURFACING

A. Furnish and install Poured-in-Place Rubber Safety Surface complete with gravel base, subdrainage and concrete edging per the Contract Documents.

B. Poured-in-Place material shall be “Playbound” 2-layer poured-in-place by Surface America, www.surfaceamerica.com, PO Box 157, Williamsville, NY 14231; Telephone: (800) 999-0555, Fax: (716) 632-8324 or Landscape Architect approved equal.

1. Primer shall be as per manufacturer’s system, and recommended by manufacturer.
2. Cushion Course: blend of 100% recycled SBR (Styrene Butadiene Rubber) and aromatic polyurethane binder. Cushion course thickness per the Contract Documents, and final poured-in-place surfacing depth shall be in accordance with fall height CPSC safety requirements. Required mix proportions by weight: as ratio 14% aeromatic urethane divided by 86% rubber
3. Top Surface; thickness shall be per the Contract Documents. Required mix proportions by weight: as ratio 18% aliphatic urethane divided by 82% rubber.
4. Top Surface; thickness shall be per the Contract Documents. Required mix proportions by weight: as ratio 18% urethane divided by 82% rubber.
5. There will be 4 different PIP color choices throughout the playground. For each zone, contractor shall supply 5 samples of 12” x 12” tiles for total of up to 20 color tiles for Landscape Architect to make final selection during submission process.

    1) Color Surface A (Medium Grey): This will be selected from one of the three colors physical mockups using EPDM (Ethylene Propylene Diene Monomer)

        - 60% Light Grey and 40% Black
        - 50% Light Grey, 30% Black and 20% Pearl
        - 50% Light Grey and 50% Black

    2) Color Surface C (Chartreuse): This will be selected from one of the three colors physical mockups using EPDM (Ethylene Propylene Diene Monomer)

        - 40% Yellow, 40% Bright Green, 10% Pearl, %10 Teal
        - 50% Yellow, 40% Bright Green and 10% Light Grey
        - 50% Yellow and 50% Bright Green

    3) Color Surface D (Blue): This will be selected from one of the three colors physical mockups using EPDM (Ethylene Propylene Diene Monomer)

        - 33% Teal, 33% Sky Blue and 33% Royal Blue
        - 20% Light Gray, 30% Sky Blue and 50% Royal Blue
        - 20% Teal, 40% Sky Blue, 30% Royal Blue, 10% Pearl

6. Other approved manufacturers included need to match the basis of design colors.

    1) “Perma-Play 2-layer system” poured-in-place by Pro-Techs Surfacing, LLC www.pro-techssurfacing.com , 2072 Coon Rd, Akron, OH; Telephone: (330) 576-6058

2) Duraturf (Standard + Custom Colors) by Sports surface specialties, East Aurora, NY 14052 locally represented by Premier Park and Play, Contact Doug Knotts 617-244-3317

3) Playsites and Surfaces (Standard + Custom Colors), 908 Long Island Ave, Deer Park, NY 11729 Tel 631-392-0960

C. All colors shall be submitted by the contractor, and approved by Landscape Architect.

D. Materials shall not contain hazardous substances, such as toluene, lead, or mercury compounds or cadmium coloring pigments.

E. The finished surface shall be slip-resistant; supply ASTM-E-303 slip characteristic test results.

F. Material shall be ignition-resistant; supply passing ASTM-D 2859 test results.

G. Material shall be water-permeable, and wear and weather-resistant. Binders shall be low odor, and the aliphatic binder in the top surface shall be non-yellowing.

H. Binders utilizing latex or emulsion type binder will not be accepted. Pre-fabricated shock pads will also not be considered equal.

2.03 COLOR SURFACING FOR PAVEMENT PAINTED GRAPHICS

A. Provide and apply as shown on the drawings a high quality "vehicular rated" water-borne acrylic coating incorporating an epoxy additive to increase the wet abrasion resistance properties of the film. The product shall have the general specifications

1. Resist ultraviolet degradation for long-term protection and color stability
2. Provide durable, non-skid texture for exterior asphalt surface
3. Resist wear and abrasion through the incorporation of an epoxy additive
4. Protect against asphalt degradation by sealing in the vital oils of the asphalt mix
5. No toxic fumes or objectionable odor. Must meet VOC requirements

B. Basis of Design is product "STREETCOAT Epoxy Modified Resin, Traffic Coating" by Pattern Paving (www.patternpaving.com) or approved equal. Contact: Gerry Oliver (gerry@patternpaving.com ; 704-996-7248)

C. Approved Equal must meet the following composition and performance characteristics as described below and include custom RAL color within Contract Sum as needed to match the basis of design color specified.

1. Table 1: Material Composition

CHARACTERISTICS	REQUIREMENT
ASTM D2369 % Solids by weight	> 76%
ASTM D26297 % Solids by volume	> 57.9%
Weight per gallon	13.9 lbs/gal 6.3kg / 3.78 litre
ASTM D-3723 % Pigment by weight	> 62%
Boiling Range	212°F - 100°C
ASTM D-3278 Flash Point	>230°F - 110°C
Specific Gravity (H2O=1).....	1.67
Vapor Density	Heavier than air
Hazardous Ingredients	none
Mix Ratio (Coating : LiquidTint) gal/pints	5gal / 1pint 18.92 Litre / .473 Litre
Wet mil thickness per coat	10 to 15 thousands/inch
Minimum number of coats.....	3

Table 2: Performance Requirements

TEST	REQUIREMENT
Dry Time (to re-coat) @ 50°F (10°C).....	120 min
Dry Time (to re-coat) @ 90°F (32°C).....	30 min
85% Day Cure (to permit traffic) @ 80°F (26°C).....	2 hours
Gloss: ASTM D523 (85° Gardner).....	<3
Hardness: ASTM D3363	3H pencil
Shore Hardness: ASTM D2240	63 Type D
ASTM 2486 Gasoline Scrub Resistance..... To 50% of coating thickness (30 mils)……	>5000 cycles to max loss of 50% coating thickness
ASTM 2486 Motor Oil Scrub Resistance..... To 50% of coating thickness (30 mils)……	>5000 cycles to max loss of 50% coating thickness
Temp. limits for service (of cured material)	-35°F to 145°F -37°C to 63°C
ASTM G-155 Color Stability..... QUV 2,000 hrs (CIE units).....	Old Brick Color ΔE < .5
Pedestrian Friction ASTM E303 British Pendulum.....….	88 BPN Dry 72 BPN Wet
Mandrel Bend Test ASTM D522.....	>3/16" Pass >.476cm Pass
Water Absorption ASTM D570 7day.....	<9%
VOC Content ASTM D3960.....	<.67oz/1.06 qt <19 grams/liter
Taber Abrasion Dry H-10 ASTM D4060 1day cure.....	.006oz/1000cycles .17g/1000 cycles
Taber Abrasion Wet H-10 ASTM D4060 7day cure.....	.015oz/1000cycles .43g/1000 cycles
Adhesion to Asphalt ASTM D4541 >245 lb./sq.in.....	Cohesive Asphalt Failure prior to Adhesion Failure

D. Approved Equal must meet the following composition and performance characteristics as described above.

E. There will be minimum of 3 coats applied for all the color surfacing graphics

F. Color shall be Safety Blue.

PART 3 - EXECUTION

3.01 SUBBASE, EDGING AND DRAINAGE

A. Install edging system in accordance with the drawings and per the manufacturer's

recommendations. Install the subdrains as indicated on the Drawings. Install gravel base where indicated on the drawings and in accordance with Section 31 00 00 Excavation Filling and Grading

3.02 POURED-IN-PLACE RUBBER SAFETY SURFACE

A. Contractor shall provide copies of testing procedures and results, performed by an independent testing source, which demonstrate compliance with the CPSC and ASTM guidelines. Per CPSC and ASTM F-1292 Critical Height testing procedures at 30, 72, and 120 degrees F, the installed surface shall pass the 150 G-max and 850 HIC test for a height at least equal to the highest fall height of equipment as installed within its zone.

B. When installed, the system shall be handicapped-accessible and comply with the Civil Rights Restoration Act of 1987 and the Americans with Disabilities Act of 1990 (ADA). Surface must comply with Massachusetts Architectural Access Board accessibility requirements and ASTM F1951.

C. Contractor shall provide a written five (5) year performance guarantee from date of substantial completion. The manufacturer shall provide a written guarantee for three (3) years from date of installation against decay and biochemical degradation calling for replacement of defective materials during the guarantee period. Contractor shall install system so as to comply with manufacturers' warranty requirements.

D. Install material per manufacturer's specifications.

3.03 CLEANING, REPAIR AND PROTECTION

A. Repair minor damage to eliminate all evidence of repair. Remove and replace work that cannot be satisfactorily repaired.

B. Provide temporary protection to ensure that the work will be without dirt, stains, damage or deterioration at time of final acceptance. Clean up stains and spills as they occur. Remove protections and clean as necessary immediately before final acceptance.

C. Upon completion of the work and before acceptance, the Contractor shall remove and dispose of in an approved manner all surplus materials, rubbish, etc. which the Contractor may have accumulated during the course of the work and shall leave the site in a clean and orderly condition. The Contractor shall not abandon any material at or near the site regardless of whether or not it has any value.

END OF SECTION

SECTION 32 30 00
SITE IMPROVEMENTS

PART 1 - GENERAL

1.01 RELATED DOCUMENTS

A. This section is only a portion of the Contract Documents. All of the Contract Documents, including Conditions of the Contract and Division 1 General Requirements, apply to this section.

1.02 DESCRIPTION OF WORK

A. The work of this section includes, but is not limited, to the following:

1. Concrete Footings for all Site Improvement Items
2. Grading and Compaction of Sub-Base
3. Seating Stumps
4. Engineered Wood Fiber Surfacing

1.03 RELATED WORK

A. Carefully examine all the Contract Documents for requirements that affect the work of this Section. Other specification sections that directly relate to the work of this Section include, but are not limited to the following:

1. Section 03 30 00 – Cast-In-Place Concrete
2. Section 11 68 00 – Playground Equipment
3. Section 12 93 00 – Site Furnishings
4. Section 31 00 00 – Earthwork
5. Section 31 25 00 – Erosion and Sedimentation Controls
6. Section 32 13 13 –Concrete Pavements
7. Section 32 31 00 – Fencing
8. Section 33 40 00 – Storm Drainage Utilities

1.04 SUBMITTALS

A. Shop Drawings: Refer to individual site improvements for submittal requirements.

B. Provide manufacturer’s product material information and system performance data along with material and system samples for each item specified in this Section for the Landscape Architect’s review and approval prior to ordering materials.

C. The General Contractor shall verify by field inspection that all items within this section conform to the specified requirements and approved submittals prior to installation.

1.05 DELIVERY, STORAGE AND HANDLING

A. Deliver materials and products and provide adequate protection against damage. Handle in strict compliance with manufacturer instructions and recommendations and store off the ground. Protect from all possible damage including, but not limited to chipping, staining, cracking and other damage. Sequence deliveries to avoid delays, but minimize on-site storage.

1.06 COORDINATION

A. The work of this Section shall be coordinated with that of other trades affecting, or affected by, this work as necessary to assure the steady progress of the work of this Contract.

B. Substrates: Proceed with work only when substrate construction and penetrating work is complete.

1.07 GUARANTEE

A. In addition to the specific guarantee requirements of the GENERAL CONDITIONS and SUPPLEMENTARY GENERAL CONDITIONS, the Contractor shall provide the manufacturers' standard written warranty for each product within this specification. All of these guarantees shall be in addition to, and not in lieu of, other liabilities that the Contractor may have by law or other provisions of the Contract Documents.

PART 2 - PRODUCTS AND EXECUTION (Combined)

2.01 CONCRETE FOOTINGS FOR SITE IMPROVEMENT ITEMS

A. Construct concrete footings where shown on the Drawings.

B. Concrete for footings shall be 4,500 lb. concrete as specified in Section 03 30 00 CAST IN PLACE CONCRETE

C. Place concrete on moist subgrade or against prepared footings in continuous operation between transverse joints or individual sections. Vibrate all concrete. Do not place concrete in freezing temperatures or on frozen base

2.02 GRADING AND COMPACTION OF SUB-BASE

A. Do all necessary grading in addition to that specified under Section 31 20 00 – Earthwork to bring subgrade or foundation after final compaction to required grades and sections to obtain a foundation of uniform bearing surface. In absence of specific requirements, compact foundation by such means as will provide firm base and insurance against settlement of superimposed work.

B. Sub-base preparation, including material, shall be of properly approved quality as specified under Section 31 20 00 – Earthwork. Start of work under this Section shall constitute acceptance of the foundation conditions to which this work is to be applied. Any defects in work resulting from such conditions shall be corrected under this Section 32 30 00, Site Improvements, at no additional cost to the Owner.

2.03 SEATING STUMPS

B. Provide sawn wood stumps cut cleanly and perpendicular to the trunk as shown in the drawings. Wood shall be a min. grade 2 black locust. Remove thorns and bark from logs and stumps.. Landscape Architect shall approve stumps in field before installation. Stumps shall be sanded smooth and shall be free of any sharp edges.

C. Sitting stumps area shall be backfilled with freely-draining, compacted gravel at the minimum depth indicated on the Drawings or at greater depth as required to hold them securely in place.

2.04 ENGINEERED WOOD FIBER SAFETY SURFACING

A. Furnish and install Engineered Wood Fiber Surfacing as indicated in the drawings and specified herein.

B. Material shall be IPEMA certified, mix of random-sized engineered shredded wood fibers. Standard wood chips or bark mulch will not be acceptable. Wood fiber shall have no twigs, bark, leaf debris or other organic material incorporated within.

C. Provide sufficient amount of material to allow for compaction to depths indicated on the plans/details and as per manufacturer's recommendations.

D. Filter fabric shall be provided that is 100% polyester, nonwoven, engineering geotextile fabric,

Mirafi 140N or equal. Provide 12" overlap on all seams.

E. Wood Fiber Surfacing shall be installed in accordance with the drawings and compacted to the manufacturer's recommendations.

2.05 CLEANING, REPAIR AND PROTECTION

A. Repair minor damage to eliminate all evidence of repair. Remove and replace work that cannot be satisfactorily repaired.

B. Provide temporary protection to ensure that the work will be without dirt, stains, damage or deterioration at time of final acceptance. Clean up stains and spills as they occur. Remove protections and clean as necessary immediately before final acceptance.

C. Upon completion of the work and before acceptance, the Contractor shall remove and dispose of in an approved manner all surplus materials, rubbish, etc. which the Contractor may have accumulated during the course of the work and shall leave the site in a clean and orderly condition. The Contractor shall not abandon any material at or near the site regardless of whether or not it has any value.

END OF SECTION

SECTION 32 31 00
FENCING

PART 1 - GENERAL

1.01 RELATED DOCUMENTS

A. All of the Contract Documents, including General and Supplementary Conditions and Division 1 apply to the work of this Section.

1.02 DESCRIPTION OF WORK

A. The work of this Section includes, but is not limited to the following:

1. Grading and Compaction of Sub-base
2. Concrete Footings for Fencing
3. Wire Mesh Fence and Gates
4. Gate Latch
5. Cleaning, Repair and Protection

1.03 RELATED WORK

A. Carefully examine all of the Contract Documents for requirements that affect the work of this Section. Other specification sections that directly relate to the work of this Section include, but are not limited to, the following:

1. Section 024113 – Site Preparation
2. Section 033000 – Cast-in-Place Concrete
3. Section 312000 - Earthwork
4. Section 323000 – Site Improvements
5. Section 321313 – Concrete Pavements

1.04 SUBMITTALS

A. Refer to individual site improvements for additional submittal requirements.

B. Provide manufacturer’s product material information and system performance data along with material and system samples for each item specified in this Section for the Landscape Architect’s review and approval prior to ordering materials.

C. The General Contractor shall verify by field inspection that all items within this section conform to the specified requirements and approved submittals prior to installation.

1.05 DELIVERY, STORAGE AND HANDLING

A. Deliver materials and products adequately protected against damage. Handle in strict compliance with manufacturer’s instructions and recommendations and store off the ground. Protect from all possible damage including, but not limited to, chipping, staining, cracking and other damage. Cracked, chipped, or stained units will be rejected and shall not be utilized in this work. Sequence deliveries to avoid delays, but minimize on-site storage.

1.06 COORDINATION

A. The work of this Section shall be coordinated with that of other trades affecting, or affected by, this work as necessary to assure the steady progress of the work of this Contract.

B. Substrates: Proceed with work only when substrate construction and penetrating work is complete.

1.07 REFERENCE STANDARDS

A. American Society of Testing and Materials (ASTM)

1. A121 Specification for Metallic-Coated Carbon steel Barbed Wire
2. A123 Standard Specification for Zinc (Hot-Dip Galvanized) Coatings on Iron and Steel Products
3. A307 Standard Specification for Carbon Steel Bolts and Studs, 60,000 PSI Tensile Strength
4. A500 Standard Specification for Welded and Seamless Carbon Steel Structural Tubing in Rounds and Shapes
5. A653/A653M Standard Specification for Steel Sheet, Zinc-Coated (Galvanized) or Zinc-Iron Alloy Coated (Galvannealed) by the Hot-Dip Process
6. A1011 Specification for Steel, Sheet and Strip, Hot-Rolled, Carbon Structural High Strength Low Alloy with Improved Formability
7. B117 Practice for Operating Salt-Spray (Fog) Apparatus
8. F900 Specification for Industrial and Commercial Swing Gates
9. F1184 Specification for Industrial and Commercial Horizontal Slide Gates
10. F2200 Specification for Automated Vehicular Gate Construction
11. F2453/F 2453M – Standard Specification for Welded Wire Mesh Fence Fabric

1.08 GUARANTEE

A. In addition to the specific guarantee requirements of the GENERAL CONDITIONS and SUPPLEMENTARY GENERAL CONDITIONS, the Contractor shall provide the manufacturers' standard written warranty for each product within this specification. All of these guarantees shall be in addition to, and not in lieu of, other liabilities that the Contractor may have by law or other provisions of the Contract Documents.

PART 2 - PRODUCTS & EXECUTION (Combined)

2.01 GRADING AND COMPACTION OF SUB-BASE

A. Do all necessary grading in addition to that specified under Section 312000 – Earthwork to bring subgrade or foundation after final compaction to required grades and sections to obtain a foundation of uniform bearing surface. In absence of specific requirements, compact foundation by such means as will provide firm base and insurance against settlement of superimposed work.

B. Sub-base preparation, including material, shall be of properly approved quality as specified under Section 312000 - EARTHWORK. Start of work under this Section shall constitute acceptance of the foundation conditions to which this work is to be applied. Any defects in work resulting from such conditions shall be corrected under this Section, at no additional cost to the Owner.

2.02 CONCRETE FOOTINGS FOR FENCING ITEMS

A. Construct concrete footings where shown on the Drawings.

B. Concrete for footings shall be 4,000 lb. concrete as specified in Section 03 30 00 –CAST-IN-PLACE CONCRETE.

C. Place concrete on moist subgrade or against prepared footings in continuous operation between transverse joints or individual sections. Vibrate all concrete. Do not place concrete in freezing temperatures or on frozen base.

2.03 WIRE MESH FENCE AND GATE

A. Wire Mesh Fence and Gate shall be a complete system of components designed specifically to coordinate together sourced from a single manufacturer and meeting the performance requirements specified herein and the layout and details indicated in the drawings.

B. Approved Manufacturers

1. The basis of design for the Wire Mesh Fencing and Gates is Amiguard 5500 Mesh by AMICO Security (https://amicosecurity.com/amiguard-5000-series) Contact: Michael Andrews (864.322.3053 mandrews@amicosecurity.com)
2. "Secure Double Wire" by Omega Fence Systems (www.omegafence.com) Contact: Patti Rocco (732-431-2089 patti@johroccosales.com) or approved equal.
3. Approved Equal

C. General Specifications

1. The fence shall be 6 feet in height
2. Wire diameter – Vertical Wires 0.22 +/- 0.003 (4ga), Horizontal Double Wires 0.30 +/- 0.003 (0ga)
3. Mesh Opening –1.97in width x 7.97in height
4. Framework shall utilize minimum tensile strength 50,000 psi structural tube for posts. Posts shall be 3x2-in x 0.188in.
5. Fence panels shall be fitted so that they are attached to the face of the post such that any force against the panel is transferred to the post and utilize secure, pressed steel brackets. Standard bracket collars will not be accepted. Submit shop drawing details and samples of connector brackets for review and approval.
6. Double swing gate shall have an opening of 10' with a lockable latch and cane bolt. Gate frames shall be of a welded construction with heavy duty hinges provided by the fence manufacturer, and designed to operate under the added weight of the specified high security mesh panels and wind loading. The high security mesh fabric shall fit flush on all sides of the gate frame allowing no open spaces between the fabric and the gate frame.
    1) Provide manufacturer's information for lockable gate latch. Latch must prevent pinch factors and meet ADA requirements.
7. All the hardware and panel fitting shall be tamper proof, with lock washers to prevent loosing of attachment items and wear resistance.
8. Color and finish: All fence and gate components including hardware shall be hot-dip galvanized with zinc mass greater than 0.13 oz/sf and a 4 mil. polyester powder coat in high gloss black. Finish shall pass ASTM B117 Salt Spray Test.

D. Submittals

1. Shop Drawings: Supply shop drawings at an approved scale for location, installation and erection of all components of the fence and gates.
2. Product information: Provide manufacturer's product data showing installation and limitations in use. Supply Certificates of Compliance for all materials required for fabrication and installation.
3. Submit material samples from sources other than approved manufacturers in order to

be evaluated for equivalency to basis of design. Submit samples showing the material size, gauge and finish for all components required for construction, including but not limited to:

a) A 12”x12” sample of fence fabric.

b) A 12” section of fence post.

c) Provide 1 of each type of fitting required.

d) Provide 1 gate latch and 1 gate hinge (to be returned to the fence contractor to be used with the installation).

E. Installation

1. Installation and layout of the job shall be approved by the landscape architect prior to installation.
2. The fence shall be completely installed according to the drawings and specifications.
3. Posts shall be set in 4,500 psi concrete.
4. Approved fasteners shall be used to install mesh.
5. Fence post spacing shall be set in accordance with the contract documents.
6. Fabric shall be installed so that the bottom of panels is no more than 2-in above grade. Top of panels shall be level and conforming to grade. Wire picket extensions shall be along the bottom of the fence panels.
7. Gates shall be installed so that the bottom maintains a minimum clearance of one (1) inch above the pavement.
8. The gate is to swing or roll freely throughout the entire gate range of motion.

2.04 CLEANING, REPAIR AND PROTECTION

A. Straighten and refurbish existing poles as needed.

B. Repair minor damage to eliminate all evidence of repair. Remove and replace work that cannot be satisfactorily repaired.

C. Provide temporary protection to ensure that the work will be without dirt, stains, damage or deterioration at time of final acceptance. Clean up stains and spills as they occur. Remove protections and clean as necessary immediately before final acceptance.

D. Upon completion of the work and before acceptance, the Contractor shall remove and dispose of in an approved manner all surplus materials, rubbish, etc. which the Contractor may have accumulated during the course of the work and shall leave the site in a clean and orderly condition. The Contractor shall not abandon any material at or near the site regardless of whether or not it has any value.

END OF SECTION

APPENDIX A

INSTALLATION INSTRUCTIONS FOR OWNER-SUPPLIED PLAY EQUIPMENT AND FURNISHINGS

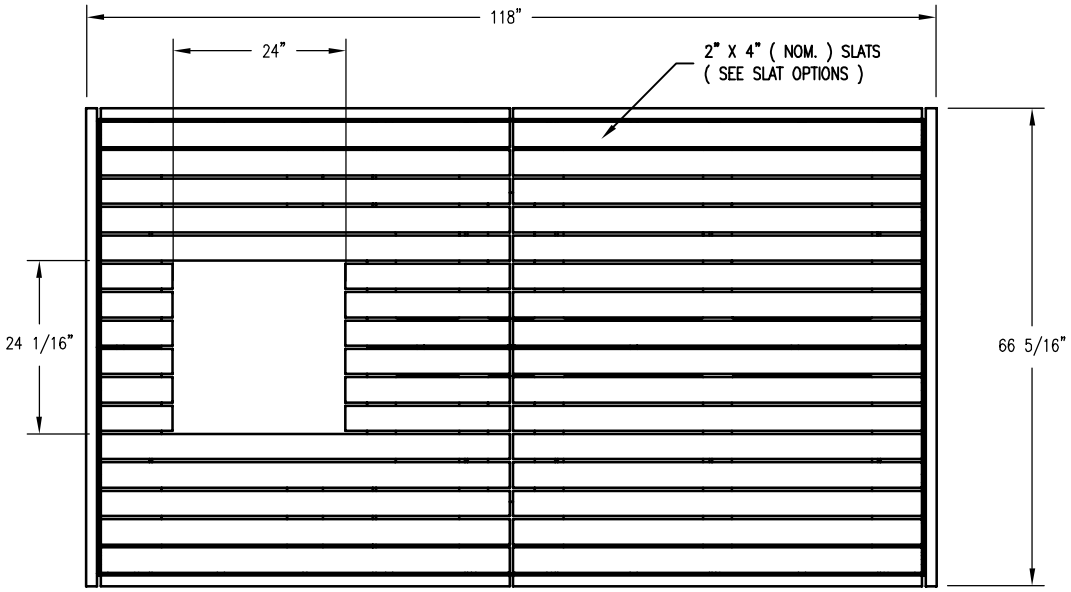

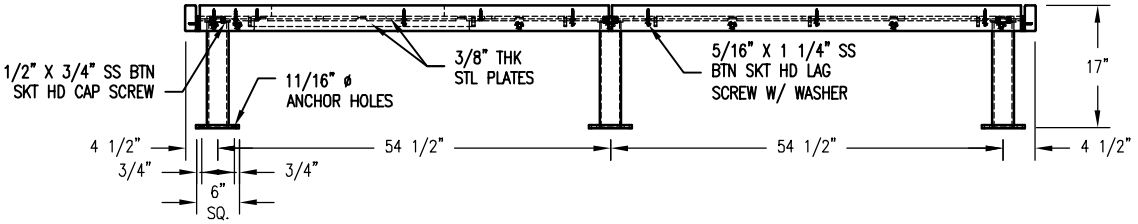

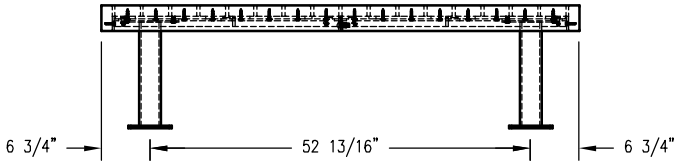

SLAT OPTIONS

- ☐ ANTIQUE MAHOGANY TEXTURED
- ☐ BRAZILIAN WALNUT TEXTURED
- ☐ OTHER _____

NOTES

1.) ALL STL. MEMBERS COATED W/ ZINC RICH EPOXY THEN FINISHED W/ POLYESTER POWDER COATING.

2.) 1/2" X 3 3/4" EXPANSION ANCHOR BOLTS PROVIDED.

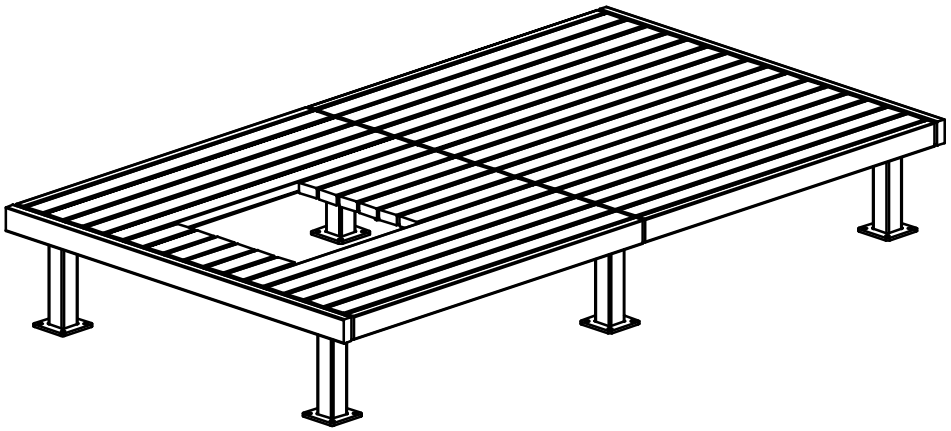

DuMor, inc.	BENCH	DATE DRAWN : 02/28/20 DRAWN BY : ESS DATE REV. : REV. BY :	REV. A	DRAWING NUMBER 6A-524TX	SHEET 1 OF 3

NOTES:

1.) DURING ASSEMBLY PROCEDURE; DO NOT COMPLETELY TIGHTEN HARDWARE.
2.) THE ACTUAL PARTS WILL NOT BE NUMBERED. NUMBERS ONLY APPLY TO DRAWING.
3.) UPON COMPLETION OF ASSEMBLY SQUARE ALL COMPONENTS THEN TIGHTEN ALL HARDWARE.
4.) MOUNT AND ANCHOR AS SPECIFIED.

TOOLS REQ'D

3/4" WRENCH
5/16" ALLEN WRENCH
1/4" ALLEN WRENCH
1/2" MASONRY DRILL BIT
DRILL

(1) ATTACH 2 FRAMES TOGETHER, ATTACH SUPPORTS THROUGH TAPPED HOLES IN FRAMES.

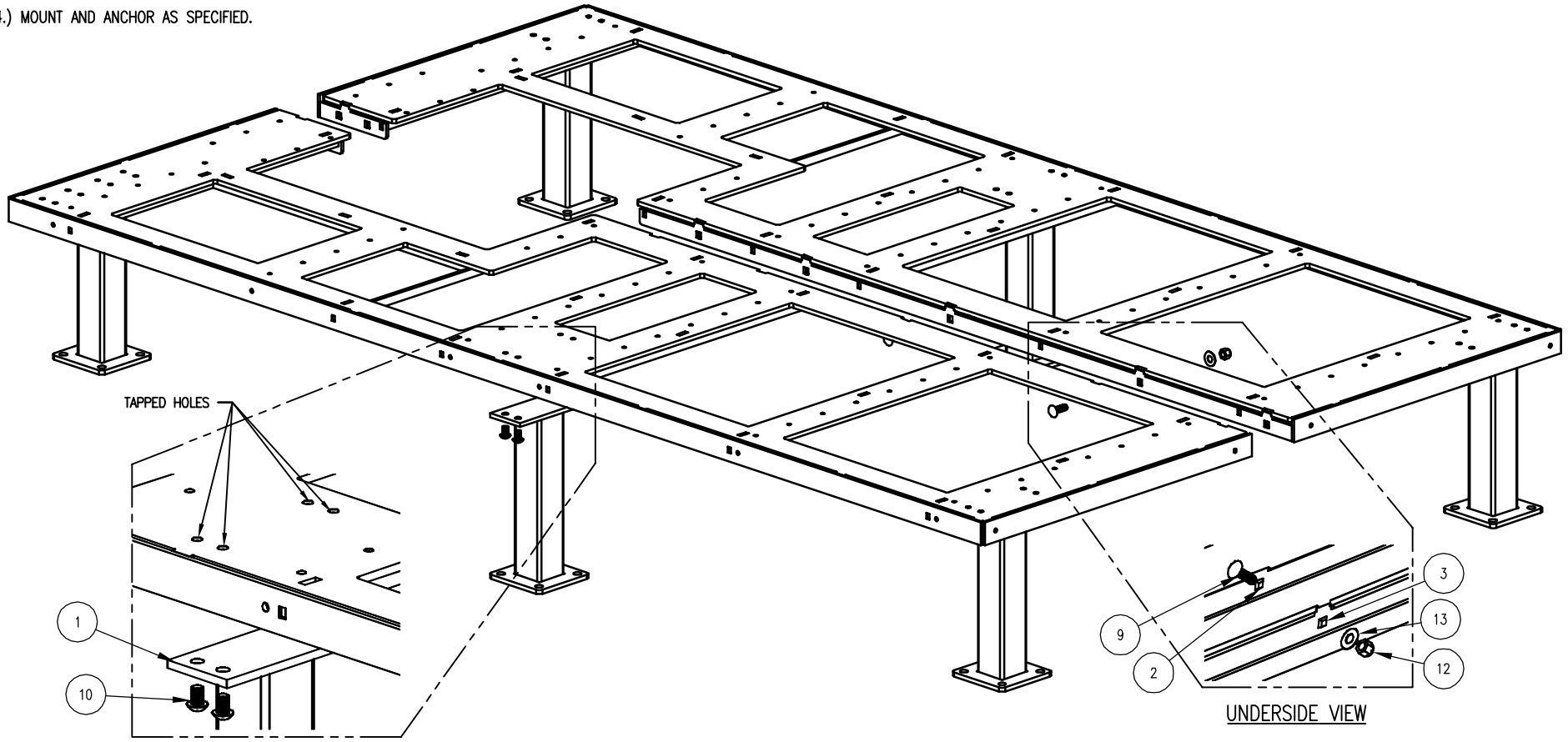

UNDERSIDE VIEW

KITS PROVIDED

ITEM	QTY	PART NO	DESCRIPTION
15	6	K-ANC0860-4	1/2" X 3 3/4" SS ANCHOR KIT (4PC)
16	6	K-BC0812-4	1/2" CAP HARDWARE KIT (4PC)
17	4	K-BL0524-30	5/16" LAG HARDWARE KIT (30PC)
18	2	K-CG0824-4L	1/2" CGE BOLT HARDWARE KIT (4)

PARTS LIST

ITEM	QTY	PART NO	DESCRIPTION
1	6	0-A524-01/S-2	SUPPORT FOR SURFACE MOUNT
2	1	0-A524L-02	LEFT STL SEAT FRAME
3	1	0-A524R-02	RIGHT STL SEAT FRAME
9	7	1-11-042	1/2" X 1 1/2" SS CGE BOLT
10	24	1-12-098	1/2" X 3/4" SS BTN SKT HD CAP SCR
12	7	1-20-015	1/2" SS NYLON LOCKNUT
13	7	1-22-015	1/2" SS FLAT WASHER

DuMor, inc.

ASSEMBLY INSTRUCTIONS

DATE DRAWN : 02/09/21
DRAWN BY : ESS
DATE REV. :
REV. BY :

REV. A

DRAWING NUMBER 6A-524TX

NOTES:

1.) DURING ASSEMBLY PROCEDURE;
DO NOT COMPLETELY TIGHTEN HARDWARE.
2.) THE ACTUAL PARTS WILL NOT BE NUMBERED.
NUMBERS ONLY APPLY TO DRAWING.
3.) UPON COMPLETION OF ASSEMBLY SQUARE
ALL COMPONENTS THEN TIGHTEN ALL HARDWARE.
4.) MOUNT AND ANCHOR AS SPECIFIED.

TOOLS REQ'D

3/4" WRENCH
5/16" ALLEN WRENCH
1/4" ALLEN WRENCH
1/2" MASONRY DRILL BIT
DRILL

(2) ATTACH SLATS TO STEP 1.

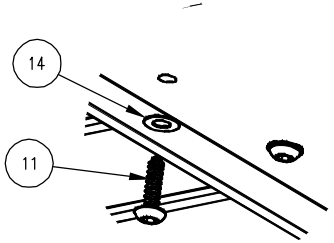

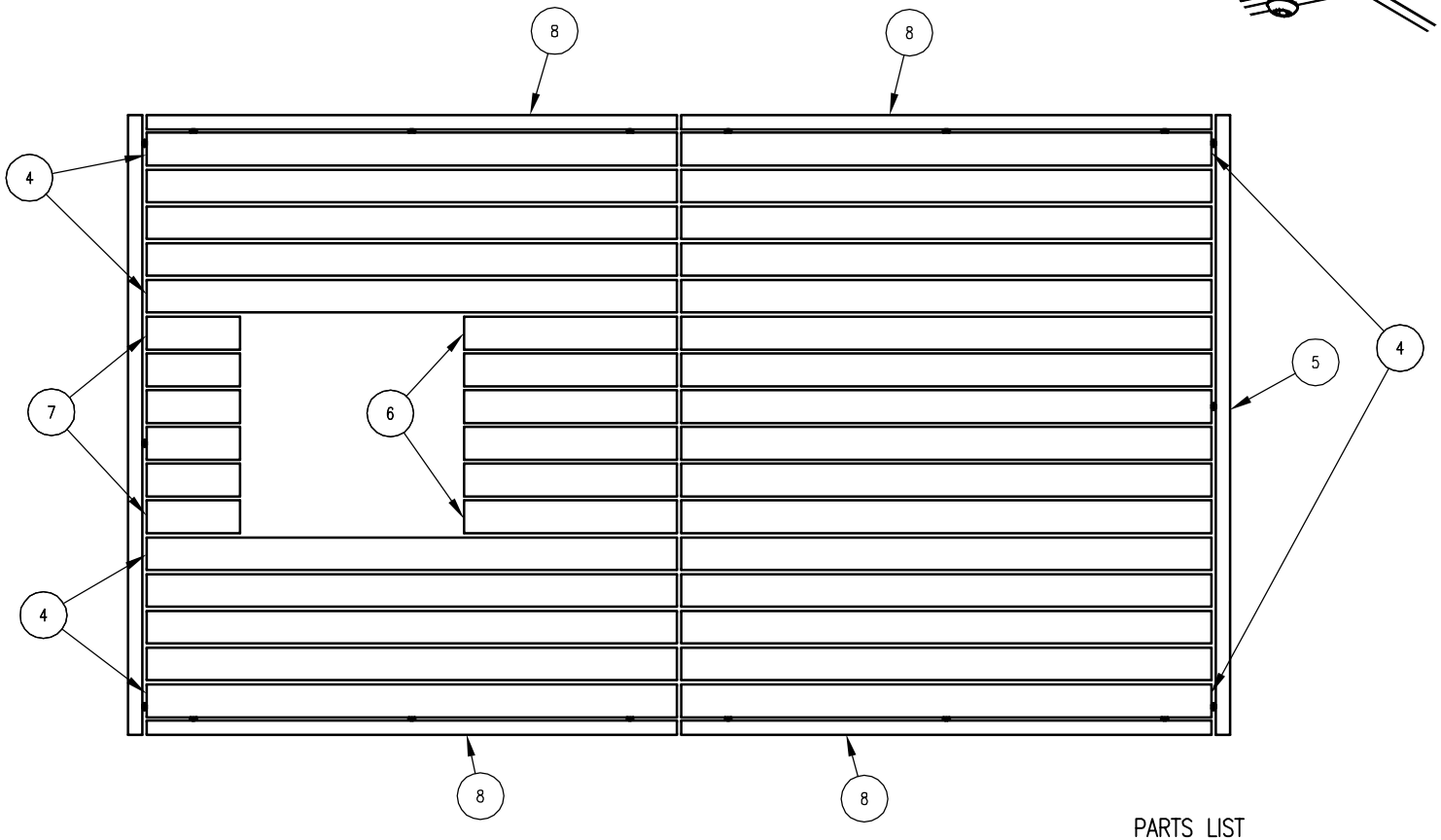

KITS PROVIDED

ITEM	QTY	PART NO	DESCRIPTION
15	6	K-ANC0860-4	1/2" X 3 3/4" SS ANCHOR KIT (4PC)
16	6	K-BC0812-4	1/2" CAP HARDWARE KIT (4PC)
17	4	K-BL0524-30	5/16" LAG HARDWARE KIT (30PC)
18	2	K-CG0824-4L	1/2" CGE BOLT HARDWARE KIT (4)

PARTS LIST

ITEM	QTY	PART NO	DESCRIPTION
4	26	0-A524TX-03	2" X 4" X 56 3/4" INT'R SLAT, TX
5	2	0-A524TX-04	2" X 4" X 66 5/16" EDGE SLAT, TX
6	6	0-A524TX-05	2" X 4" X 22 3/4" INT'R SLAT, TX
7	6	0-A524TX-06	2" X 4" X 10" INT'R SLAT, TX
8	4	0-A524TX-07	2" X 4" X 56 3/4" EDGE SLAT, TX
11	120	1-13-023	5/16" X 1 1/4" SS BTN SKT HD LAG
14	120	1-22-017	5/16" SS FLAT WASHER

DuMor, inc.

ASSEMBLY INSTRUCTIONS

DATE DRAWN : 02/09/21
DRAWN BY : ESS
DATE REV. :
REV. BY :

REV. A

DRAWING NUMBER 6A-524TX

SHEET 3 OF 3

Notes:
1. Custom Boppity Bridge, Wee Planet Climber and 2nd Saddle Swing not shown.
2. Swings shall have single post.





landscape structures

HEALEY TOT LOT

MEO20156 • 03.18.2020

O'BRIEN & SONS
ELEMENTS FOR A GREAT OUTDOORS

©2020 Landscape Structures. All Rights Reserved.

Notes:
1. Custom Boppity Bridge, Wee Planet Climber and 2nd Saddle Swing not shown.
2. Swings shall have single post.









landscape structures

HEALEY TOT LOT

MEO20156 • 03.18.2020

O'BRIEN & SONS
ELEMENTS FOR A GREAT OUTDOORS

©2020 Landscape Structures. All Rights Reserved.

landscape structures®

ISO 14001 CERTIFIED

ISO 9001 Certified

SAFETY NOTE

Choose a protective surfacing material that has a Critical Height Value of at least the height of the Highest Accessible Part/Fall Height of the adjacent equipment. (Ref. ASTM F1487.)

20759100

PLAN VIEW/ FOOTING LAYOUT

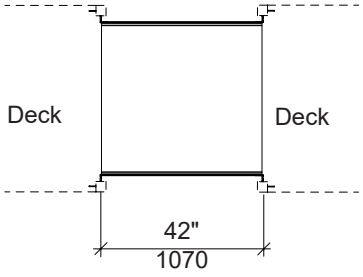

DETAIL

NOTE: Attachment Brackets need to be flush with post flanges.

NOTE: Shown without panel on this side for installation clarity.

DETAIL

PlayShaper® 111348 Arch Bridge, 42"

601 7TH STREET SOUTH, DELANO, MINNESOTA 55328-8605 888-574-4678 LSI Install Help 888-438-6574 LSI Direct 763-972-5200 Int. FAX (763) 972-3185

© 2019 by Landscape Structures. All rights reserved.

PlayShaper® 111348 Arch Bridge, 42"

Parts List

Part#	Description	Qty.
111796	Attachment Bracket, Specify Color	4
134945	Arch Bridge Deck, Specify Color	1
145506	Arch Bridge Panel, Specify Color	2
207592	**Hardware Package**	1
100195	3/8" x 5/8" BHCS w/Pin, SST	24
100198	3/8" x 1 1/8" BHCS w/Pin, SST	8
100327	3/8" Standard Hex Nut, SST	20
100365	3/8" SAE Flat Washer, SST	36
100353	3/8" Flange Nut w/Pin, SST	12
100362	3/8" Flat Washer, SST	16

Specifications

Bridge Deck: Fabricated from 12 GA (.105") sheet steel conforming to ASTM A1011. Standing surface is perforated with 5/16" diameter holes. Finish: TenderTuff™, color specified.

Panels: Permalene® panel measures 41" wide x 34 15/16" high, color specified.

Attachment Brkt: Fabricated from 1/8" x 1 1/4" x 2" 6061-T6 aluminum angle. Finish: ProShield®, color specified.

Fasteners: Primary fasteners shall be socketed and pinned tamperproof in design, stainless steel (SST) per ASTM F 879 unless otherwise indicated (see specific product installation/specifications).

Installation Time: Approx. 1 man hour

Weight: 130 lbs.

Installation Instructions

1) With mainstructures in position, attach arch bridge to face of decks using 3/8" x 1 1/8" BHCS w/pin with 3/8" flat washers (large) and 3/8" standard hex nuts with 3/8" flat washers (large). See Detail.

2) Attach brackets to post flanges in position shown using 3/8" x 5/8" BHCS w/pin with 3/8" SAE flat washers (small) and 3/8" standard hex nuts with 3/8" SAE flat washers (small).

3) Attach panels to brackets in position shown using 3/8" x 5/8" BHCS w/pin with 3/8" SAE flat washers (small) and 3/8" flange nuts w/pin.

4) Install protective surfacing before users are allowed to play on the structure.

Specifications are subject to change without notice.

Eco #0100266 Document #20759100 replaces #17030000. Made changes to hardware package.

landscape structures®

ISO 14001 CERTIFIED

ISO 9001 Certified

SAFETY NOTE

Choose a protective surfacing material that has a Critical Height Value of at least the height of the Highest Accessible Part/Fall Height of the adjacent equipment. (Ref. ASTM F1487.)

14548500

PLAN VIEW/ FOOTING LAYOUT

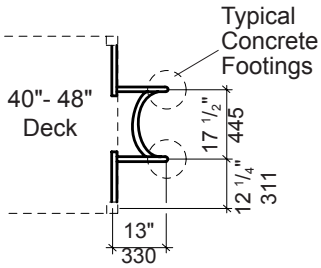

ELEVATION

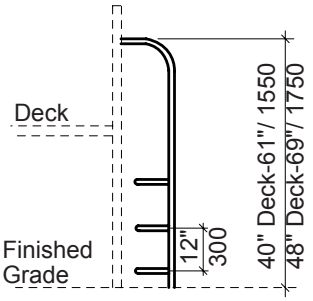

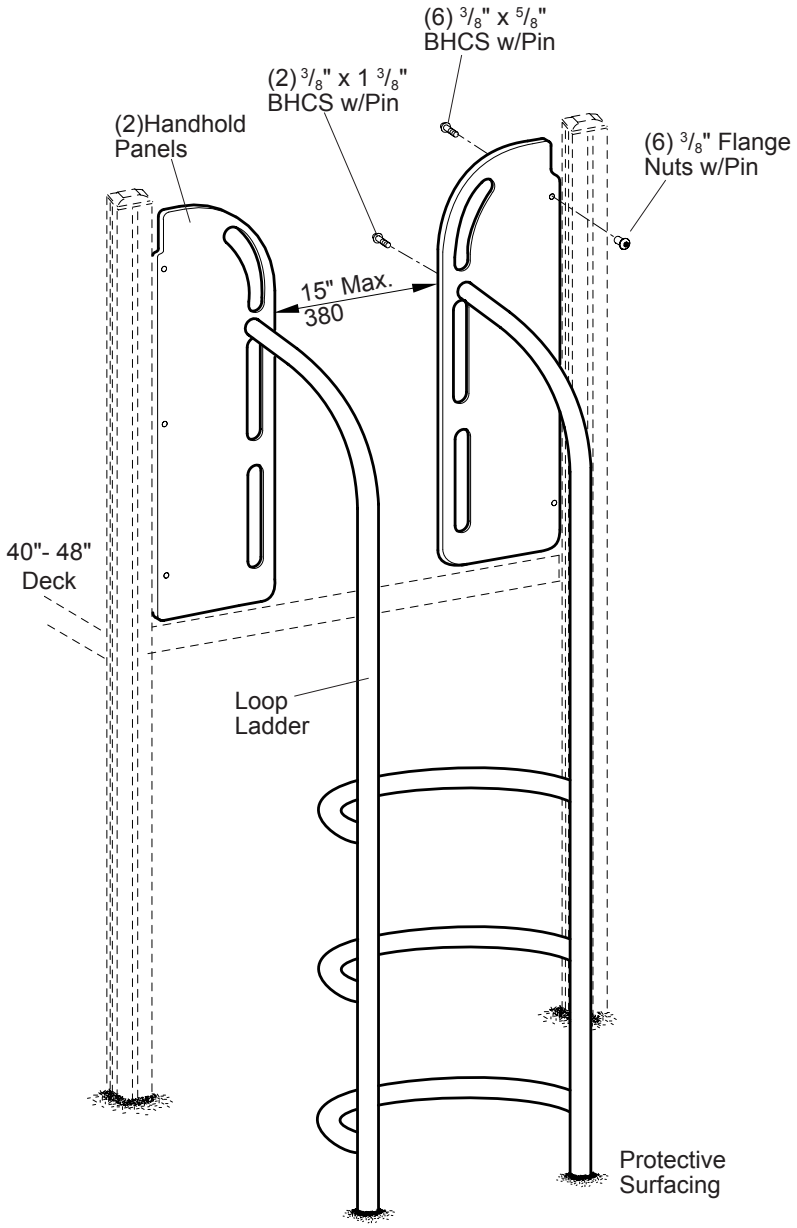

DETAIL
SURFACE MOUNT

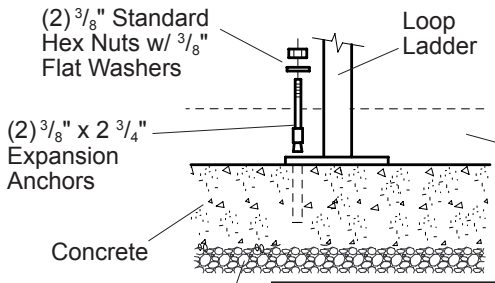

NOTE: Sufficient protective surfacing must cover hardware to satisfy fall height requirements.

DETAIL
DIRECT BURY

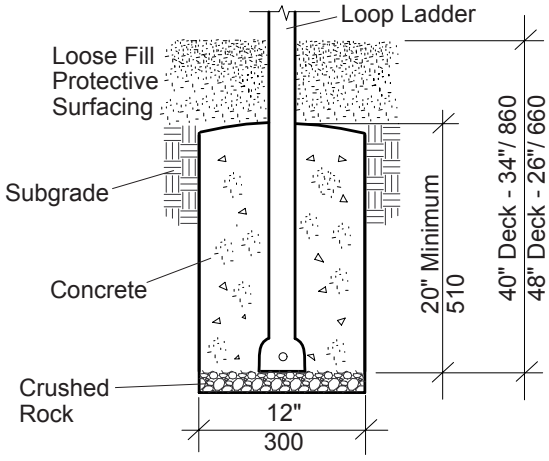

PlayShaper® 111364 Loop Ladder, 40"- 48"

601 7TH STREET SOUTH, DELANO, MINNESOTA 55328-8605 888-574-4678 LSI Install Help 888-438-6574 LSI Direct 763-972-5200 Int. FAX (763) 972-3185

© 2003 by Landscape Structures. All rights reserved.

PlayShaper® 111364 Loop Ladder, 40"- 48"

Parts List

Part#	Description	Qty.
113558	Loop Ladder (40" & 48"), DB, Specify Color	1
112913	Loop Ladder 40", SM, Specify Color	1
113567	Loop Ladder 48", SM, Specify Color	1
145466	Handhold Panel, Specify Color	2
121264	**Loop Ladder, Hardware Package**	1
113027	$^3/_8$" x 1 $^3/_8$" BHCS w/Pin, SST	2
100195	$^3/_8$" x $^5/_8$" BHCS w/Pin, SST	6
100353	$^3/_8$" Flange Nut w/Pin, SST	6
121256	**2-Hole (SM) Hardware Package**	1
100263	$^3/_8$" x 2 $^3/_4$" Expansion Anchor	2
100327	$^3/_8$" Standard Hex Nut, SST	2
100365	$^3/_8$" SAE Flat Washer, SST	2

DB = Direct Bury
SM = Surface Mount

Specifications

Loop Ladder: Weldment comprised of 1.125" O.D. 11 GA (.120") black steel tubing. Finish: TenderTuff®, color specified.

Handhold Panel: Solid color Permalene®, color specified.

Fasteners: Primary fasteners shall be socketed and pinned tamperproof in design, stainless steel (SST) per ASTM F 879 unless otherwise indicated (see specific product installation/specifications).

Installation Time: Approx. 1 man hour
Concrete Req: **26"** - Approx. 2.6 cu. ft.
34" - Approx. 3 cu. ft.
Weight: (40" & 48") **DB** - 59 lbs.
40" SM - 52 lbs.
48" SM - 56 lbs.
Fall Height: 40" (1,02 m)
48" (1,22 m)

Installation Instructions

Direct Bury

1) Dig footings spaced as shown.
2) Attach handhold panels to post flanges using $^3/_8$" x $^5/_8$" BHCS w/pin with $^3/_8$" flange nuts w/pin.
3) Using a $^7/_{16}$" drill bit, drill out the two $^1/_8$" pilot holes in each handhold panel for attachment of loop ladder.
4) Position loop ladder in footing holes and line up holes in loop ladder with drilled holes in handhold panels. Attach to handhold panels using $^3/_8$" x 1 $^3/_8$" BHCS w/pin.
5) With ladder side rails plumb, pour concrete footings. Allow concrete footings to cure a minimum of 72 hours before users are allowed to play on the structure.
6) Install protective surfacing before users are allowed to play on the structure.

Surface Mount

1) Attach handhold panels to post flanges using $^3/_8$" x $^5/_8$" BHCS w/pin with $^3/_8$" flange nuts w/pin.
2) Using a $^7/_{16}$" drill bit, drill out the two $^1/_8$" pilot holes in each handhold panel for attachment of loop ladder.
3) Position loop ladder in footing holes and line up holes in loop ladder with drilled holes in handhold panels. Attach to handhold panels using $^3/_8$" x 1 $^3/_8$" BHCS w/pin.
4) With ladder side rails plumb, drill through holes in footer plate 3" deep into concrete slab using $^3/_8$" masonry bit.
5) Tap $^3/_8$" x 2 $^3/_4$" expansion anchors through footer plate holes and into concrete. Secure with $^3/_8$" SAE flat washers and $^3/_8$" standard hex nuts screwed down tight.
6) Install protective surfacing before users are allowed to play on the structure.

Specifications are subject to change without notice.

Eco #52240 Document #14548500 replaces #12974800. Replaced handhold panels.

landscape structures®

ISO 14001 CERTIFIED

ISO 9001 Certified

SAFETY NOTE

Choose a protective surfacing material that has a Critical Height Value of at least the height of the Highest Accessible Part/Fall Height of the adjacent equipment. (Ref. ASTM F1487.)

14899900

PLAN VIEW
FOOTING LAYOUT

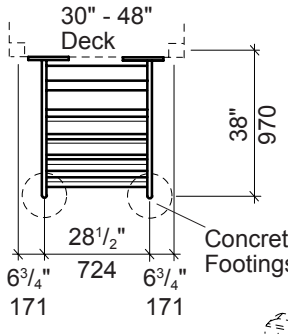

DETAIL
PANEL BRACKET

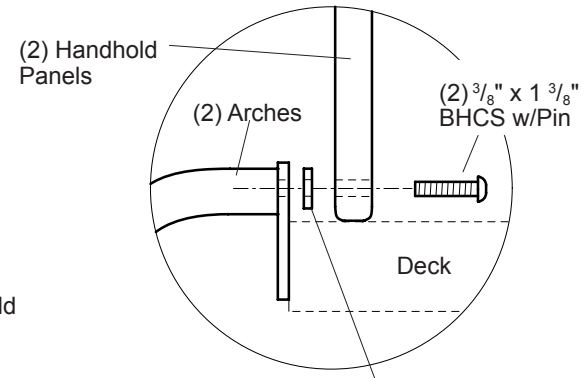

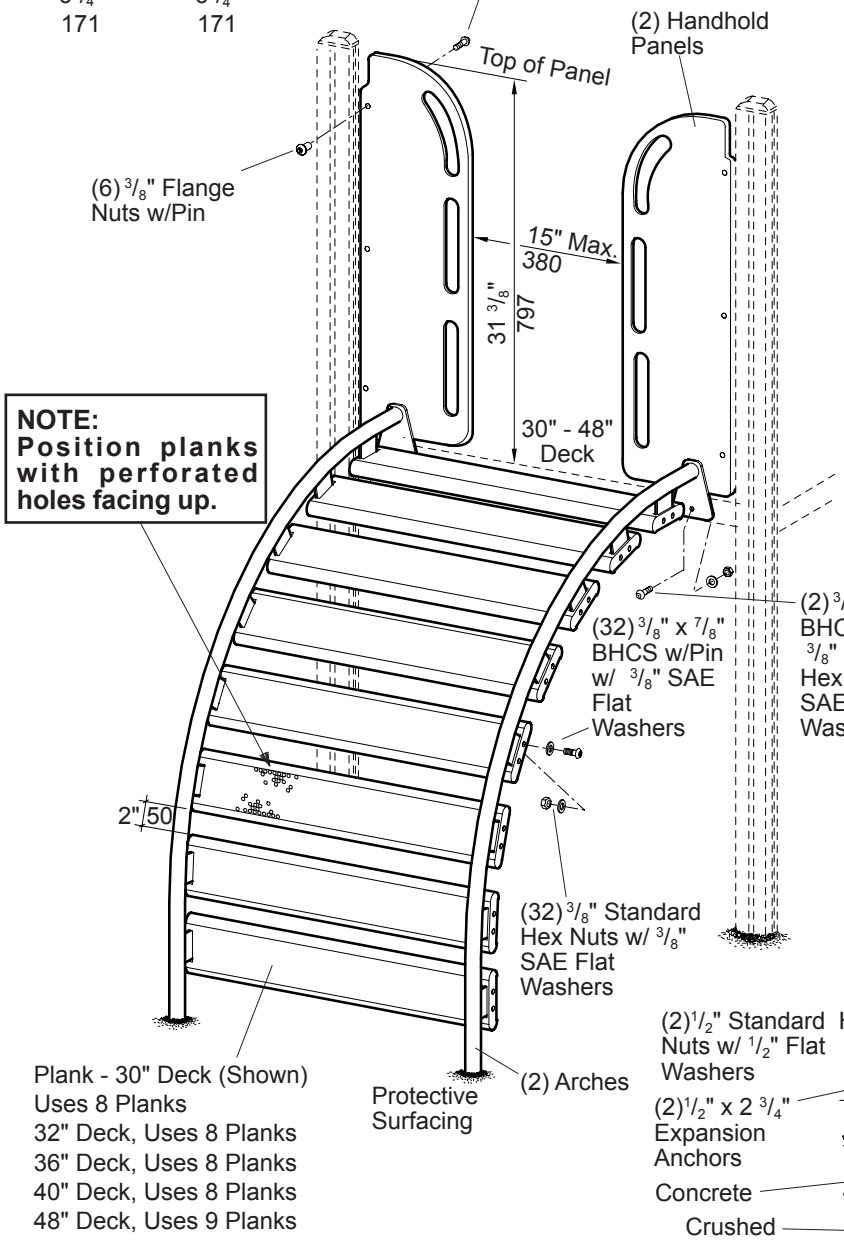

NOTE:
Position planks with perforated holes facing up.

SECTION
DIRECT BURY

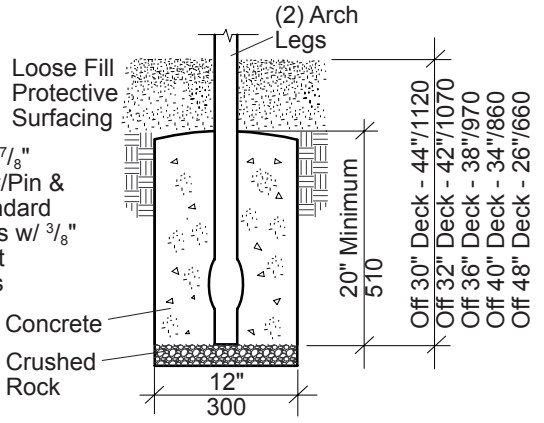

SECTION
SURFACE MOUNT

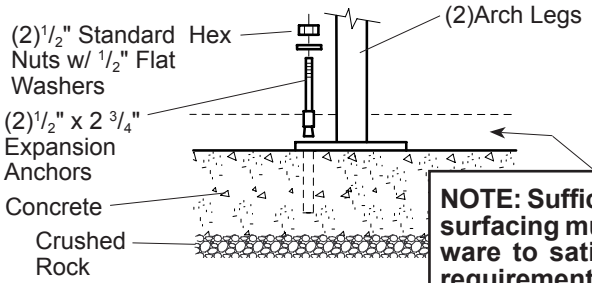

NOTE: Sufficient protective surfacing must cover hardware to satisfy fall height requirements.

PlayShaper® 132023 Cozy Climber™, 30"-48"

601 7TH STREET SOUTH, DELANO, MINNESOTA 55328-8605 888-574-4678 LSI Install Help 888-438-6574 LSI Direct 763-972-5200 Int. FAX (763) 972-3185

© 2004 by Landscape Structures. All rights reserved.

landscape structures®

PlayShaper® 132023 Cozy Climber™, 30"-48"

Parts List

Part#	Description	Qty.
114190	40" Arch, Specify Color, (SM)	2
113255	30" - 40" Arch, Specify Color, (DB)	2
114188	48" Arch, Specify Color, (SM)	2
113613	48" Arch, Specify Color, (DB)	2
113226	Plank, 30" - 40" Cozy Climber, Specify Color	8
113226	Plank, 48" Cozy Climber, Specify Color	9
145466	Handhold Panel, Specify Color	2
106480	**Handhold Hardware Package**	1
100195	3/8" x 5/8" BHCS w/Pin, SST	6
100353	3/8" Flange Nut w/Pin, SST	6
141325	**30" - 40" Cozy Climber Hardware Package**	1
100196	3/8" x 7/8" BHCS w/Pin, SST	34
100327	3/8" Standard Hex Nut, SST	34
100365	3/8" SAE Flat Washer, SST	66
113027	3/8" x 1 3/8" BHCS w/Pin, SST	2
140982	Spacer, AL.	2
141326	**48" Cozy Climber Hardware Package**	1
100196	3/8" x 7/8" BHCS w/Pin, SST	38
100327	3/8" Standard Hex Nut, SST	38
100365	3/8" SAE Flat Washer, SST	74
113027	3/8" x 1 3/8" BHCS w/Pin, SST	2
140982	Spacer, AL.	2
111392	**2-Hole (SM) Hardware Package**	1
100266	1/2" x 2 3/4" Expansion Anchor	2
100322	1/2" Standard Hex Nut, SST	2
100363	1/2" Flat Washer, SST	2

DB = Direct Bury
SM = Surface Mount

Specifications

Arch: Weldment comprised of 1.315" O.D. RS-20 (.080" - .090") galvanized steel tubing and 3/16" x 2 1/2" x 2 3/4" flat steel plates. Finish: ProShield®, color specified.

Plank: Flange formed from 12 GA (.105) sheet steel conforming to ASTM A1011. Standing surface is perforated with 5/16" diameter holes. Finish: TenderTuff™, color specified.

Handhold Panel: Solid color Permalene®, color specified.

Fasteners: Primary fasteners shall be socketed and pinned tamperproof in design, stainless steel (SST) per ASTM F 879 unless otherwise indicated (see specific product installation/specifications).

Installation Time: Approx. 2 man hours
Concrete Req: **DB** - 30" - 40" Deck - 3 cu. ft.
48" Deck - 2 cu. ft.
Area Req: 6' (1,83 m) minimum use zone
Weight: 30" - 40" Deck - 110 lbs.
48" Deck - 120 lbs.
Fall Height: 30" (0,76 m)
32" (0,81 m)
40" (1,02 m)
48" (1,22 m)

Installation Instructions

Direct Bury

1) Dig footings as shown. See Direct Bury Detail.
2) Set arches in footing holes and attach to the face of deck using 3/8" x 7/8" BHCS w/pin and 3/8" standard hex nuts with 3/8" SAE flat washers.
3) Insert planks over flanges on arches and attach using 3/8" x 7/8" BHCS w/pin with 3/8" SAE flat washers and 3/8" standard hex nuts with 3/8" SAE flat washers. **NOTE:** *Position planks with perforated holes facing up.*
4) Attach handhold panel to posts using 3/8" x 5/8" BHCS w/pin and 3/8" flange nuts w/pin.
5) Using a 7/16" drill bit, drill out the lower 1/8" pilot hole in each handhold panel for attaching handrails.
6) Attach handhold panel to cozy climber arches using 3/8" x 1 3/8" BHCS w/pin and 1 1/8" O.D. x 1/4" spacers. See Detail.
7) With climber in final position, pour concrete footings. Allow concrete footings to cure a minimum of 72 hours before users are allowed to play on the structure.
8) Install protective surfacing before users are allowed to play on the structure.

Surface Mount

1) Attach arches to the face of the deck using 3/8" x 7/8" BHCS w/pin and 3/8" standard hex nuts with 3/8" SAE flat washers.
2) Insert planks over flanges on arches and attach using 3/8" x 7/8" BHCS w/pin with 3/8" SAE flat washers and 3/8" standard hex nuts with 3/8" SAE flat washers. **NOTE:** *Position planks with perforated holes facing up.*
3) Attach handhold panel to posts using 3/8" x 5/8" BHCS w/pin and 3/8" flange nuts w/pin.
4) Using a 7/16" drill bit, drill out the lower 1/8" pilot hole in each handhold panel for attaching handrails.
5) Attach handhold panel to cozy climber arches using 3/8" x 1 3/8" BHCS w/pin and 1 1/8" O.D. x 1/4" spacers. See Detail.
6) Drill through holes in bottom of arches into concrete slab using 1/2" masonry bit and hammer drill. Tap expansion anchors into drilled holes. fasten with 1/2" standard hex nuts and 1/2" flat washers.
7) Install protective surfacing before users are allowed to play on the structure.

Specifications are subject to change without notice.

Eco #52521 Document #14899900 replaces #14548600. Pictorially updated arches.

landscape structures®

ISO 14001 CERTIFIED

ISO 9001 Certified

SAFETY NOTE

Choose a protective surfacing material that has a Critical Height Value of at least the height of the Highest Accessible Part/Fall Height of the adjacent equipment. (Ref. ASTM F1487.)

211603

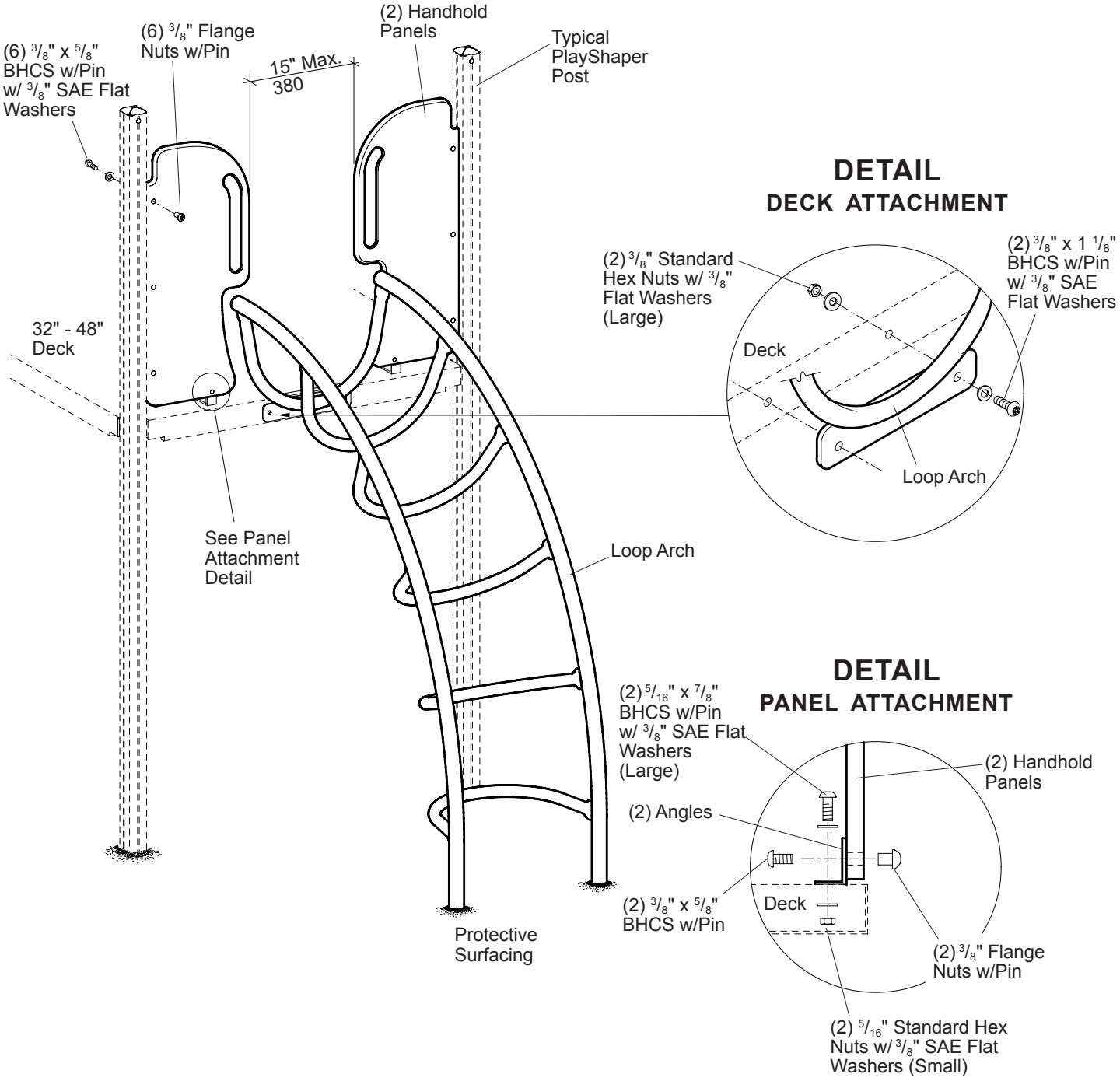

Off 32" Deck (DB) Only
Off 40" Deck (Shown)
Off 48" Deck

PlayShaper®

139262 Loop Arches

601 7TH STREET SOUTH, DELANO, MINNESOTA 55328-8605 888-574-4678 LSI Install Help 888-438-6574 LSI Direct 763-972-5200 Int. FAX (763) 972-3185

© 2015 by Landscape Structures. All rights reserved.

Document #21160300

PlayShaper® 139262 Loop Arches

Parts List

Part#	Description	Qty.
145500	Handhold Panel, Specify Color	2
111595	32", 40" & 48" Loop Arch (DB), Specify Color	1
111598	40" Loop Arch (SM), Specify Color	1
111599	48" Loop Arch (SM), Specify Color	1
211598	**Loop Arch Hardware Package**	1
100195	3/8" x 5/8" BHCS w/Pin, SST	8
100198	3/8" x 1 1/8" BHCS w/Pin, SST	2
100326	5/16" Standard Hex Nut, SST	2
100327	3/8" Standard Hex Nut, SST	2
100353	3/8" Flange Nut w/Pin, SST	8
100362	3/8" Flat Washer, SST	2
100365	3/8" SAE Flat Washer, SST	12
106187	Angle, SST	2
132626	5/16" x 7/8" BHCS w/Pin, SST	2
121348	**4-Hole (SM) Hardware Package**	1
100266	1/2" x 2 3/4" Expansion Anchor	4
100322	1/2" Standard Hex Nut, SST	4
100363	1/2" Flat Washer, SST	4

DB=Direct Bury
SM=Surface Mount

Specifications

Loop Arch: Weldment comprised of 1.660" O.D. RS-20 (.085" - .095") galvanized steel tubing, 1.315" O.D. RS-20 (.080" - .090") galvanized steel tubing and 1/4" flat steel. Finish: ProShield®, color specified.

Handhold Panel: Solid color Permalene® panel measures 13 1/16" wide x 30" high with 3/4" x 1 1/8" handholds, color specified.

Fasteners: Primary fasteners shall be socketed and pinned tamperproof in design, stainless steel (SST) per ASTM F 879 unless otherwise indicated (see specific product installation/specifications).

Installation Time: **SM** - Approx. 1 1/2 man hours
DB - Approx. 2 1/2 man hours
Concrete Req.: Approx. 2.6 cu. ft.
Weight: 81 lbs.
Fall Height: Deck Height

Installation Instructions

1) (Direct Bury) Dig footing holes spaced as shown.

2) Attach loop arch to deck using 3/8" x 1 1/8" BHCS w/pin with 3/8" SAE flat washers (small) and 3/8" standard hex nuts with 3/8" flat washers (large).

3) Attach handhold panels to post flanges using 3/8" x 5/8" BHCS w/pin with 3/8" SAE flat washers (small) and 3/8" flange nuts w/pin.

4) Attach angle to handhold panels using 3/8" x 5/8" BHCS w/pin and 3/8" flange nuts w/pin.

5) Using the hole in the angle as a guide, drill through the deck using a 3/8" drill bit. Attach angles to deck using 5/16" x 7/8" BHCS w/pin with 3/8" SAE flat washers and 5/16" standard hex nuts with 3/8" SAE flat washers.

6) **(Direct Bury)** With loop arch in final position, pour concrete footings. Allow concrete footings to cure for a minimum of 72 hours before users are allowed to play on the structure.

   (Surface Mount) Mark anchor bolt locations on concrete slab through holes in anchor plate and remove loop arch. Drill 1/2" x 3" deep holes on marks into concrete using hammer drill and 1/2" masonry bit. Tap expansion anchors into drilled holes. Reposition loop arch and reattach to the face of the deck following step 2. Fasten anchor plates to expansion anchors using 1/2" standard hex nuts with 1/2" flat washers.

7) Install protective surfacing before users are allowed to play on the structure.

Specifications are subject to change without notice.

Eco #0100408 Document #21160300 replaces #15662200. Replaced loop arch hardware package.

landscape structures®

SAFETY NOTE

Choose a protective surfacing material that has a Critical Height Value of at least the height of the Highest Accessible Part/Fall Height of the adjacent equipment. (Ref. ASTM F1487.)

139263a0

PLAN VIEW/DB FOOTING LAYOUT

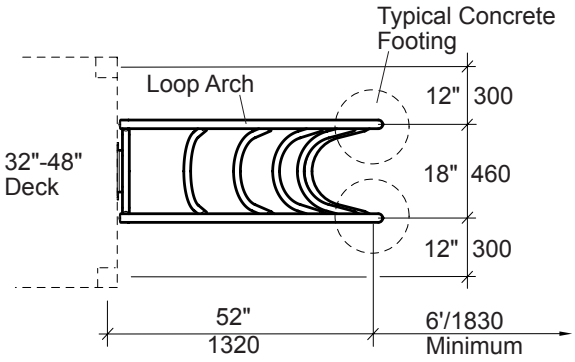

DETAIL
SURFACE MOUNT

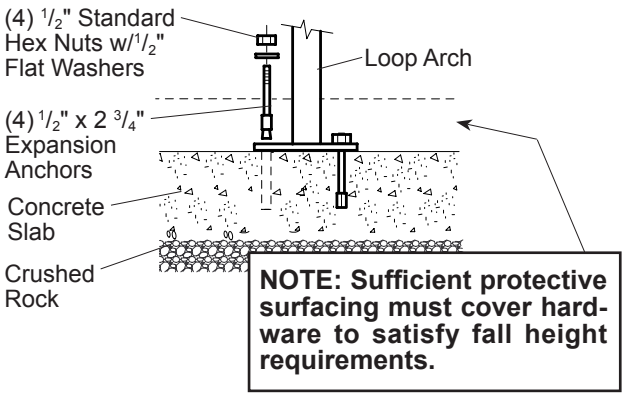

DETAIL
DIRECT BURY

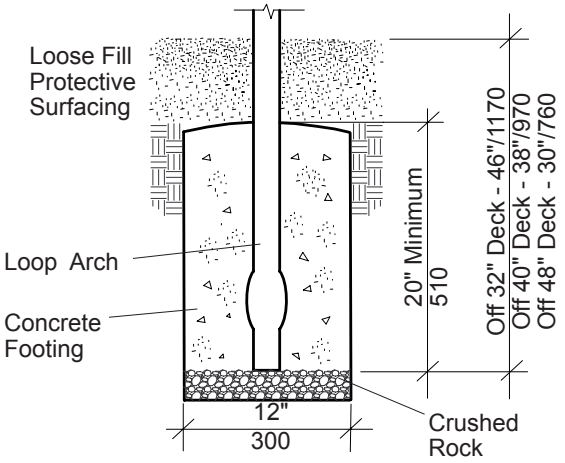

601 7TH STREET SOUTH, DELANO, MINNESOTA 55328-8605 888-574-4678 LSI Install Help 888-438-6574 LSI Direct 763-972-5200 Int. FAX (763) 972-3185

© 2015 by Landscape Structures. All rights reserved.

Document #21160300

landscape structures®

ISO 14001 CERTIFIED

ISO 9001 Certified

SAFETY NOTE

Choose a protective surfacing material that has a Critical Height Value of at least the height of the Highest Accessible Part/Fall Height of the adjacent equipment. (Ref. ASTM F1487.)

15330400

PLAN VIEW
FOOTING LAYOUT

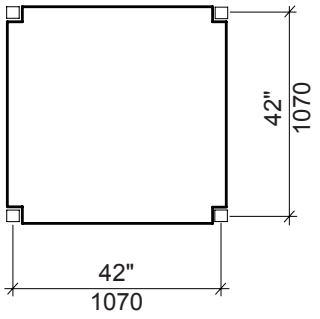

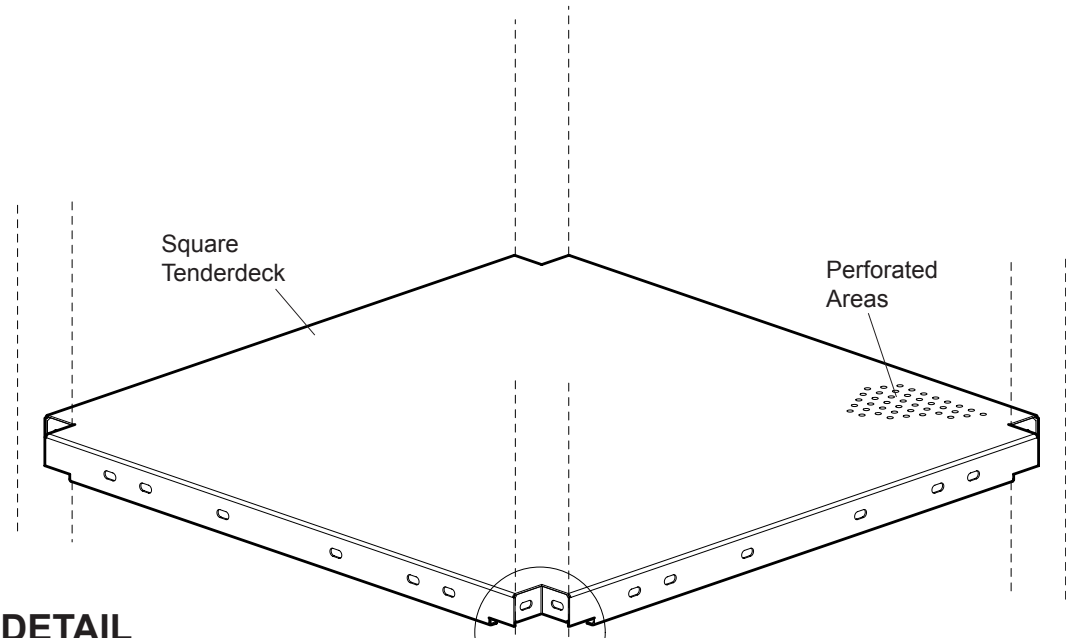

DETAIL
DECK ATTACHMENT

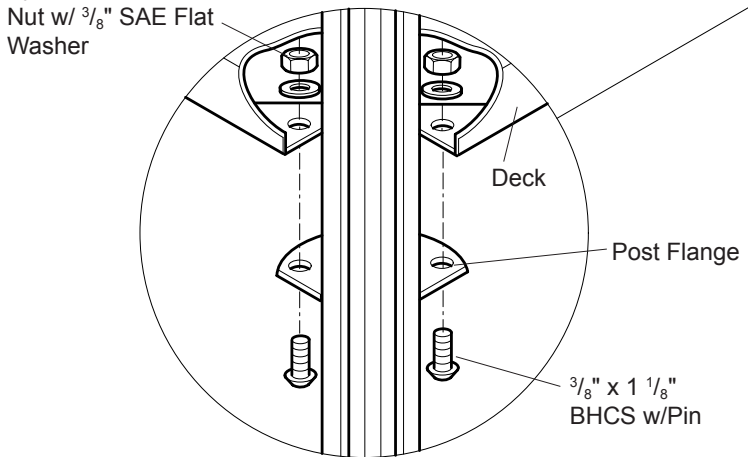

PlayShaper®

111237 Tenderdeck

601 7TH STREET SOUTH, DELANO, MINNESOTA 55328-8605 888-574-4678 LSI Install Help 888-438-6574 LSI Direct 763-972-5200 Int. FAX (763) 972-3185

© 2005 by Landscape Structures. All rights reserved.

landscape structures®

PlayShaper® 111237 Tenderdeck

Parts List

Part#	Description	Qty.
153298	Tenderdeck, Specify Color	1
106695	**Hardware Package**	1
100198	3/8" x 1 1/8" BHCS w/Pin, SST	8
100327	3/8" Standard Hex Nut, SST	8
100365	3/8" SAE Flat Washer, SST	8

Specifications

Square Deck: Flange formed from 12 GA (.105") sheet steel conforming to ASTM A1011. Standing surface is perforated with 5/16" diameter holes. Deck face has (6) slotted holes for face mounting components. The finished size measures 2 5/8" x 44 3/8" x 44 3/8". Finish: TenderTuff™, color specified.

Fasteners: Primary fasteners shall be socketed and pinned tamperproof in design, stainless steel (SST) per ASTM F 879 unless otherwise indicated (see specific product installation/specifications).

Installation Time: Approx: 3/4 man hour

Weight: 102 lbs.

Installation Instructions

1) Orient posts correctly according to labeled post letters and set in proper footing holes.
2) Position deck on post flanges and attach using 3/8" x 1 1/8" BHCS w/ pin and 3/8" standard hex nuts with 3/8" SAE flat washers. See Deck Attachment Detail.
3) Level deck and plumb posts.
4) Install other panels/ components according to their respective installation sheets.
5) Pour concrete footings. Allow concrete footings to cure a minimum of 72 hours before users are allowed to play on the structure.
6) Install protective surfacing before users are allowed to play on the structure.

Specifications are subject to change without notice.

Eco#52809 Document #15330400 replaces #14611000. Added slots to deck.

landscape structures®

ISO 14001 CERTIFIED

ISO 9001 Certified

SAFETY NOTE

Choose a protective surfacing material that has a Critical Height Value of at least the height of the Highest Accessible Part/Fall Height of the adjacent equipment. (Ref. ASTM F1487.)

20403200

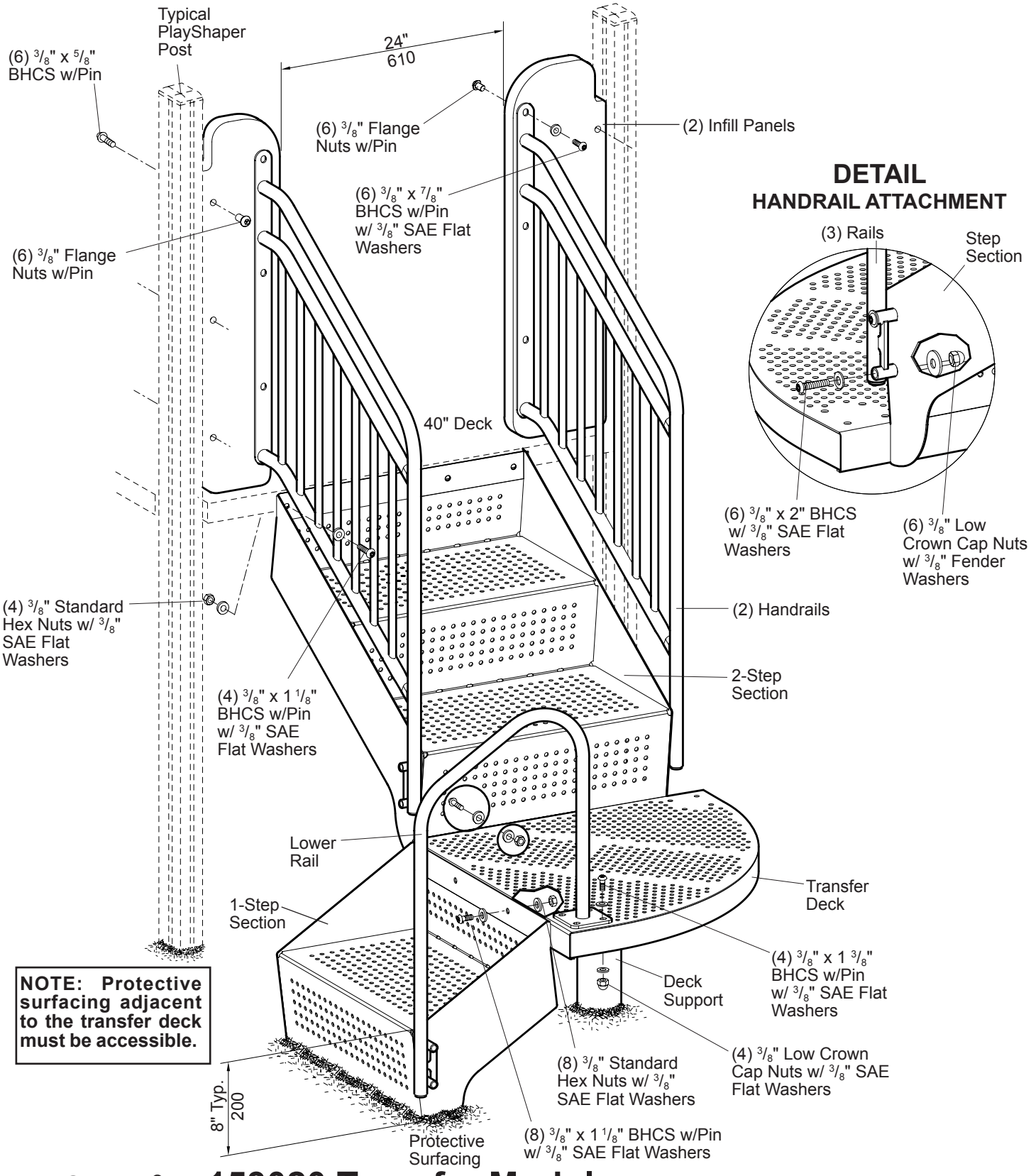

DETAIL
HANDRAIL ATTACHMENT

NOTE: Protective surfacing adjacent to the transfer deck must be accessible.

PlayShaper® 153020 Transfer Module, 40", w/Handrails

601 7TH STREET SOUTH, DELANO, MINNESOTA 55328-8605 888-574-4678 LSI Install Help 888-438-6574 LSI Direct 763-972-5200 Int. FAX (763) 972-3185

© 2014 by Landscape Structures. All rights reserved.

PlayShaper® 153020 Transfer Module, 40", w/Handrails

Parts List

Part#	Description	Qty.
144696	1-Step Section, Specify Color	1
144698	2-Step Section, Specify Color	1
153398	Transfer Deck, Specify Color	1
175882	2-Step Handrail, Specify Color	2
152641	Lower Rail, Specify Color	1
181371	Deck Support (DB), Specify Color	1
181373	Deck Support (SM), Specify Color	1
181374	Step Support (DB), Specify Color	1
181376	Step Support (SM), Specify Color	1
175530	Infill Panel, Specify Color	2
204036	**Transfer Module Hardware Package**	1
100173	3/8" x 2" BHCS w/Pin, SST	6
100195	3/8" x 5/8" BHCS w/Pin, SST	6
100196	3/8" x 7/8" BHCS w/Pin, SST	12
100198	3/8" x 1 1/8" BHCS w/Pin, SST	12
100327	3/8" Standard Hex Nut, SST	16
100353	3/8" Flange Nut w/Pin, SST	12
100365	3/8" SAE Flat Washer, SST	50
113027	3/8" x 1 3/8" BHCS w/Pin, SST	4
100378	3/8" Fender Washer, SST	6
100349	3/8" Low Crown Cap Nut, SST	12
111393	**4-Hole (SM) Hardware Package**	1
100263	3/8" x 2 3/4" Expansion Anchors	4
100327	3/8" Standard Hex Nut, SST	4
100365	3/8" SAE Flat Washers, SST	4
121256	**2-Hole (SM) Hardware Package**	1
100263	3/8" x 2 3/4" Expansion Anchors	2
100327	3/8" Standard Hex Nut, SST	2
100365	3/8" SAE Flat Washers, SST	2

DB=Direct Bury
SM=Surface Mount

Specifications

Deck: Flange formed from 12 GA (.105") sheet steel conforming to ASTM A1011. Standing surface is perforated with 5/16" diameter holes and measure 29" per (2) sides. Finish: TenderTuff®, color specified.

Railings: Weldment comprised of formed 1 1/8" O.D. x 11 GA (.120") steel tubing, 5/8" O.D. steel rod, 3/16" thick HRPO flat steel, 3/16" thick HRPO steel plate and 3/4" O.D. x 11 GA. (.120") stainless steel tubing. Finish: TenderTuff, color specified.

Step Sections: Formed from 12 GA (.105") sheet steel conforming to ASTM A1011. Standing surface is 24 3/8" wide x 14" deep and is perforated with 5/16" diameter holes. Finish: TenderTuff, color specified.

Deck Support: Weldment comprised of 3 1/2" O.D. RS20 (.125") galvanized steel tubing and 3/8" O.D. x 5" long rod. Finish: ProShield®, color specified.

Step Support: Weldment comprised of 1.660 O.D. RS20 (.080"-.095) galvanized steel tubing and 1 3/4" x 1 3/4" x 1/8" HR angle. Finish: ProShield, color specified.

Panel: Solid color Permalene®, color specified.

Fasteners: Primary fasteners shall be socketed and pinned tamperproof in design, stainless steel (SST) per ASTM F 879 unless otherwise indicated (see specific product installation/specifications).

Installation Time: **SM** - Approx. 3 man hours
DB - Approx. 4 man hours

Concrete Req.: Approx. 3.4 cu. ft.

Weight: **SM** - 236 lbs.
DB - 251 lbs.

Fall Height: Deck Height

Installation Instructions

1) **(Direct Bury)** Dig footings as shown. Refer to your Plan View/Footing Layout.

2) Attach the deck support to the transfer deck using 3/8" x 7/8" BHCS w/pin and 3/8" low crown cap nuts with 3/8" SAE flat washers. **NOTE:** *Make sure 3/8" rod on support is under support strap on deck as shown.* Refer to the Deck Support Attachment Detail.

3) Attach the 2-step section to the transfer deck using 3/8" x 1 1/8" BHCS w/pin with 3/8" SAE flat washers and 3/8" standard hex nuts with 3/8" SAE flat washers.

4) Attach the 2-step section to the face of the mainstructure deck using 3/8" x 1 1/8" BHCS w/pin with 3/8" SAE flat washers and 3/8" standard hex nuts with 3/8" SAE flat washers.

5) Attach the step support to the 1-step section using 3/8" x 7/8" BHCS w/pin with 3/8" SAE flat washers and 3/8" standard hex nuts. Refer to the Step Support Attachment Detail.

6) Attach the 1-step section to the transfer deck using 3/8" x 1 1/8" BHCS w/pin with 3/8" SAE flat washers and 3/8" standard hex nuts with 3/8" SAE flat washers.

7) Attach infill panels to the posts using 3/8" x 5/8" BHCS w/pin with 3/8" flange nuts w/pin.

8) Attach the handrails to the steps using 3/8" x 2" BHCS with 3/8" SAE flat washers and 3/8" low crown cap nuts with 3/8" fender washers. Refer to the Handrail Attachment Detail.

9) Attach handrails to the infill panels using 3/8" x 7/8" BHCS w/pin with 3/8" SAE flat washers and 3/8" flange nuts w/pin.

10) Attach the lower rails to the transfer deck using 3/8" x 1 3/8" BHCS w/pin with 3/8" SAE flat washers and 3/8" low crown cap nuts with 3/8" SAE flat washers.

11) Attach the lower rail to the 1-step section using 3/8" x 2" BHCS with 3/8" SAE flat washers and 3/8" low crown cap nuts with 3/8" fender washers. Refer to the Handrail Attachment Detail.

12) **(Direct Bury)** With transfer deck and steps level and supports plumb, pour concrete footings. Allow concrete footings to cure a minimum of 72 hours before users are allowed to play on the structure.

(Surface Mount) Mark holes for expansion anchors on concrete slab through support plates. Detach the module from the mainstructure and slide module aside, drill 3/8" x 3" deep holes on marks using hammer drill and 3/8" masonry bit. Reposition module over drilled holes and tap expansion anchors into drilled holes. Fasten support plates to expansion anchors using 3/8" standard hex nuts with 3/8" SAE flat washers. Reattach module to structure.

13) Install protective surfacing before users are allowed to play on the structure.

Specifications are subject to change without notice.

Eco 0100178 Document 20403200 replaces 18138400. Replaced hardware package.

landscape structures®

SAFETY NOTE

Choose a protective surfacing material that has a Critical Height Value of at least the height of the Highest Accessible Part/Fall Height of the adjacent equipment. (Ref. ASTM F1487.)

204032a

PLAN VIEW FOOTING LAYOUT
RIGHT HAND STEP

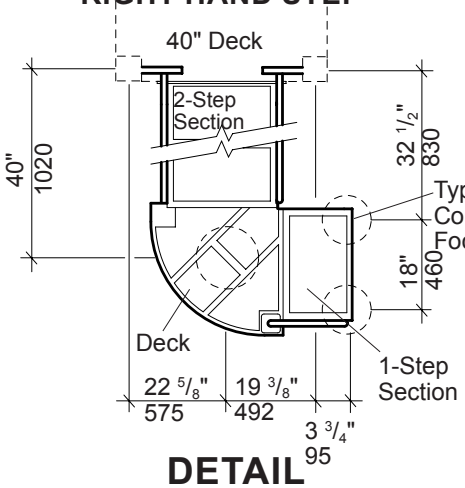

PLAN VIEW FOOTING LAYOUT
LEFT HAND STEP

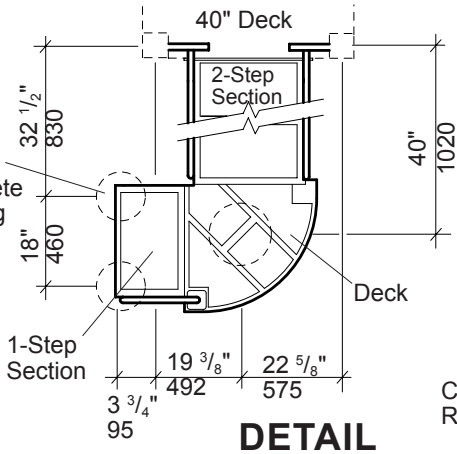

DETAIL
STEP SUPPORT BURY

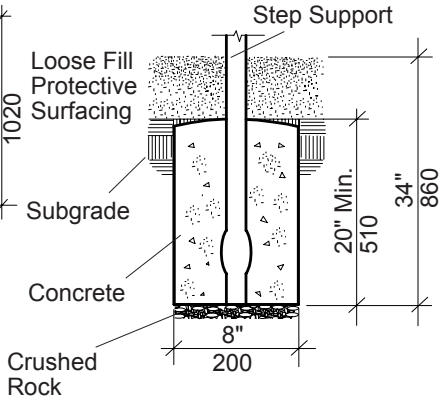

DETAIL
SURFACE MOUNT DECK SUPPORT

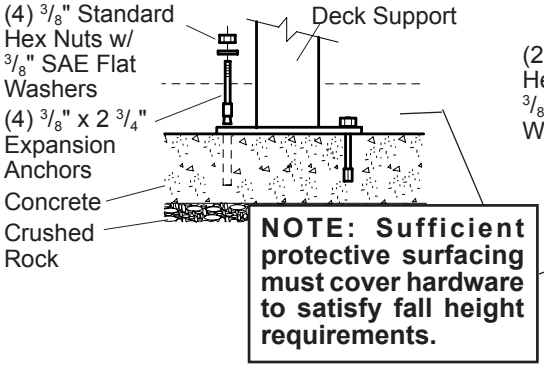

NOTE: Sufficient protective surfacing must cover hardware to satisfy fall height requirements.

DETAIL
SURFACE MOUNT STEP SUPPORT

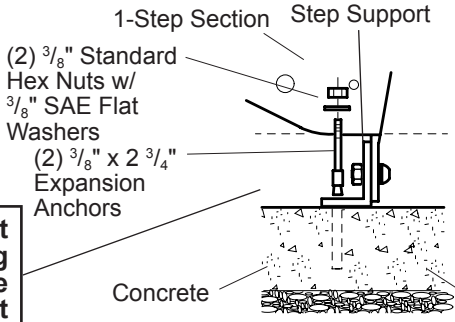

DETAIL
DECK SUPPORT BURY

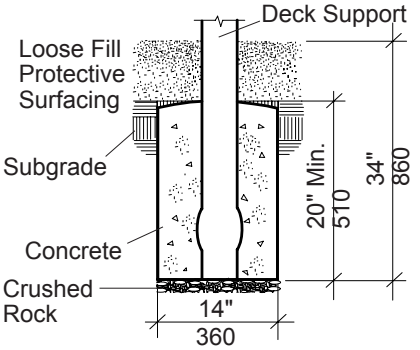

DETAIL
DECK SUPPORT ATTACHMENT

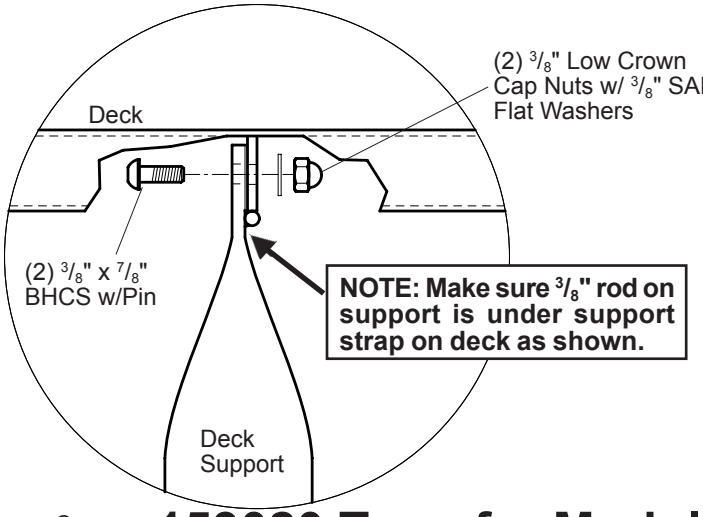

DETAIL
STEP SUPPORT ATTACHMENT

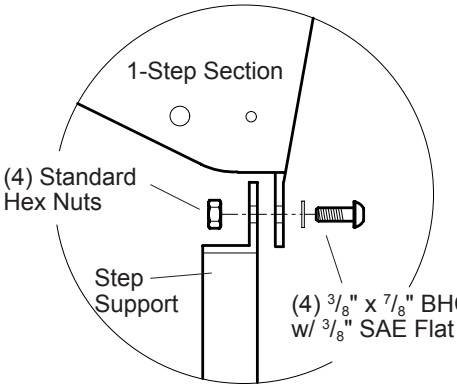

PlayShaper® 153020 Transfer Module, 40", w/Handrails

601 7TH STREET SOUTH, DELANO, MINNESOTA 55328-8605 888-574-4678 LSI Install Help 888-438-6574 LSI Direct 763-972-5200 Int. FAX (763) 972-3185

© 2014 by Landscape Structures. All rights reserved.

Document #20403200

landscape structures®

ISO 14001 CERTIFIED

ISO 9001 Certified

SAFETY NOTE

Choose a protective surfacing material that has a Critical Height Value of at least the height of the Highest Accessible Part/Fall Height of the adjacent equipment. (Ref. ASTM F1487.)

18160300

DETAIL
KICK PLATE ATTACHMENT (FOR 6" OR 8" RISE)

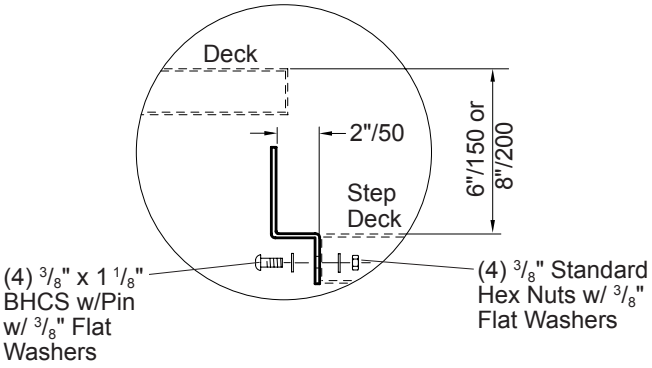

KICK PLATE
(FOR 16" RISE)

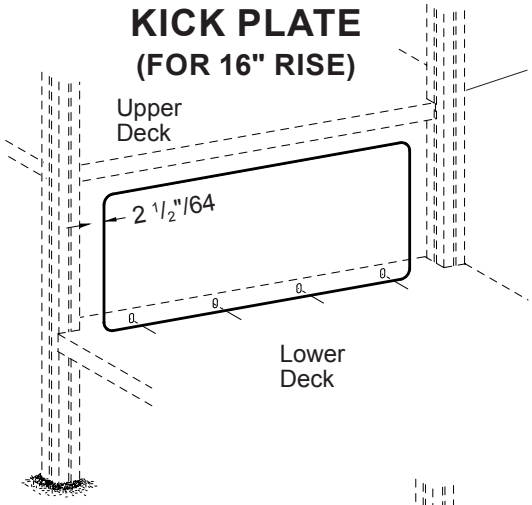

DETAIL
KICK PLATE ATTACHMENT (FOR 16" RISE)

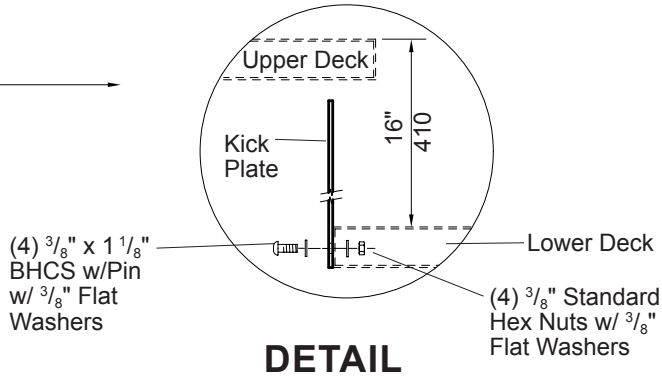

KICK PLATE
(FOR 6" OR 8" RISE)

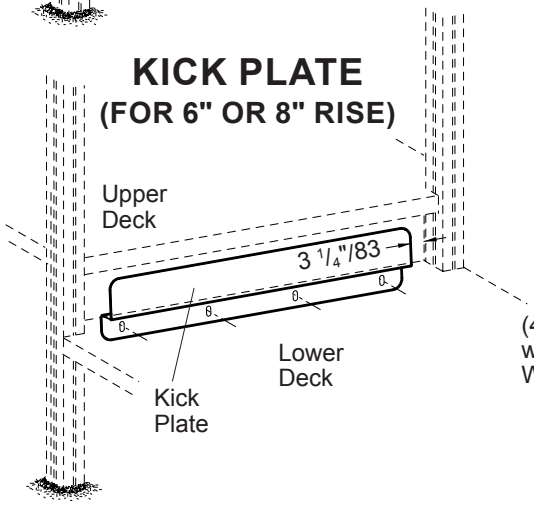

DETAIL
KICK PLATE ATTACHMENT (FOR 6" OR 8" RISE)

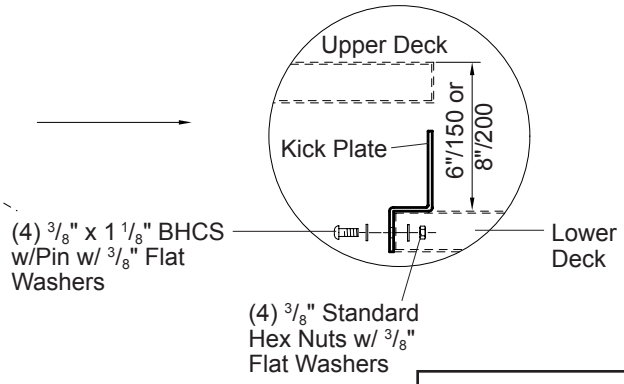

NOTE: Kick Plates mount to face of lower deck.

PlayShaper® 179349 Kick Plates, Tenderdecks, 6", 8" & 16"

601 7TH STREET SOUTH, DELANO, MINNESOTA 55328-8605 888-574-4678 LSI Install Help 888-438-6574 LSI Direct 763-972-5200 Int. FAX (763) 972-3185

© 2011 by Landscape Structures. All rights reserved.

PlayShaper® 179349 Kick Plates, Tenderdecks, 6", 8" & 16"

Parts List

Part#	Description	Qty.
121819	Kick Plate (For 6" or 8" Rise), Specify Color	1
121818	Kick Plate (For 16" Rise), Specify Color	1
156058	**Kick Plate Tenderdeck Hardware Package**	1
100198	$^3/_8$" x 1 $^1/_8$" BHCS w/Pin, SST	4
100327	$^3/_8$" Standard Hex Nut, SST	4
100362	$^3/_8$" Flat Washer, SST	8

Specifications

Kick Plate: Fabricated from 11 GA (.120") HR flat steel. Finish: TenderTuff™, color specified.

Fasteners: Primary fasteners shall be socketed and pinned tamperproof in design, stainless steel (SST) per ASTM F 879 unless otherwise indicated (see specific product installation/specifications).

Installation Time: Approx. $^1/_4$ man hour

Weight: Kick Plate (For 6" or 8" Rise) 13 lbs.
Kick Plate (For 16" Rise) 22 lbs.

Installation Instructions

1) Locate kick plates as labeled on your plan drawing.

2) Attach kick plate using $^3/_8$" x 1 $^1/_8$" BHCS w/pin with $^3/_8$" flat washers and $^3/_8$" standard hex nuts with $^3/_8$" flat washers, as shown. **NOTE:** *Kick plates mount to face of lower deck.*

3) Install protective surfacing before users are allowed to play on the structure.

Specifications are subject to change without notice.

landscape structures®

ISO 14001 CERTIFIED

ISO 9001 Certified

SAFETY NOTE

Choose a protective surfacing material that has a Critical Height Value of at least the height of the Highest Accessible Part/Fall Height of the adjacent equipment. (Ref. ASTM F1487.)

14023600

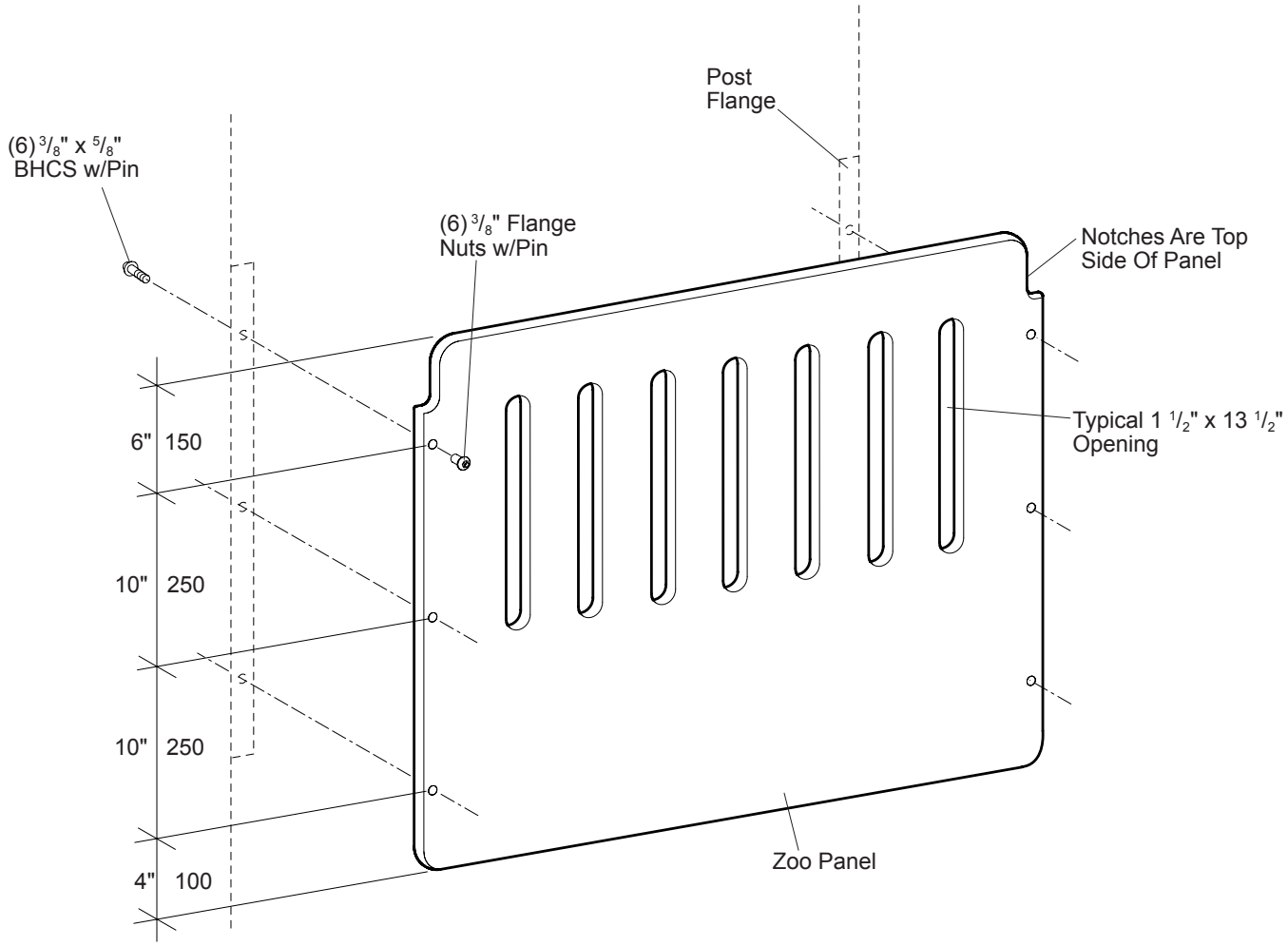

PS = Playshaper
LW = Learning Wall - Mounted 1 3/4" Above The Playing Surface.

PlayShaper®

111287/184857 Zoo Panel

601 7TH STREET SOUTH, DELANO, MINNESOTA 55328-8605 888-574-4678 LSI Install Help 888-438-6574 LSI Direct 763-972-5200 Int. FAX (763) 972-3185

© 2008 by Landscape Structures. All rights reserved.

PlayShaper® 111287/184857 Zoo Panel

Parts List

Part#	Description	Qty.
140233	Zoo Panel, Specify Color	1
106480	**Panel Hardware Package**	1
100195	$^3/_8$" x $^5/_8$" BHCS w/Pin, SST	6
100353	$^3/_8$" Flange Nut w/Pin, SST	6

Specifications

Permalene® Panel: Solid color panel measures 39 $^1/_2$" wide x 30" high, color specified.

Fasteners: Primary fasteners shall be socketed and pinned tamperproof in design, stainless steel (SST) per ASTM F 879 unless otherwise indicated (see specific product installation/specifications).

Installation Time: Approx. $^1/_4$ man hour

Weight: 25 lbs.

Installation Instructions

1) Attach panel to post flanges using $^3/_8$" x $^5/_8$" BHCS w/pin and $^3/_8$" flange nuts w/pin.

2) Install protective surfacing before users are allowed to play on the structure.

Specifications are subject to change without notice.

ECO #53669 Document #16551300 replaces #14023600. Changed height of panel to 30".
Eco #54656 Added new model number.

landscape structures®

ISO 14001 CERTIFIED

ISO 9001 Certified

SAFETY NOTE

Choose a protective surfacing material that has a Critical Height Value of at least the height of the Highest Accessible Part/Fall Height of the adjacent equipment. (Ref. ASTM F1487.)

Refer to Wheel Assembly Details on sheet 2.

PS = Playshaper
LW = Learning Wall - Mounted 1 3/4" Above The Playing Surface.

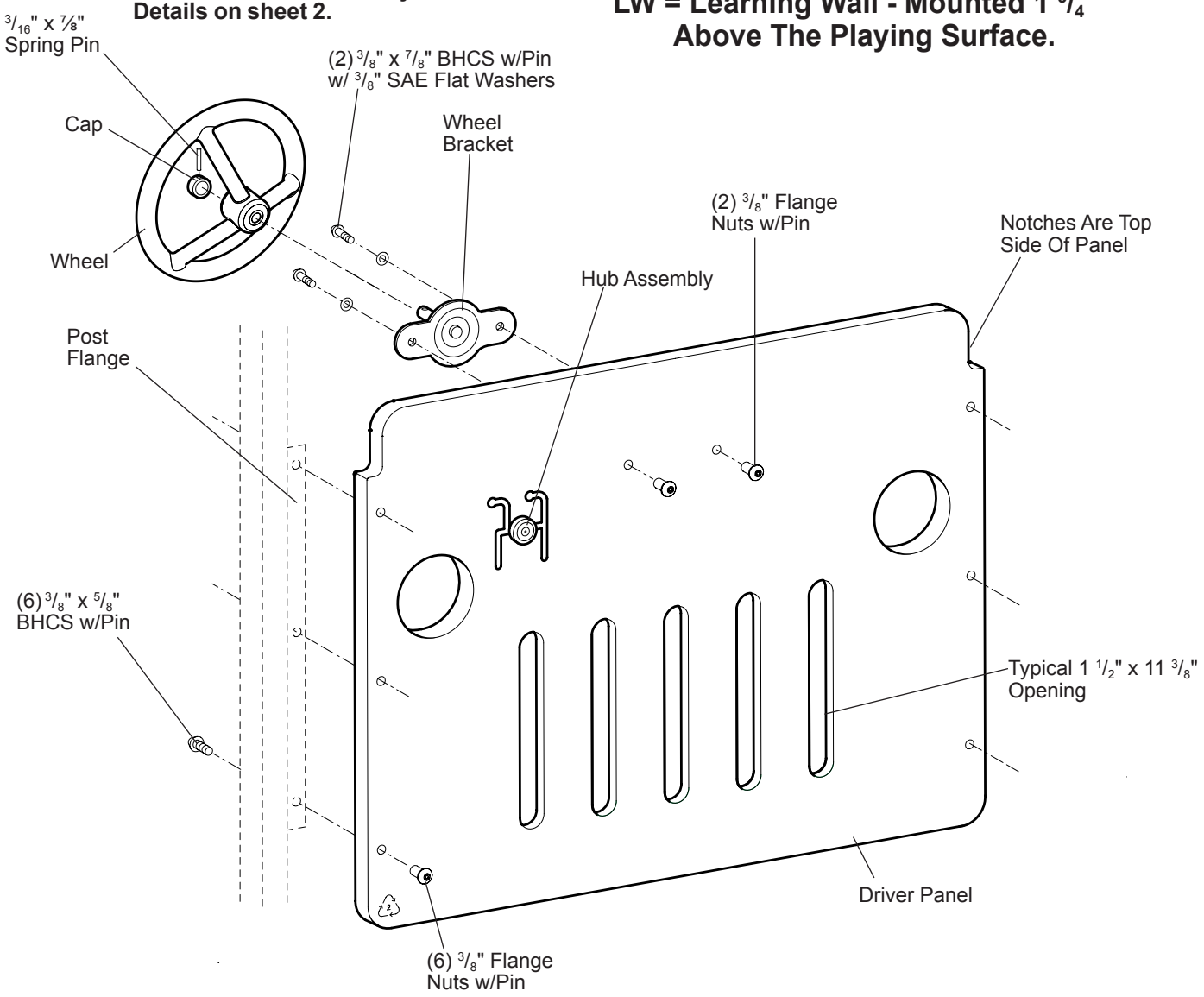

NOTE: Steering Wheel Infill Panel available. Refer to the Wheel Spec Sheet.

PlayShaper®

111288/184858 Driver Panel

601 7TH STREET SOUTH, DELANO, MINNESOTA 55328-8605 888-574-4678 LSI Install Help 888-438-6574 LSI Direct 763-972-5200 Int. FAX (763) 972-3185

© 2016 by Landscape Structures. All rights reserved.

Document #24038700

PlayShaper® 111288/184858 Driver Panel

Parts List

Part#	Description	Qty.
140235	Driver Panel, Specify Color	1
108432	Wheel, Specify Color	1
127242	Steering Wheel Bracket, Specify Color	1
106480	**Attachment Hardware Package**	1
100195	3/8" x 5/8" BHCS w/Pin, SST	6
100353	3/8" Flange Nut w/Pin, SST	6
240451	**Driver Panel Hardware Package**	1
100196	3/8" x 7/8" BHCS w/Pin, SST	2
100353	3/8" Flange Nut w/Pin, SST	2
237528	3/16" x 7/8" Spring Pin, SST	1
234353	Cap, White	1
100365	3/8" SAE Flat Washer, SST	2

Specifications

Permalene® Panel: Two color panel measures 39 1/2" wide x 30" high, color specified.

Wheel: 12" diameter cast A356 aluminum alloy. Finish: TenderTuff®, color specified.

Wheel Bracket: Weldment comprised of formed 3/16" plate and 5/8" O.D. stainless steel shaft. Finish: ProShield®, color specified.

Fasteners: Primary fasteners shall be socketed and pinned tamperproof in design, stainless steel (SST) per ASTM F 879 unless otherwise indicated (see specific product installation/specifications).

Installation Time: Approx. 1/2 man hour

Weight: 30 lbs.

Installation Instructions

1) Attach wheel bracket to panel using 3/8" x 5/8" BHCS w/pin with 3/8" SAE flat washers and 3/8" flange nuts w/pin. Slide wheel and cap onto wheel bracket shaft and tap 3/16" x 7/8" spring pin through cap and shaft. **NOTE:** *To assist in the alignment of the cap to the wheel bracket shaft, tap spring pin through cap approximately 1/16". Orient spring pin to groove on wheel bracket shaft. Slide cap in place and tap spring pin though cap and shaft until flush.*

2) Attach panel to post flanges using 3/8" x 5/8" BHCS w/pin with 3/8" flange nuts w/pin.

3) Install protective surfacing before users are allowed to play on the structure.

Specifications are subject to change without notice.

Eco #0101223 Document #24038700 replaces #22324900. Replaced cap and spring pin.

landscape structures®

DETAIL
WHEEL ASSEMBLY

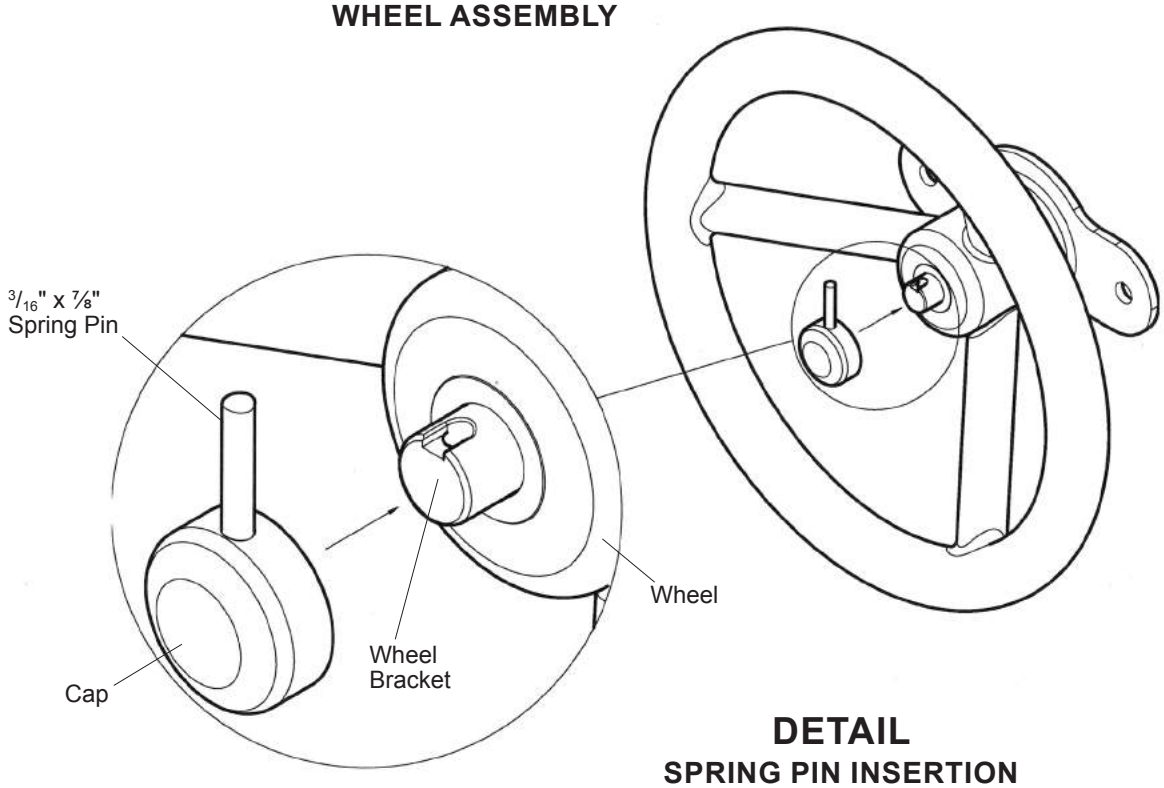

DETAIL
SPRING PIN INSERTION
(CAP BACK VIEW)

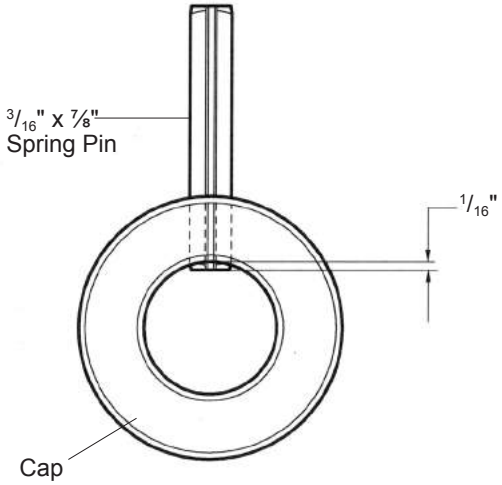

NOTE: To assist in the alignment of the cap to the wheel bracket shaft, tap spring pin through cap approximately 1/16". Orient spring pin to groove on wheel bracket shaft. Slide cap in place and tap spring pin though cap and shaft until flush.

601 7TH STREET SOUTH, DELANO, MINNESOTA 55328-8605 888-574-4678 LSI Install Help 888-438-6574 LSI Direct 763-972-5200 Int. FAX (763) 972-3185

© 2016 by Landscape Structures. All rights reserved.

landscape structures®

ISO 14001 CERTIFIED

ISO 9001 Certified

SAFETY NOTE

Choose a protective surfacing material that has a Critical Height Value of at least the height of the Highest Accessible Part/Fall Height of the adjacent equipment. (Ref. ASTM F1487.)

16461300

PS = Playshaper
LW = Learning Wall - Mounted 1 3/4" Above The Playing Surface.

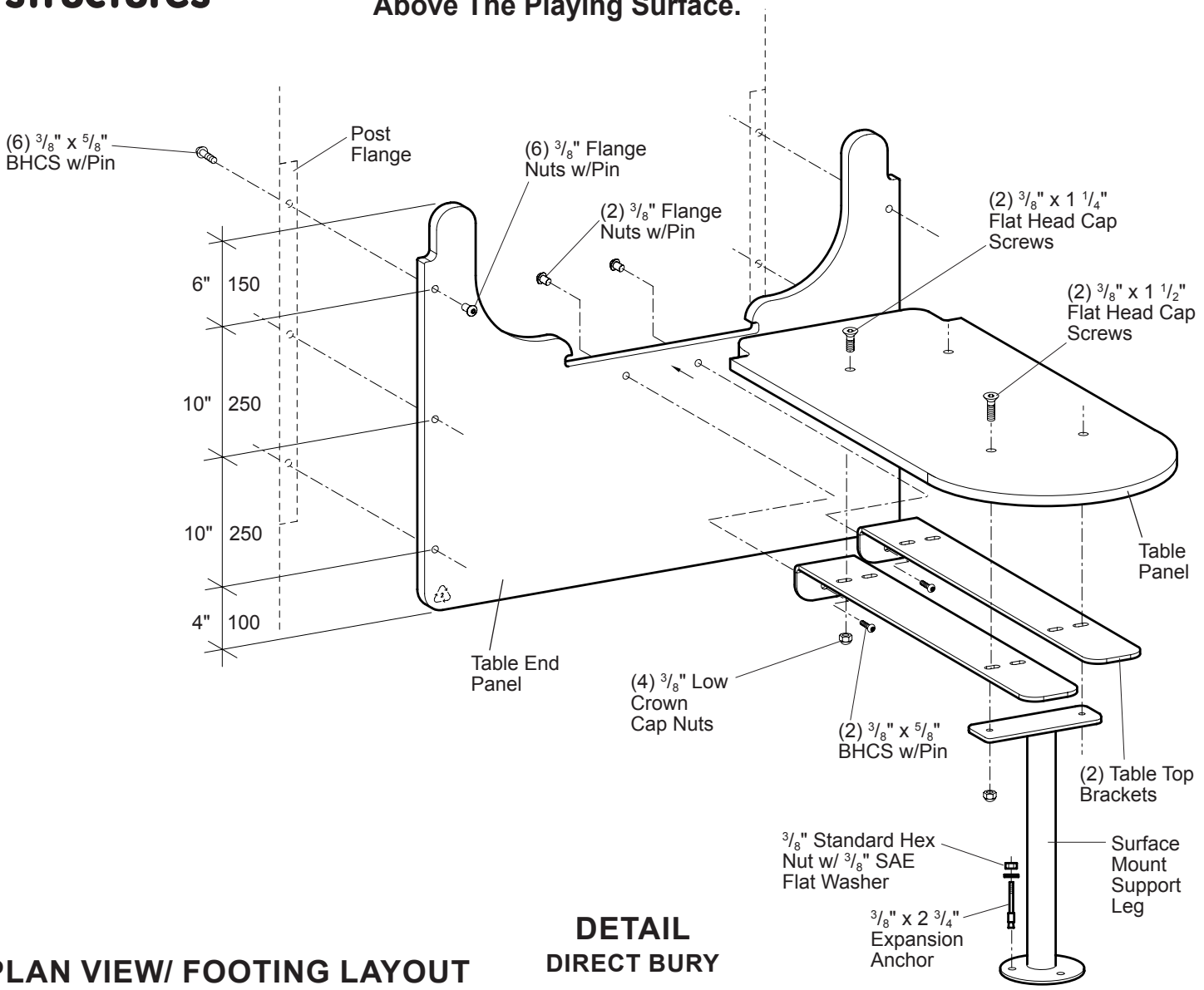

PLAN VIEW/ FOOTING LAYOUT

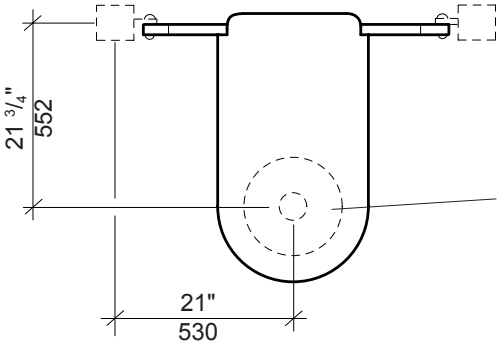

DETAIL
DIRECT BURY

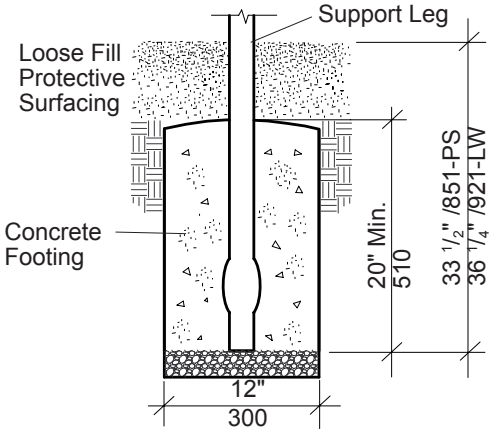

PlayShaper® 111292/184861 Table Panel, Ground Level

601 7TH STREET SOUTH, DELANO, MINNESOTA 55328-8605 888-574-4678 LSI Install Help 888-438-6574 LSI Direct 763-972-5200 Int. FAX (763) 972-3185

© 2008 by Landscape Structures. All rights reserved.

PlayShaper® 111292/184861 Table Panel, Ground Level

Parts List

Part#	Description	Qty.
165143	Table Top Bracket, Specify Color	2
103116	Support Leg, (DB), Specify Color	1
103119	Support Leg, (SM), PS, Specify Color	1
114290	Support Leg, (SM), LW, Specify Color	1
109334	Table End Panel, Specify Color	1
130370	Table Panel, Specify Color	1
152774	**Hardware Package**	1
100195	3/8" x 5/8" BHCS w/Pin, SST	8
100252	3/8" x 1 1/4" Flat Head Cap Screw, SST	2
151421	3/8" x 1 1/2" Flat Head Cap Screw, SST	2
100349	3/8" Low Crown Cap Nut, SST	4
100353	3/8" Flange Nut w/Pin, SST	8
112980	**1-Hole (SM) Hardware Package**	1
100263	3/8"x 2 3/4" Expansion Anchor	1
100327	3/8" Standard Hex Nut, SST	1
100365	3/8" SAE Flat Washer, SST	1

DB=Direct Bury
SM=Surface Mount

Specifications

Permalene® Panel: Solid color panel measures 39 1/2" wide x 30" high, color specified.

Table Top Panel: Solid color Permalene panel measures 19 1/2" wide x 34 3/4" high, color specified.

Support Leg: Weldment comprised of 2.375" O.D. RS-20 (.095" - .105") galvanized steel tubing and 1/4" x 2 1/2" x 9" flat plate. Finish: ProShield®, color specified.

Table Top Bracket: Fabricated from 1/4" x 3 1/2" x 28 9/16" HRPO flat steel. Finish: ProShield, color matched to posts.

Fasteners: Primary fasteners shall be socketed and pinned tamperproof in design, stainless steel (SST) per ASTM F 879 unless otherwise indicated (see specific product installation/specifications).

Installation Time: Approx. 1 1/2 man hours
Concrete Req.: Approx. 1.3 cu. ft.
Weight: 68 lbs.

Installation Instructions

1) **(Direct Bury)** Dig footing hole spaced and to depth shown on front of sheet.

2) Attach table top brackets and support leg to underside of table top panel using 3/8" x 1 1/4" flat head cap screws through panel and table top brackets, and 3/8" x 1 1/2" flat head cap screws through panel, table top brackets and support leg. Secure with 3/8" low crown cap nuts.

3) Attach table top assembly to table end panel using 3/8" x 5/8" BHCS w/ pin through table top brackets and 3/8" flange nuts w/pin through panel.

4) Attach panel to post flanges using 3/8" x 5/8" BHCS w/pin and 3/8" flange nuts w/pin.

5) **(Direct Bury)** Level table and prop in position. Pour concrete footing. Allow concrete footing to cure a minimum of 72 hours before users are allowed to play on the structure.

   (Surface Mount) Using 3/8" masonry bit, drill through holes in base plate into concrete slab 3" deep. Insert and tap 3/8" x 2 3/4" expansion anchors into holes and secure with 3/8" standard hex nuts and 3/8" SAE flat washers.

6) Install protective surfacing before users are allowed to play on the structure.

Specifications are subject to change without notice.

Eco #53623 Document #16461300 replaces #15277600. Replaced table top frame with table top brackets.
Eco #54656 Added new model number.

landscape structures®

ISO 14001 CERTIFIED

ISO 9001 Certified

SAFETY NOTE

Choose a protective surfacing material that has a Critical Height Value of at least the height of the Highest Accessible Part/Fall Height of the adjacent equipment. (Ref. ASTM F1487.)

6-29-01
13563200

PS = Playshaper
LW = Learning Wall - Mounted 1" Above The Playing Surface.

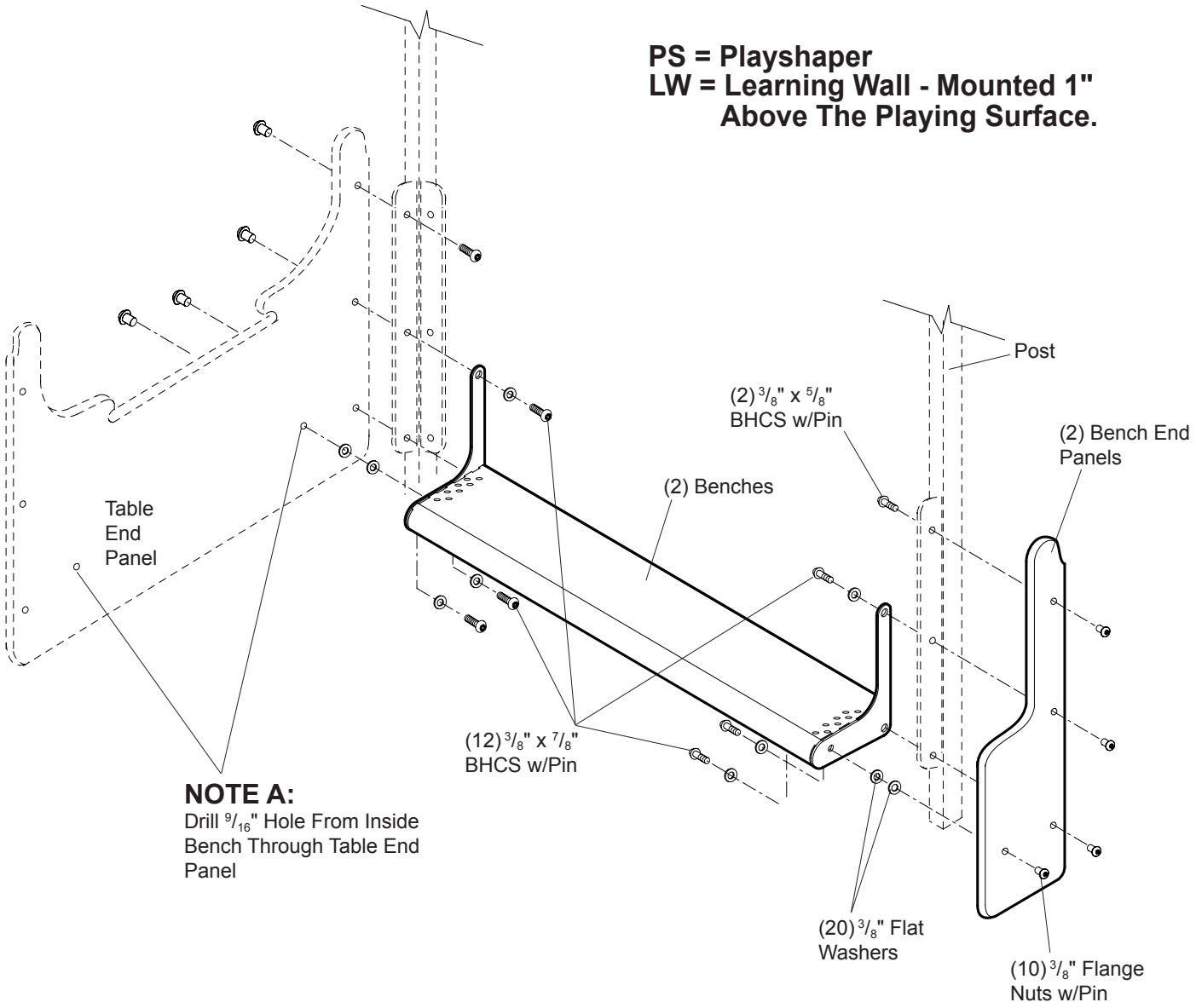

NOTE A:
Drill 9/16" Hole From Inside Bench Through Table End Panel

PlayShaper® 116120/184875 Benches w/ End Panels, Ground Level

601 7TH STREET SOUTH, DELANO, MINNESOTA 55328-8605 888-574-4678 LSI Install Help 888-438-6574 LSI Direct 763-972-5200 Int. FAX (763) 972-3185

© 2001 by Landscape Structures. All rights reserved.

PlayShaper® 116120/184875 Benches w/ End Panels,

Ground Level

Parts List

Part#	Description	Qty.
108645	Bench, Specify Color	2
109328	Bench End Panel, Specify Color	2
115410	**Bench Hardware Package**	1
100195	$^3/_8$" x $^5/_8$" BHCS w/Pin, SST	2
100196	$^3/_8$" x $^7/_8$" BHCS w/Pin, SST	12
100353	$^3/_8$" Flange Nut w/Pin, SST	10
100362	$^3/_8$" Flat Washer, SST	20

Specifications

Bench: Flange formed from 12 GA (.105") sheet steel conforming to ASTM A1011. Seating surface is perforated with $^5/_{16}$" diameter holes. Finish: TenderTuff™, color specified.

Panel: Solid color Permalene®, color specified.

Fasteners: Primary fasteners shall be socketed and pinned tamperproof in design, stainless steel (SST) per ASTM F 879 unless otherwise indicated (see specific product installation/specifications).

Installation Time: Approx. $^3/_4$ man hour

Weight: 49 lbs.

Installation Instructions

1) Attach benches and bench end panels to posts as shown using $^3/_8$" x $^5/_8$" and $^3/_8$" x $^7/_8$" BHCS w/pin with $^3/_8$" flat washers and $^3/_8$" flange nuts w/pin. Place two $^3/_8$" flat washers between the bench and the bench end panels as shown. **NOTE:** *Two holes must be drilled in table end panel. See NOTE A.*
2) Install protective surfacing before users are allowed to play on the structure.

Specifications are subject to change without notice.

Eco #54656 Added new model number.

landscape structures®

ISO 14001 CERTIFIED

ISO 9001 Certified

SAFETY NOTE

Choose a protective surfacing material that has a Critical Height Value of at least the height of the Highest Accessible Part/Fall Height of the adjacent equipment. (Ref. ASTM F1487.)

17361600

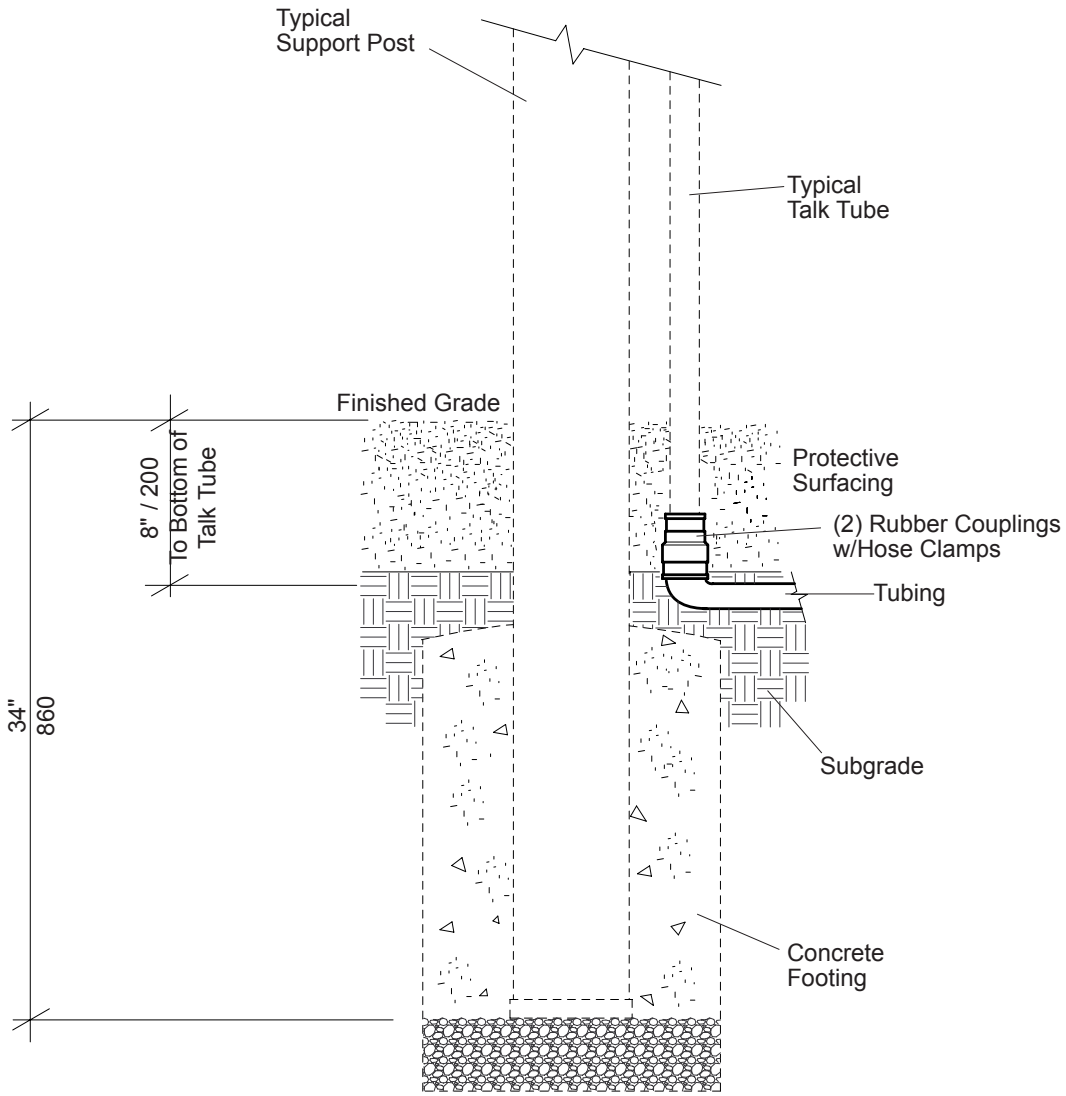

PB/PS

111362 Talk Tube Tubing Kit

601 7TH STREET SOUTH, DELANO, MINNESOTA 55328-8605 888-574-4678 LSI Install Help 888-438-6574 LSI Direct 763-972-5200 Int. FAX (763) 972-3185

© 2011 by Landscape Structures. All rights reserved.

PB/PS 111362 Talk Tube Tubing Kit

Parts List

Part#	Description	Qty
173612	1.75" O.D. Plastic Tube	50 Ft.
173622-00	**Hardware Package**	1
173611-00	Rubber Coupling w/SST Hose Clamps	2

Specifications

Talk Tube Hose: Made from HDPE conduit.

Fasteners: Primary fasteners shall be socketed and pinned tamperproof in design, stainless steel (SST) per ASTM F 879 unless otherwise indicated (see specific product installation/specifications).

Installation Time: Approx. 1-3 man hours

Weight: 14 lbs.

Installation Instructions

1) Dig a trench into subgrade between the two footings for placement of plastic tubing.
2) Cut plastic tubing to correct length for your installation, lay plastic tubing flat in trench.
3) Connect plastic tubing to talk tubes with rubber couplings with hose clamps, as shown.
4) Backfill trench to top of subgrade.
5) Install protective surfacing before users are allowed to play on the structure.

Specifications are subject to change without notice.

Eco #54234 Document #17699200 Replaces #17361600. Changed length of plastic tube to 50 feet.

landscape structures®

ISO 14001 CERTIFIED

ISO 9001 Certified

SAFETY NOTE

Choose a protective surfacing material that has a Critical Height Value of at least the height of the Highest Accessible Part/Fall Height of the adjacent equipment. (Ref. ASTM F1487.)

16756300

SECTION ELEVATION

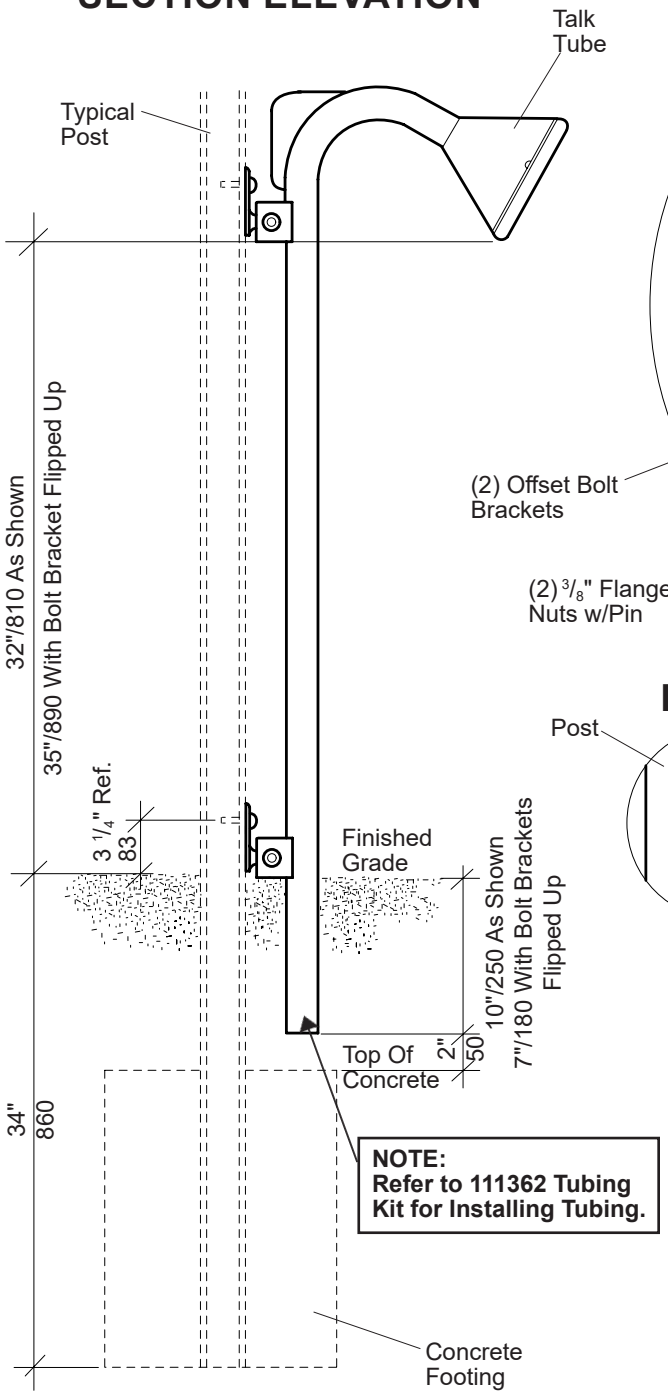

NOTE:
Refer to 111362 Tubing Kit for Installing Tubing.

DETAIL
ATTACHMENT TO POST

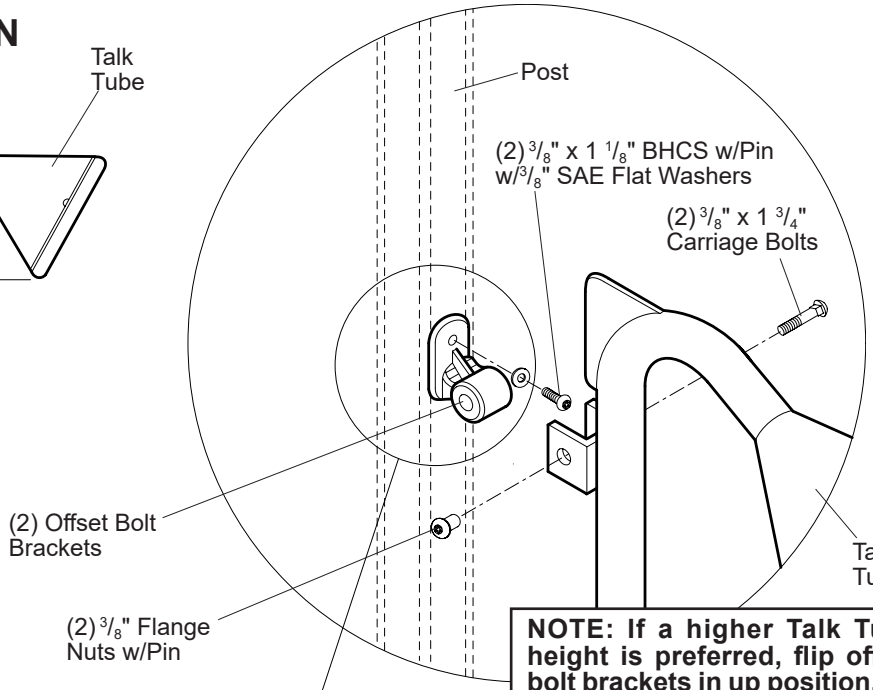

NOTE: If a higher Talk Tube height is preferred, flip offset bolt brackets in up position.

DETAIL

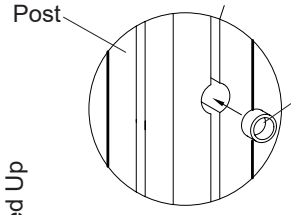

NOTE: Insert spacers into posts before attaching offset bolt brackets.

DETAIL
COVER ATTACHMENT

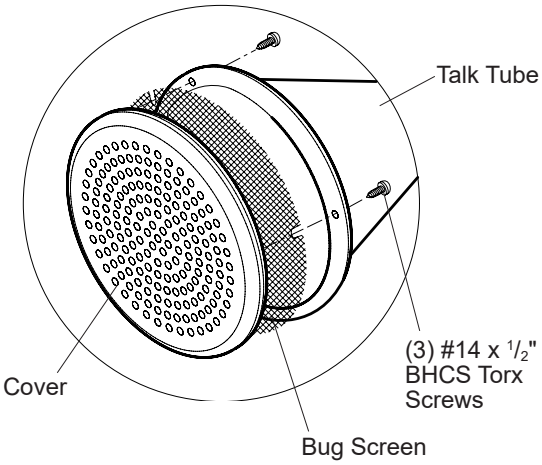

PlayShaper® 115198 Talk Tubes, Ground Level

601 7TH STREET SOUTH, DELANO, MINNESOTA 55328-8605 888-574-4678 LSI Install Help 888-438-6574 LSI Direct 763-972-5200 Int. FAX (763) 972-3185

© 2020 by Landscape Structures. All rights reserved.

Document #26966900

PlayShaper® 115198 Talk Tubes, Ground Level

Parts List

Part#	Description	Qty.
146344	Talk Tube, Ground Level, Specify Color	1
113895	Offset Bolt Bracket, Specify Color	2
132388	**Talk Tube Hardware Package**	1
100148	$^3/_8$" x 1 $^3/_4$" Carriage Bolt, SST	2
100198	$^3/_8$" x 1 $^1/_8$" BHCS w/Pin, SST	2
100353	$^3/_8$" Flange Nut w/Pin, SST	2
100365	$^3/_8$" SAE Flat Washer, SST	2
166868	$^3/_4$" O.D. x .390" Spacer, Aluminum	2
146168	**Talk Tube Cover Hardware Package**	1
129671	#14 x $^1/_2$" BHCS Torx, SST	3
145134	Talk Tube Cover, Black	1
127463	Bit Hex TPP T-27 (Torx)	1
146528	Bug Screen	1

Specifications

Talk Tube: Weldment comprised of 1.660" O.D. RS40 (.108" - .132") and $^3/_{16}$" HRPO bracket. Finish: ProShield®, color specified.

Talk Tube Cover: Solid color Permalene®, Black in color.

Bug Screen: 18 x 16 Weave .011 Ga. charcoal fiberglass screen.

Bolt Bracket: Cast from 369.1 aluminum alloy. Finish: ProShield, color specified.

Fasteners: Primary fasteners shall be socketed and pinned tamperproof in design, stainless steel (SST) per ASTM F 879 unless otherwise indicated (see specific product installation/specifications).

Installation Time: Approx. $^1/_2$ man hour per talk tube
Area Req: 6' (1,82 m) minimum use zone
Weight: 15 lbs.

Installation Instructions

1) Determine placement of talk tubes. Refer to your plan drawing. Maximum distance apart is 40 feet.
2) Dig a trench into subgrade between the two footings for placement of plastic tubing.
3) Attach offset bolt brackets to talk tubes using $^3/_8$" x 1 $^3/_4$" carriage bolts and $^3/_8$" flange nuts w/pin. See Attachment To Post Detail.
4) Attach talk tube cover and bug screen to talk tube using #14 x $^1/_2$" torx screws. Refer to the Cover Attachment Detail.
5) **Refer to 111362 Tubing Kit** for connecting tubing.
6) Fasten offset bolt brackets with talk tube to posts using $^3/_4$" O.D. x .390" spacers and $^3/_8$" x 1 $^1/_8$" BHCS w/pin with $^3/_8$" SAE flat washers. See Attachment To Post Details.
7) Backfill trench to top of subgrade.
8) Install protective surfacing before users are allowed to play on the structure.

Specifications are subject to change without notice.

ECO #0101832 Document #26966900 replaces #22580200. Talk tube change from RS20 to RS40.

landscape structures®

ISO 14001 CERTIFIED

ISO 9001 Certified

SAFETY NOTE

Choose a protective surfacing material that has a Critical Height Value of at least the height of the Highest Accessible Part/Fall Height of the adjacent equipment. (Ref. ASTM F1487.)

16756200

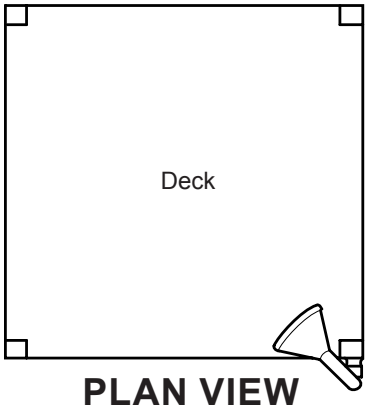

PLAN VIEW

DETAIL
COVER ATTACHMENT

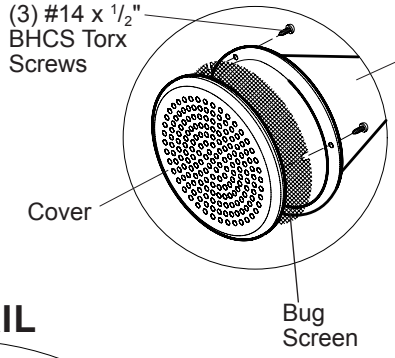

DETAIL

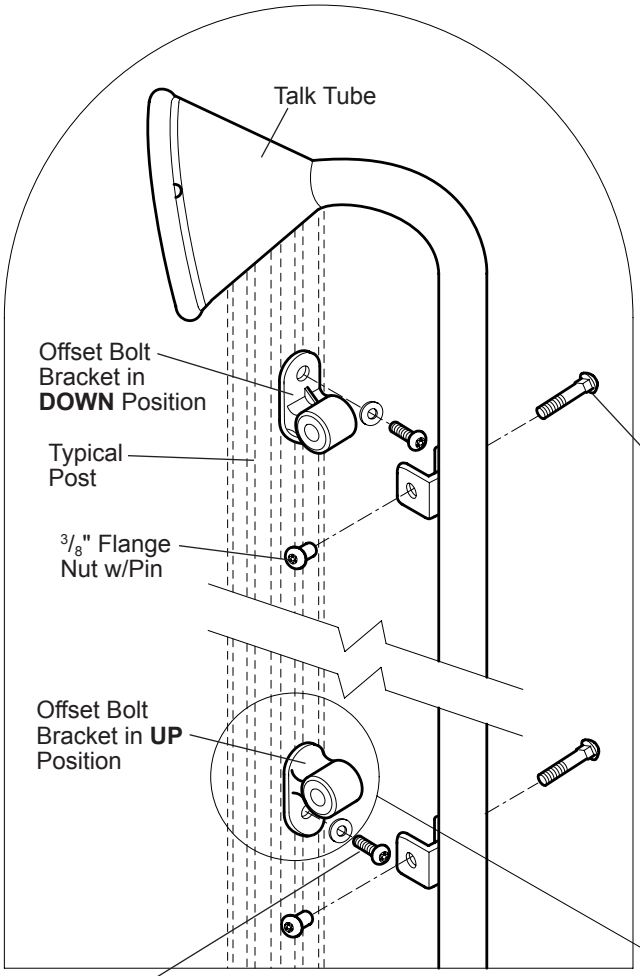

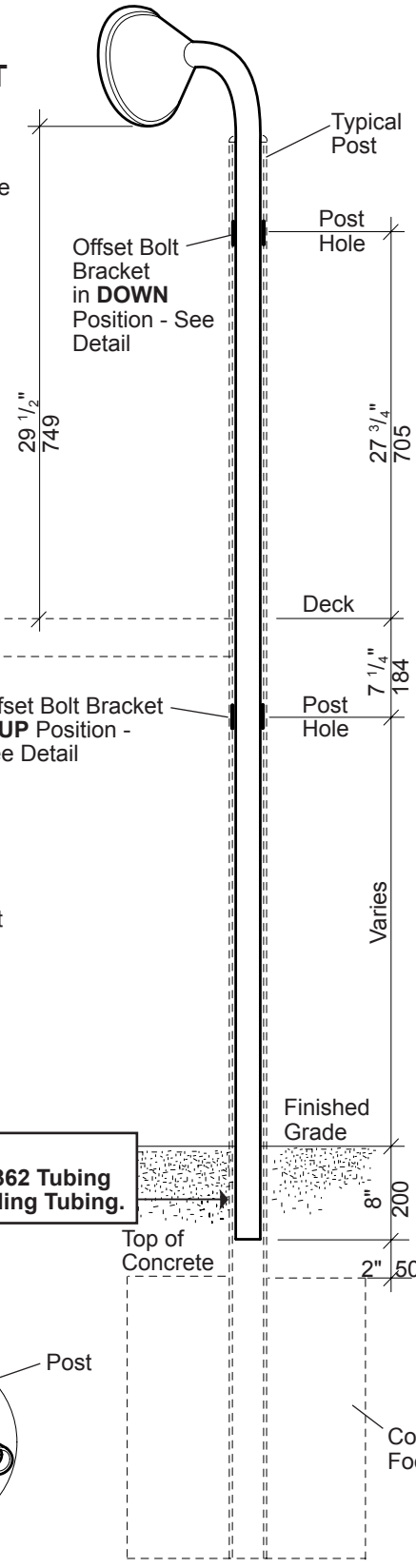

NOTE:
Refer to 111362 Tubing Kit for Installing Tubing.

NOTE: Insert spacers into posts before attaching offset bolt brackets.

DETAIL

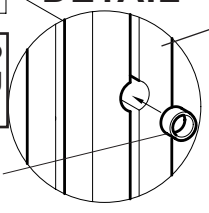

PlayShaper® 115198 Talk Tubes, Deck Mount

601 7TH STREET SOUTH, DELANO, MINNESOTA 55328-8605 888-574-4678 LSI Install Help 888-438-6574 LSI Direct 763-972-5200 Int. FAX (763) 972-3185

© 2017 by Landscape Structures. All rights reserved.

PlayShaper® 115198 Talk Tubes, Deck Mount

Parts List

Part#	Description	Qty.
113895	Offset Bolt Bracket, Specify Color	2
176965	Talk Tube, 8" Deck, Specify Color	1
146351	Talk Tube, 12" Deck, Specify Color	1
146349	Talk Tube, 16" Deck, Specify Color	1
146352	Talk Tube, 18" Deck, Specify Color	1
146348	Talk Tube, 24" Deck, Specify Color	1
146353	Talk Tube, 30" Deck, Specify Color	1
146347	Talk Tube, 32" Deck, Specify Color	1
146354	Talk Tube, 36" Deck, Specify Color	1
146345	Talk Tube, 40" Deck, Specify Color	1
146346	Talk Tube, 48" Deck, Specify Color	1
132388	**Talk Tube Hardware Package**	1
100148	3/8" x 1 3/4" Carriage Bolt, SST	2
100198	3/8" x 1 1/8" BHCS w/Pin, SST	2
100353	3/8" Flange Nut w/Pin, SST	2
100365	3/8" SAE Flat Washer, SST	2
166868	3/4" O.D. x .390" Spacer, Aluminum	2
146168	**Talk Tube Cover Hardware Package**	1
129671	#14 x 1/2" BHCS Torx, SST	3
145134	Talk Tube Cover, Black	1
127463	Bit Hex TPP T-27 (Torx)	1
146528	Bug Screen	1

Specifications

Talk Tube: Weldment comprised of 1.600" O.D. RS20 (.085" - .095") galvanized steel tubing, 14 GA. (.079") cold rolled steel sheet zinc plate, and 3/16" HRPO steel sheet. Finish: ProShield®, color specified.

Talk Tube Cover: Solid color Permalene®, Black in color.

Bug Screen: 18 x 16 Weave .011 Ga. charcoal fiberglass screen.

Offset Bolt Brkt: Cast from 369.1 aluminum alloy. Finish: ProShield, color specified.

Fasteners: Primary fasteners shall be socketed and pinned tamperproof in design, stainless steel (SST) per ASTM F 879 unless otherwise indicated (see specific product installation/specifications).

Installation Time: Approx. 1/2 man hour per talk tube
Area Req: 6' (1,83 m) minimum use zone
Weight: Talk Tube 8" Deck - 14 lbs.
Talk Tube 12" Deck - 15 lbs.
Talk Tube 16" Deck - 16 lbs.
Talk Tube 18" Deck - 16 lbs.
Talk Tube 24" Deck - 17 lbs.
Talk Tube 30" Deck - 18 lbs.
Talk Tube 32" Deck - 18 lbs.
Talk Tube 36" Deck - 19 lbs.
Talk Tube 40" Deck - 19 lbs.
Talk Tube 48" Deck - 20 lbs.

Installation Instructions

1) Determine placement of talk tubes. Refer to your plan drawing. Maximum distance apart is 40 feet.
2) Dig a trench into subgrade between the two footings for placement of plastic tubing.
3) Attach offset bolt brackets to talk tubes using 3/8" x 1 3/4" carriage bolts and 3/8" flange nuts w/pin. **NOTE:** *Upper attachment uses bolt bracket flipped in **DOWN** position. Lower attachment uses bracket flippen in **UP** position. See Detail.*
4) Attach talk tube cover and bug screen to talk tube using #14 x 1/2" torx screws. Refer to the Cover Attachment Detail.
5) **Refer to 111362 Tubing Kit** for connecting tubing.
6) Fasten offset bolt brackets with talk tube to posts using 3/4" O.D. x .390" spacers and 3/8" x 1 1/8" BHCS w/pin with 3/8" SAE flat washers. See Details.
7) Backfill trench to top of subgrade.
8) Install protective surfacing before users are allowed to play on the structure.

Specifications are subject to change without notice.

ECO 0100996 Document 22581000 replaces 17696600.Changed Talk Tube Cover Color.

landscape structures®

ISO 14001 CERTIFIED

ISO 9001 Certified

SAFETY NOTE

Choose a protective surfacing material that has a Critical Height Value of at least the height of the Highest Accessible Part/Fall Height of the adjacent equipment. (Ref. ASTM F1487.)

20076700

DETAIL
SADDLE SPINNER SEAT ASSEMBLY

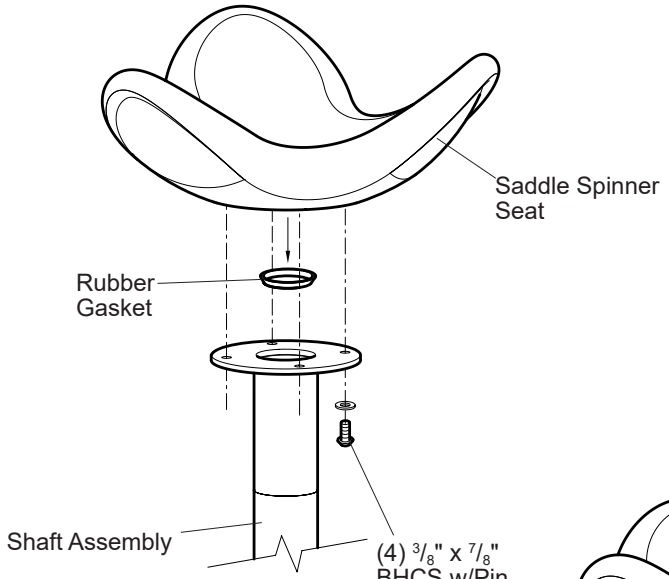

NOTE: Install Rubber Gasket with small diameter down.

DETAIL
MINIMUM USE ZONE

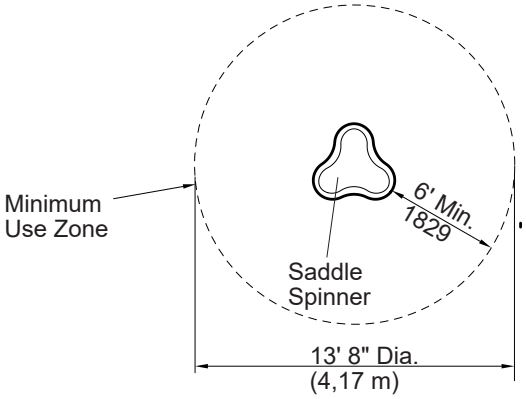

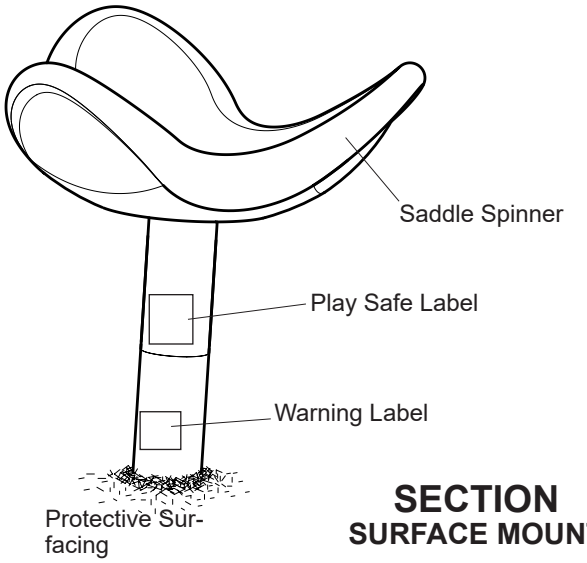

DETAIL
DIRECT BURY

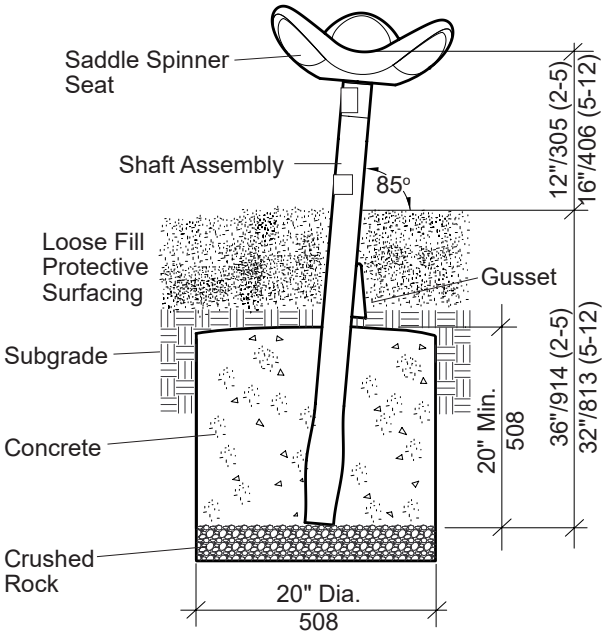

SECTION
SURFACE MOUNT

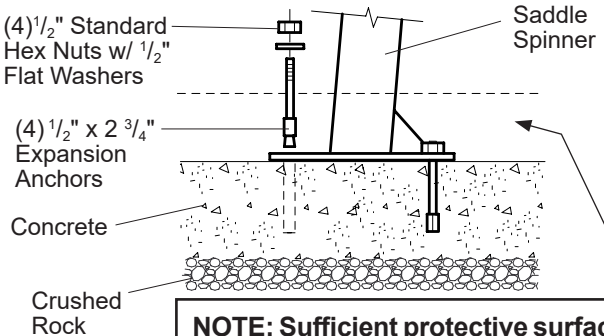

NOTE: Sufficient protective surfacing must cover hardware to satisfy fall height requirements.

Kids In Motion 152179 Saddle Spinner

601 7TH STREET SOUTH, DELANO, MINNESOTA 55328-8605 888-574-4678 LSI Install Help 888-438-6574 LSI Direct 763-972-5200 Int. FAX (763) 972-3185

© 2020 by Landscape Structures. All rights reserved.

Kids In Motion 152179 Saddle Spinner

Parts List

Part #	Description	Qty.
151539	Saddle Spinner Seat, Specify Color	1
197017	Shaft Assy., DB, Specify Color	*
247018	Shaft Assy. 12" Seat Height, SM, Specify Color	*
197011	Shaft Assy. 16" Seat Height, SM, Specify Color	*
211418	**Spinner Seat Hardware Package**	1
100196	$^{3}/_{8}$" x $^{7}/_{8}$" BHCS w/Pin, SST	4
100365	$^{3}/_{8}$" SAE Flat Washer, SST	4
156845	Play Safe Label, 2-5 Yrs.	1
156847	Play Safe Label, 5-12 Yrs.	1
127935	$^{5}/_{16}$" x 2 $^{15}/_{32}$" Rubber Gasket	1
183064	Warning label	1
121348	**4-Hole (SM) Hardware Package**	1
100266	$^{1}/_{2}$" x 2 $^{3}/_{4}$" Expansion Anchor	4
100322	$^{1}/_{2}$" Standard Hex Nut, SST	4
100363	$^{1}/_{2}$" Flat Washer, SST	4

*** = Quantity Determined By Your Order**
DB = Direct Bury
SM = Surface Mount

Specifications

Shaft Assembly: **(Saddle Spinner Seat Post)** Weldment comprised of 2.875" O.D. RS40 (.160"-.170" Wall) galvanized steel tubing, 1.250" O.D. steel shaft, 12 Ga. (.105") HR flat steel, and 1144 steel collar. Finish: Pro-Shield®, color specified. **(Sleeve/Plate)** Weldment comprised of $^{1}/_{4}$" sheet HRPO steel and 2.875" O.D. schedule 80 steel tubing. Finish: ProShield, color specified.

Rubber Gasket: Made from 50 durometer neoprene.

Saddle Spinner Seat: Rotationally molded from U.V. stabilized linear low density polyethylene measuring 18 $^{1}/_{4}$" wide x 7" high, color specified.

Fasteners: Primary fasteners shall be socketed and pinned tamperproof in design, stainless steel (SST) per ASTM F 879 unless otherwise indicated (see specific product installation/specifications).

Installation Time: 1 man hour **(DB)**
$^{3}/_{4}$ man hour **(SM)**
Weight: 36 lbs. **(DB)**
30 lbs. 12" Seat Height **(SM)**
32 lbs. 16" Seat Height **(SM)**
Area Req.: 13' 8" (4,17 m) diameter
Min. Use Zone.: 6' (1,83 m)
Concrete: Approx. 3 $^{1}/_{2}$ cu. ft. **(DB)**
Fall Height: 12" (300 mm) 2-5 Years
16" (410 mm) 5-12 Years

Installation

1) **(Direct Bury)** Dig footing as shown. Refer to the Direct Bury Detail.

2) Attach saddle spinner seat and rubber gasket to shaft assembly using $^{3}/_{8}$" x $^{7}/_{8}$" BHCS w/pin and $^{3}/_{8}$" SAE flat washers. Refer to the Saddle Spinner Seat Attachment Detail. **NOTE:** *Install Rubber Gasket with small diameter down.*

3) **(Direct Bury)** Place the shaft assembly in footing hole. Place a level on the shaft assembly gusset, when gusset is plumb pour concrete footing. Allow concrete footing to cure a minimum of 72 hours before users are allowed to play on structure. **NOTE**: *Saddle spinner will have to be propped in position, until concrete has cured.*

   (Surface Mount) Drill $^{1}/_{2}$" x 3" deep holes through base plate using hammer drill and $^{1}/_{2}$" masonry bit. Tap expansion anchors into drilled holes. Attach shaft assembly base plate to expansion anchors using $^{1}/_{2}$" standard hex nuts with $^{1}/_{2}$" flat washers.

4) If required to meet Canadian Standard (CSA Z614) requirement for water ponding, drill (3) $^{1}/_{8}$" diameter drain holes on top side of seat, and (3) $^{1}/_{8}$" diameter holes on bottom side of seat. **NOTE:** *Positions are prelocated on both sides of seat with an indent marking. Use caution to drill through one wall of plastic only.*

5) Apply labels as shown.

6) Install protective surfacing before users are allowed to play on the structure.

Specifications are subject to change without notice.

Eco #0101909 Document #27401700 replaces #21141900. Part number change for shaft assembly 12"..

landscape structures®

ISO 14001 CERTIFIED

ISO 9001 Certified

SAFETY NOTE

Choose a protective surfacing material that has a Critical Height Value of at least the height of the Highest Accessible Part/Fall Height of the adjacent equipment. (Ref. ASTM F1487.)

12982200

PLAN VIEW

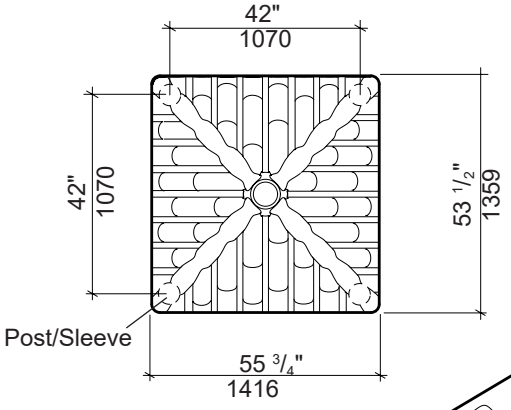

DETAIL
BOLT CAP ASSEMBLY
(FOR NO LOGO PANEL OPTION)

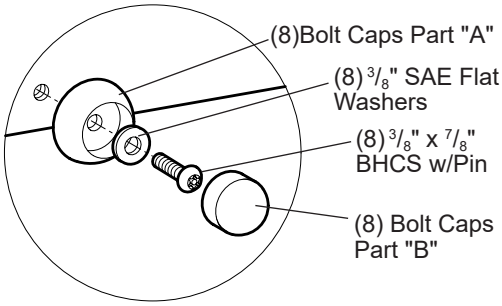

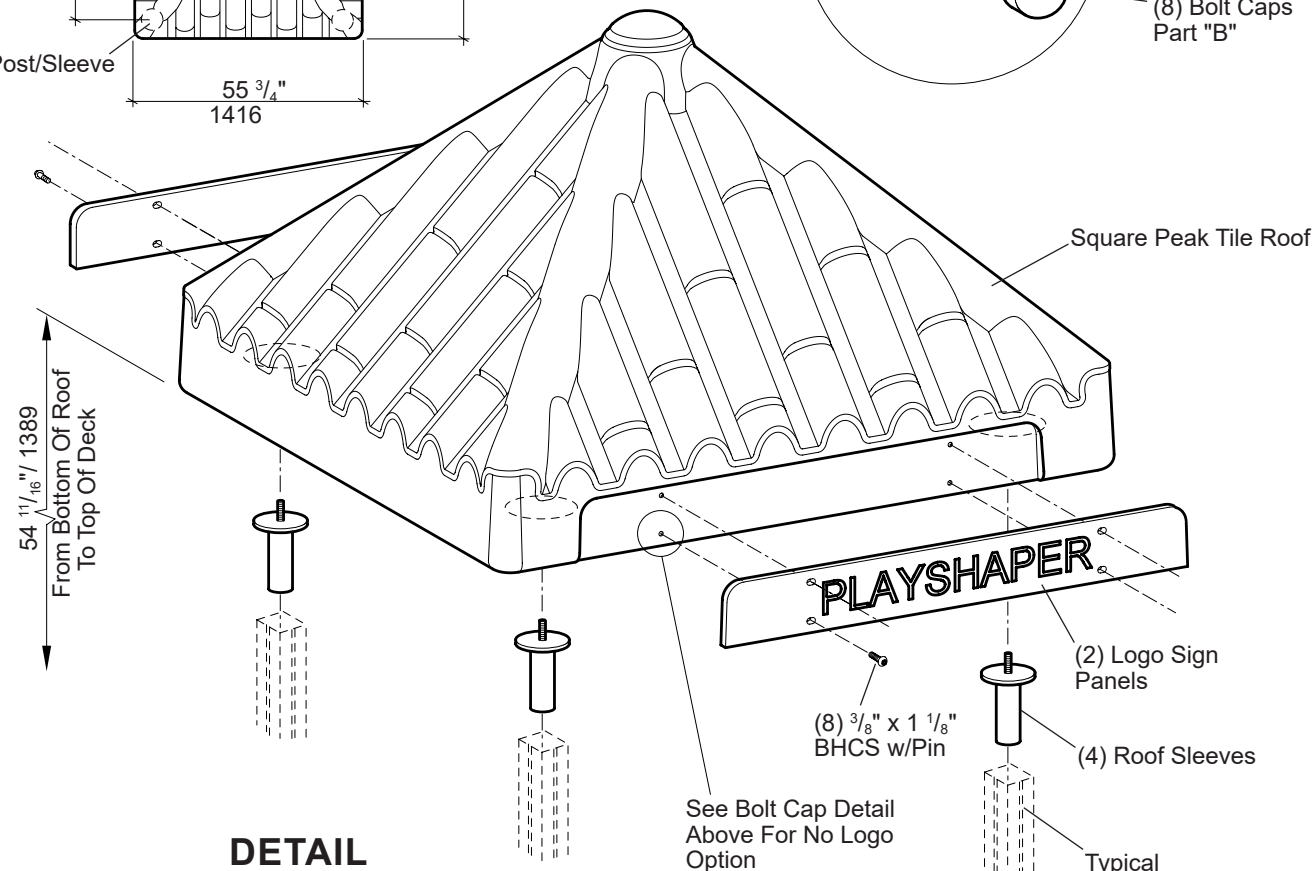

DETAIL
ROOF SLEEVE/ DRIVE RIVET ATTACHMENT

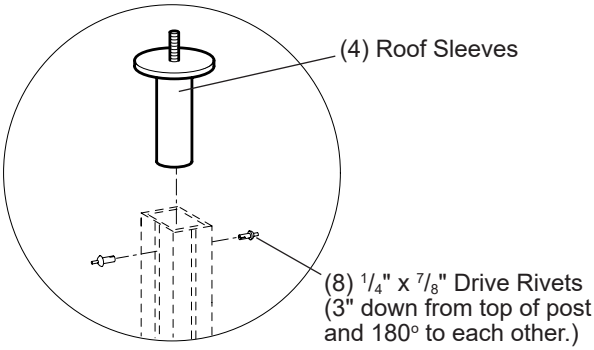

NOTE: Optional logo lettering available. Limit 15 characters including spaces.

PlayShaper® 179229 Square Peak Tile Roof

601 7TH STREET SOUTH, DELANO, MINNESOTA 55328-8605 888-574-4678 LSI Install Help 888-438-6574 LSI Direct 763-972-5200 Int. FAX (763) 972-3185

© 2011 by Landscape Structures. All rights reserved.

PlayShaper® 179229 Square Peak Tile Roof

Parts List

Part#	Description	Qty.
128451	Square Peak Tile Roof, Specify Color	1
127801	Roof Logo, Specify Color	2
118175	Roof Sleeve, Specify Color	4
128189	**Roof (With Logo) Hardware Package**	1
100198	$^3/_8$" x 1 $^1/_8$" BHCS w/Pin, SST	8
100613	$^1/_4$" x $^7/_8$" Drive Rivet, AL	8
128190	**Roof (With Out Logo) Hardware Package**	1
100196	$^3/_8$" x $^7/_8$" BHCS w/Pin, SST	8
100365	$^3/_8$" SAE Flat Washer, SST	8
100613	$^1/_4$" x $^7/_8$" Drive Rivet, AL	8
108184	Bolt Cap Part A	8
108185	Bolt Cap Part B	8

Specifications

Square Peak Tile Roof: Rotationally molded from U.V. stabilized linear low density polyethylene. Roof measures 53 $^1/_2$" x 55 $^3/_4$" x 34 $^3/_8$" high, color specified.

Roof Logo: Two color Permalene® logo measures 41" wide x 5 $^1/_8$" high, color specified.

Roof Sleeve: Cast from 319 almag. Finish: ProShield® color specified.

Fasteners: Primary fasteners shall be socketed and pinned tamperproof in design, stainless steel (SST) per ASTM F 879 unless otherwise indicated (see specific product installation/specifications).

Installation Time: Approx. 2 man hours

Weight: With Logo - 105 lbs.
Without Logo - 93 lbs.

Installation Instructions

1) Turn roof sleeves onto roof. Refer to the Roof Sleeve/Drive Rivet Attachment Detail.

2) **(With Roof Logo)** Attach roof logo to roof using $^3/_8$" x 1 $^1/_8$" BHCS w/pin, as shown.

   (Without Roof Logo) Attach bolt cap assembly to roof using bolt cap part "A", $^3/_8$" SAE flat washer and fasten with $^3/_8$" x $^7/_8$" BHCS w/pin. Snap bolt cap part "B" onto bolt cap part "A". Refer to the Bolt Cap Assembly Detail.

3) With two people minimum, lift roof into position and insert roof sleeves into posts.

4) Drill $^1/_4$" holes through roof sleeves using the predrilled $^1/_4$" holes in posts as a guide. Insert $^1/_4$" x $^7/_8$" drive rivets into drilled holes and tap pin in until it is flush with rivet head. Refer to the Roof Sleeve/Drive Rivet Attachment Detail.

5) Install protective surfacing before users are allowed to play on the structure.

Specifications are subject to change without notice.

landscape structures®

ISO 14001 CERTIFIED

ISO 9001 Certified

SAFETY NOTE

Choose a protective surfacing material that has a Critical Height Value of at least the height of the Highest Accessible Part/Fall Height of the adjacent equipment. (Ref. ASTM F1487.)

18384200

TOP VIEW

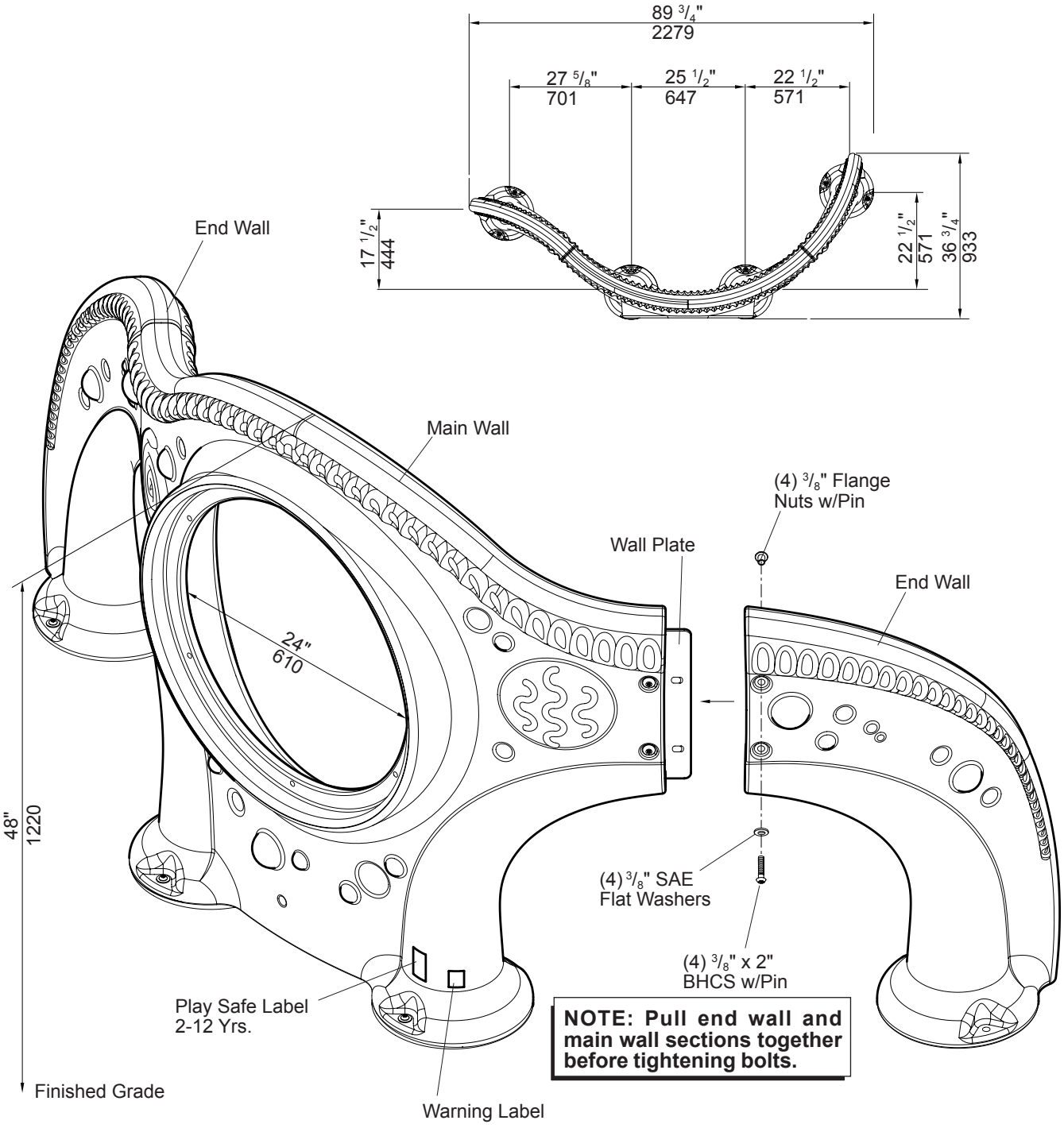

Sensory Play

Sensory Play Center®

601 7TH STREET SOUTH, DELANO, MINNESOTA 55328-8605 888-574-4678 LSI Install Help 888-438-6574 LSI Direct 763-972-5200 Int. FAX (763) 972-3185

© 2012 by Landscape Structures. All rights reserved.

Parts List

Part#	Description	Qty.
	Model #168100	
166757	Sensory Roto Main Wall, Specify Color	1
167219	Wall Mount Plate Footer, (DB), Specify Color	*
	Model #168101	
166758	Sensory Roto End Wall, Specify Color	1
167219	Wall Mount Plate Footer, (DB), Specify Color	*
	Model #168661	
167186	Sensory Wall Plate, Specify Color	1
169036	**Attachment Plate Hardware Package**	1
100353	3/8" Flange Nuts w/Pin, SST	4
100365	3/8" SAE Flat Washer, SST	4
100173	3/8" x 2" BHCS w/Pin, SST	4
169179	**2-Hole Play Center End (DB) Hardware Pkg.**	1
100321	3/8" Patch Hex Nut, SST	2
100362	3/8" Flat Washer, SST	4
123224	3/8" x 1 11/16" BHCS w/Pin, SST	2
183890	**4-Hole Play Center Wall (DB) Hardware Pkg.**	1
100321	3/8" Patch Hex Nut, SST	4
100362	3/8" Flat Washer, SST	8
123224	3/8" x 1 11/16" BHCS w/Pin, SST	4
156846	Play Safe Label 2-12 Yrs.	1
183064	Warning Label	1
169174	**2-Hole Play Center End (SM) Hardware Pkg.**	1
100263	3/8" x 2 3/4" Expansion Anchors	2
100264	3/8" x 5" Expansion Anchors	2
100327	3/8" Standard Hex Nut, SST	2
100362	3/8" Flat Washer, SST	2
169172	1 1/8" O.D. x 2" Long Spacer Tube, AL	2
183891	**4-Hole Play Center Wall (SM) Hardware Pkg.**	1
100263	3/8" x 2 3/4" Expansion Anchors	4
100264	3/8" x 5" Expansion Anchors	4
100327	3/8" Standard Hex Nut, SST	4
100362	3/8" Flat Washer, SST	4
169172	1 1/8" O.D. x 2" Long Spacer Tube, AL.	4
156846	Play Safe Label 2-12 Yrs.	1
183064	Warning Label	1

*** = Quantity Determined By Your Order**
DB = Direct Bury
SM - Surface Mount

Specifications

Walls: Rotationally molded from U.V. stabilized linear low-density polyethylene, color specified.

Wall Plate: Fabricated from 1/4" HRPO steel plate. Finish: ProShield®, color specified.

Wall Mount Plate Footer: Weldment comprised of 2.375" O.D. RS20 (.095"-.105") wall galvanized steel tubing and 1/4" HRPO steel plate. Finish: ProShield, color specified.

Fasteners: Primary fasteners shall be socketed and pinned tamperproof in design, stainless steel (SST) per ASTM F 879 unless otherwise indicated (see specific product installation/specifications).

Installation Time:
Main Wall **(DB)** 1 1/4 man hours
End Wall **(DB)** 3/4 man hour
Main Wall **(SM)** 1 1/4 man hours
End Wall **(SM)** 3/4 man hour

Weight:
Main Wall **(DB)** 88 lbs.
Main Wall **(SM)** 54 lbs.
End Wall **(DB)** 38 lbs.
End Wall **(SM)** 21 lbs.

Concrete: **(DB)** Approx. 1.31 cu. ft. per hole

Specifications are subject to change without notice.

Installation Instructions

(Direct Bury)

1) Refer to the Site Plan for footing locations.
2) Insert wall plate into main wall and attach, using 3/8" x 2" BHCS w/pin with 3/8" SAE flat washers and 3/8" flange nuts w/pin. Connect end wall to wall plate, using 3/8" x 2" BHCS w/pin with 3/8" SAE flat washers and 3/8" flange nuts w/pin.
3) Attach wall mount plate footers to wall sections, using 3/8" x 1 11/16" BHCS w/pin with 3/8" flat washers and 3/8" patch hex nuts with 3/8" flat washers. Refer to the Direct Bury Detail. **NOTE:** *Pull end wall and main wall sections together before tightening bolts.*
4) With Sensory wall sections in position and plumb, pour concrete footings. Allow concrete to cure a minimum of 72 hours before allowing users to play on the structure.
5) Apply labels as shown.
6) Install protective surfacing before users are allowed to play on the structure. **NOTE:** *When a Sensory Play Center is installed in a playground environment, protective surfacing is required.*

(Surface Mount Without Protective Surfacing)

1) Insert wall plate into main wall and attach, using 3/8" x 2" BHCS w/pin with 3/8" SAE flat washers and 3/8" flange nuts w/pin. Connect end wall to wall plate, using 3/8" x 2" BHCS w/pin with 3/8" SAE flat washers and 3/8" flange nuts w/pin. **NOTE:** *Pull end wall and main wall sections together before tightening bolts.*
2) With Sensory wall sections in position, mark anchor bolt locations on the concrete slab (through wall section holes). Move wall sections aside. Drill 3/8" x 3" deep holes, using a hammer drill and 3/8" masonry bit.
3) Reposition wall sections. Tap 3/8" x 2 3/4" expansion anchors into drilled holes. Fasten wall sections to 3/8" x 2 3/4" expansion anchors, using 3/8" standard hex nuts with 3/8" flat washers. Refer to the Surface Mount Without Protective Surfacing Detail.
4) Apply labels as shown.

(Surface Mount With Protective Surfacing)

1) Insert wall plate into main wall and attach, using 3/8" x 2" BHCS w/pin with 3/8" SAE flat washers and 3/8" flange nuts w/pin. Connect end wall to wall plate, using 3/8" x 2" BHCS w/pin with 3/8" SAE flat washers and 3/8" flange nuts w/pin. **NOTE:** *Pull end wall and main wall sections together before tightening bolts.*
2) With Sensory wall sections in position, mark anchor bolt locations on the concrete slab (through wall section holes). Move wall sections aside. Drill 3/8" x 3" deep holes, using a hammer drill and 3/8" masonry bit.
3) Reposition wall sections with 1 1/8" O.D. x 2" long spacer tubes in between bottom of wall sections and concrete slab. Tap 3/8" x 5" expansion anchors into drilled holes. Fasten wall sections to 3/8" x 5" expansion anchors, using 3/8" standard hex nuts with 3/8" flat washers. Refer to the Surface Mount With Protective Surfacing Detail.
4) Apply labels as shown.
5) Install protective surfacing before users are allowed to play on the structure. **NOTE:** *When a Sensory Play Center is installed in a playground environment, protective surfacing is required.*

Eco #54517 Document #18384200 replaces #16871200. Added warning labels to hardware packages.

landscape structures®

SAFETY NOTE

Choose a protective surfacing material that has a Critical Height Value of at least the height of the Highest Accessible Part/Fall Height of the adjacent equipment. (Ref. ASTM F1487.)

168712a

DETAIL
DIRECT BURY

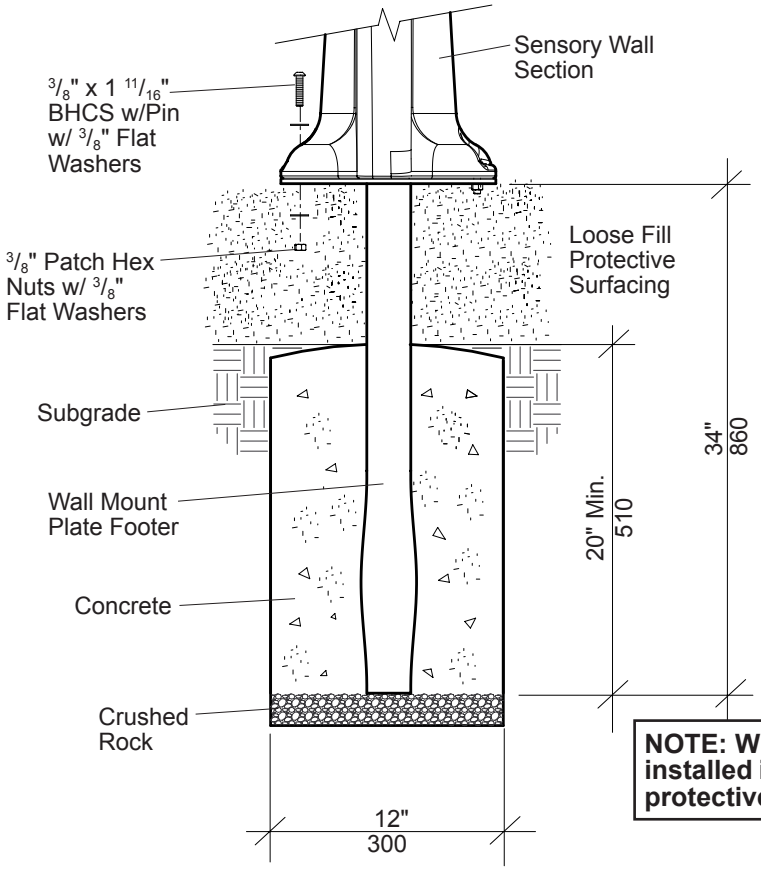

NOTE: When a Sensory Play Center is installed in a playground environment, protective surfacing is required.

DETAIL
SURFACE MOUNT (WITHOUT PROTECTIVE SURFACING)

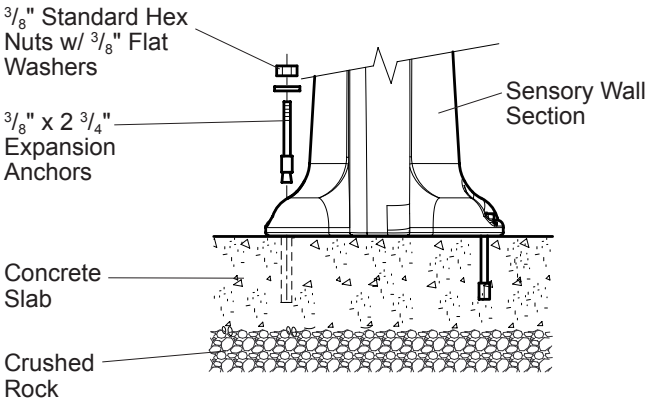

DETAIL
SURFACE MOUNT (WITH PROTECTIVE SURFACING)

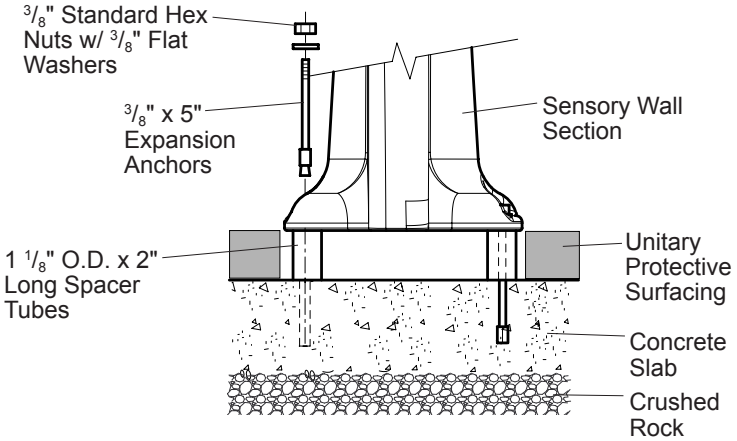

Sensory Play

Sensory Play Center®

601 7TH STREET SOUTH, DELANO, MINNESOTA 55328-8605 888-574-4678 LSI Install Help 888-438-6574 LSI Direct 763-972-5200 Int. FAX (763) 972-3185

© 2012 by Landscape Structures. All rights reserved.

Document #18384200

landscape structures®

ISO 14001 CERTIFIED

ISO 9001 Certified

SAFETY NOTE

Choose a protective surfacing material that has a Critical Height Value of at least the height of the Highest Accessible Part/Fall Height of the adjacent equipment. (Ref. ASTM F1487.)

21054200

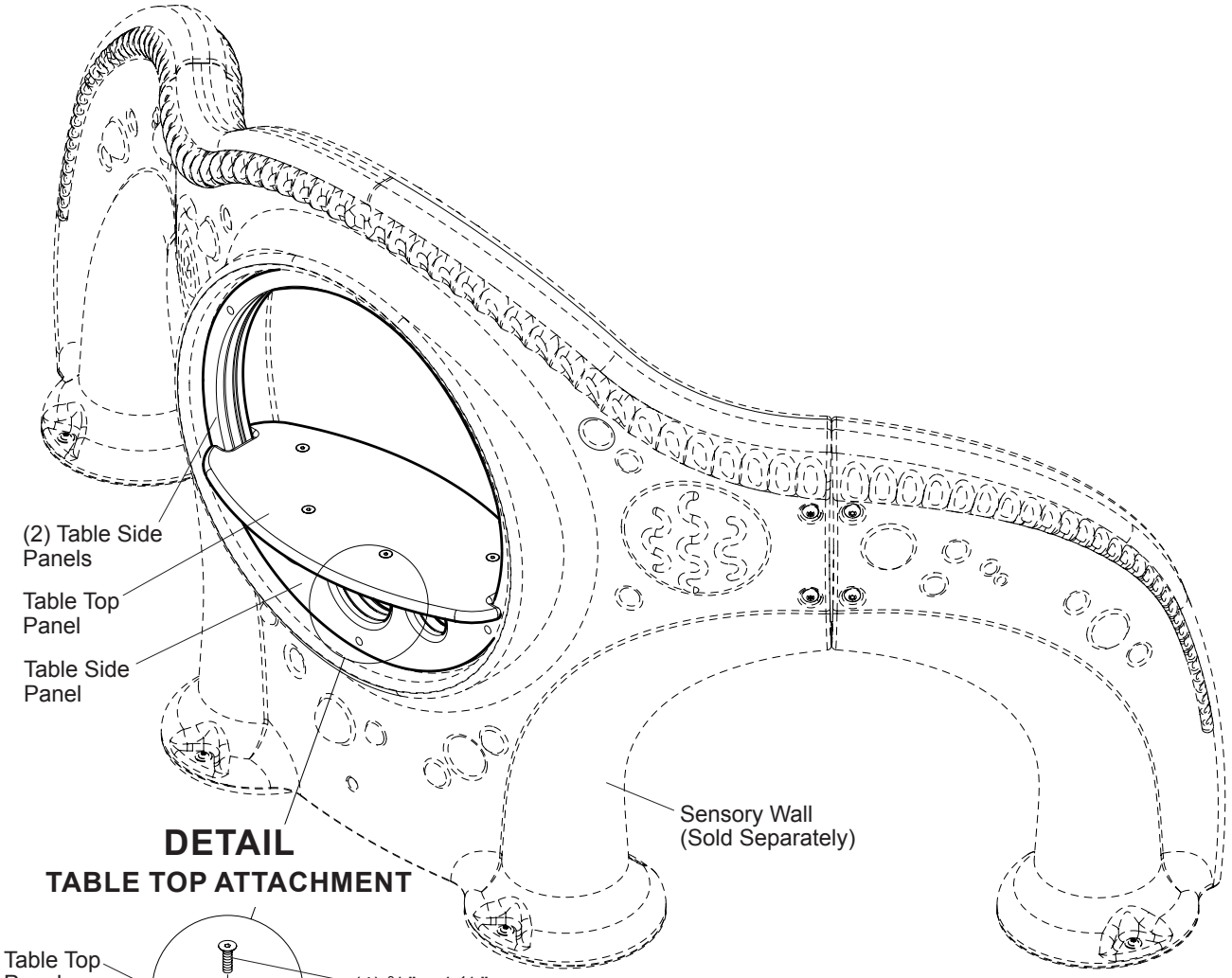

DETAIL
TABLE TOP ATTACHMENT

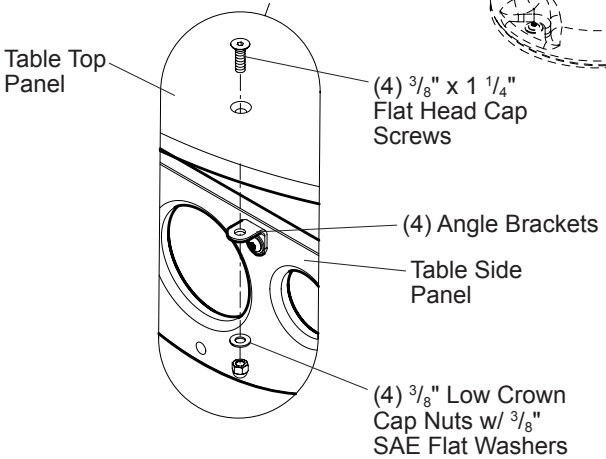

Sensory Play

168105 Imagination Table

601 7TH STREET SOUTH, DELANO, MINNESOTA 55328-8605 888-574-4678 LSI Install Help 888-438-6574 LSI Direct 763-972-5200 Int. FAX (763) 972-3185

© 2015 by Landscape Structures. All rights reserved.

Sensory Play 168105 Imagination Table

Parts List

Part#	Description	Qty.
167171	Table Top Panel, Color Specified	1
167807	Insert Panel, Color Specified	1
167172	Table Side Panel, Color Specified	2
210557	**Imagination Table Hardware Package**	1
100173	$^3/_8$" x 2" BHCS w/Pin, SST	6
100199	$^3/_8$" x 2 $^1/_4$" BHCS w/Pin, SST	4
100252	$^3/_8$" x 1 $^1/_4$" FHCS, SST	4
100349	$^3/_8$" Low Crown Cap Nut, SST	4
100353	$^3/_8$" Flange Nut w/Pin, SST	10
100365	$^3/_8$" SAE Flat Washer, SST	14
188664	Steel Angle Bracket, Silver	4

Specifications

Permalene® Panels: Two color panel, color specified.

Fasteners: Primary fasteners shall be socketed and pinned tamperproof in design, stainless steel (SST) per ASTM F 879 unless otherwise indicated (see specific product installation/specifications).

Installation Time: $^3/_4$ man hour

Weight: 20 lbs.

Installation Instructions

1) Attach insert panel and table side panels to sensory wall, using $^3/_8$" x 2" BHCS w/pin with $^3/_8$" SAE flat washers and $^3/_8$" flange nuts w/ pin. Attach angle brackets to table side panels and insert panel, using $^3/_8$" x 2 $^1/_4$" BHCS w/pin with $^3/_8$" SAE flat washers and $^3/_8$" flange nuts w/ pin. Refer to the Insert Panel Attachment Detail.

2) Attach table top panel to angle brackets, using $^3/_8$" x 1 $^1/_4$" flat head cap screws and $^3/_8$" low crown cap nuts with $^3/_8$" SAE flat washers. Refer to Detail.

Specifications are subject to change without notice.

Eco #0100358 Document #21054200 replaces #18868800. Replaced hardware package.

landscape structures®

DETAIL
INSERT PANEL ATTACHMENT

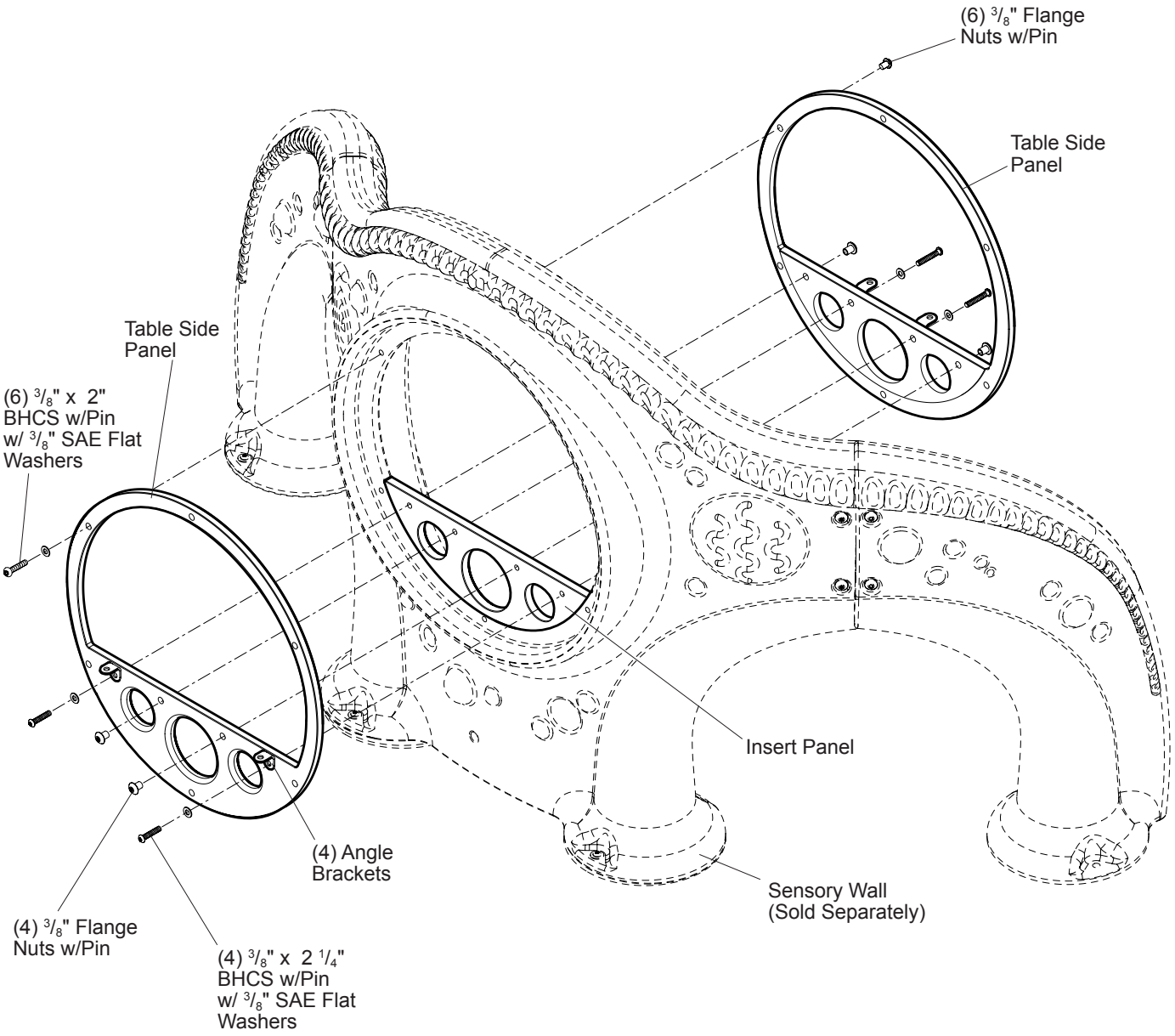

Sensory Play

168105 Imagination Table

601 7TH STREET SOUTH, DELANO, MINNESOTA 55328-8605 888-574-4678 LSI Install Help 888-438-6574 LSI Direct 763-972-5200 Int. FAX (763) 972-3185

© 2015 by Landscape Structures. All rights reserved.

Document #21054200

landscape structures®

ISO 14001 CERTIFIED

ISO 9001 Certified

SAFETY NOTE

Choose a protective surfacing material that has a Critical Height Value of at least the height of the Highest Accessible Part/Fall Height of the adjacent equipment. (Ref. ASTM F1487.)

181287

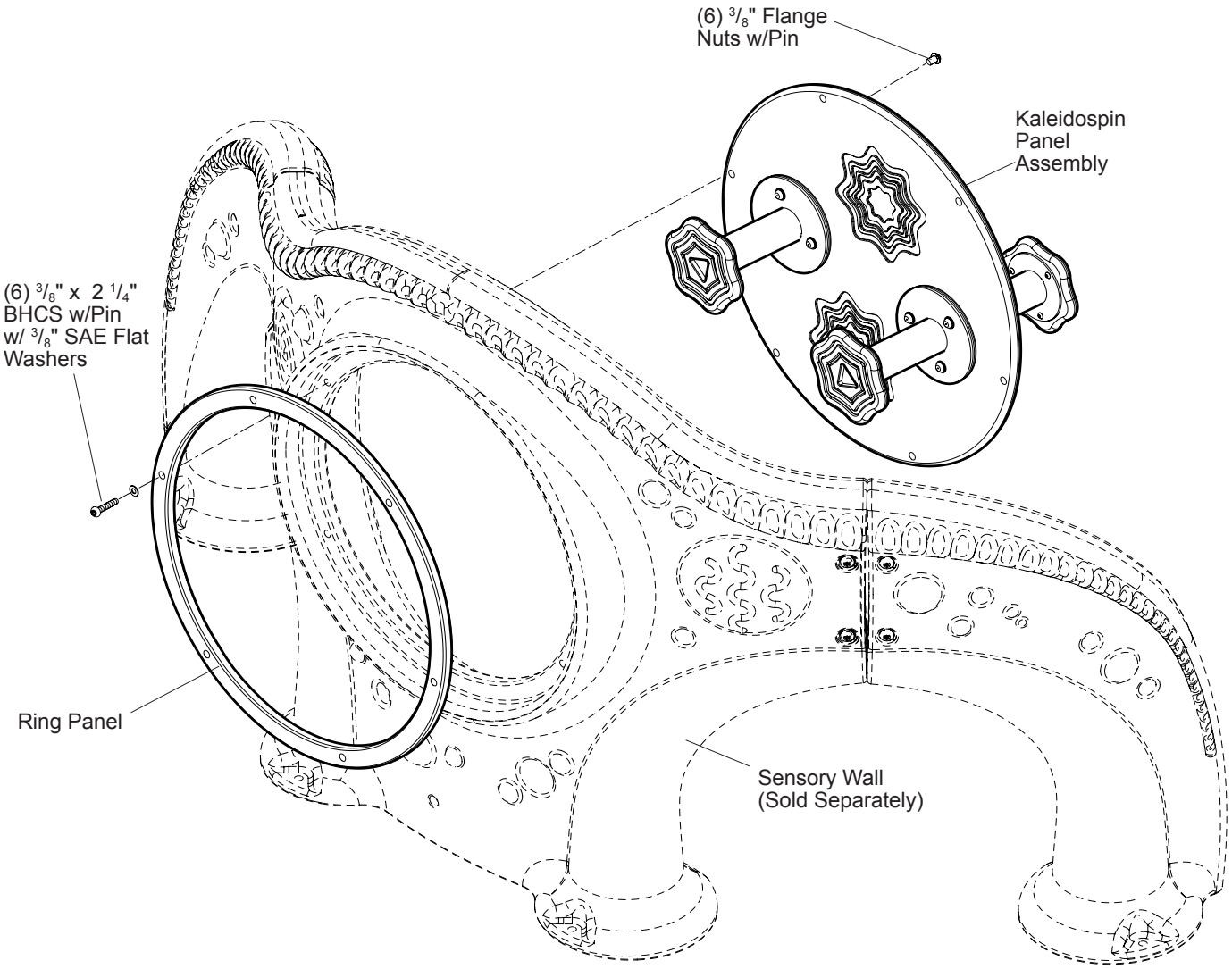

Sensory Play

168108 Kaleidospin Panel®

601 7TH STREET SOUTH, DELANO, MINNESOTA 55328-8605 888-574-4678 LSI Install Help 888-438-6574 LSI Direct 763-972-5200 Int. FAX (763) 972-3185

© 2011 by Landscape Structures. All rights reserved.

Sensory Play 168108 Kaleidospin Panel®

Parts List

Part#	Description	Qty.
181245	Kaleidoscope Panel Assembly, Specify Color	1
167014	Ring Panel, Specify Color	1
169033	**Sensory Panel Hardware Package**	1
100199	$^3/_8$" x 2 $^1/_4$" BHCS w/Pin, SST	6
100353	$^3/_8$" Flange Nut w/Pin, SST	6
100365	$^3/_8$" SAE Flat Washer, SST	6

Specifications

Kaleidoscope Panel Assembly: (Panels) Two color Permalene® panels, color specified. (Tubes) Weldment comprised of 2.375" O.D. RS40 (.130"-.140") galvanized tubing and 7 GA. (.179") sheet HRPO steel. Finish: ProShield®, color specified. (Mirror) Fabricated from 22 GA. (.030") stainless steel sheet.

Panels: Two color Permalene panel, color specified.

Fasteners: Primary fasteners shall be socketed and pinned tamperproof in design, stainless steel (SST) per ASTM F 879 unless otherwise indicated (see specific product installation/specifications).

Installation Time: $^1/_2$ man hour

Weight: 53 lbs.

Installation Instructions

1) Attach kaleidospin panel assembly to sensory wall, using ring panel, $^3/_8$" x 2 $^1/_4$" BHCS w/Pin with $^3/_8$" SAE flat washers and $^3/_8$" flange nuts with pin.

Specifications are subject to change without notice.

Eco #54398 Document #18128700 replaces #16871000. Removed ring panel from assembly.

landscape structures®

ISO 14001 CERTIFIED

ISO 9001 Certified

SAFETY NOTE

Choose a protective surfacing material that has a Critical Height Value of at least the height of the Highest Accessible Part/Fall Height of the adjacent equipment. (Ref. ASTM F1487.)

16871300

DETAIL
BONGO ATTACHMENT

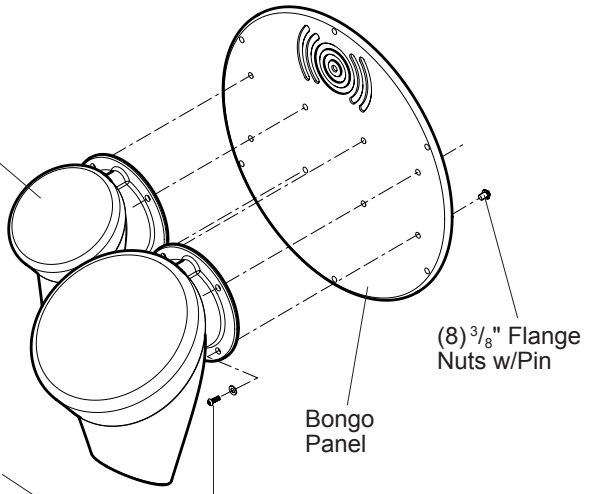

DETAIL
XYLOFUN PANEL ASSEMBLY

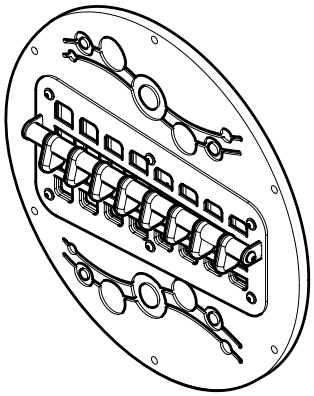

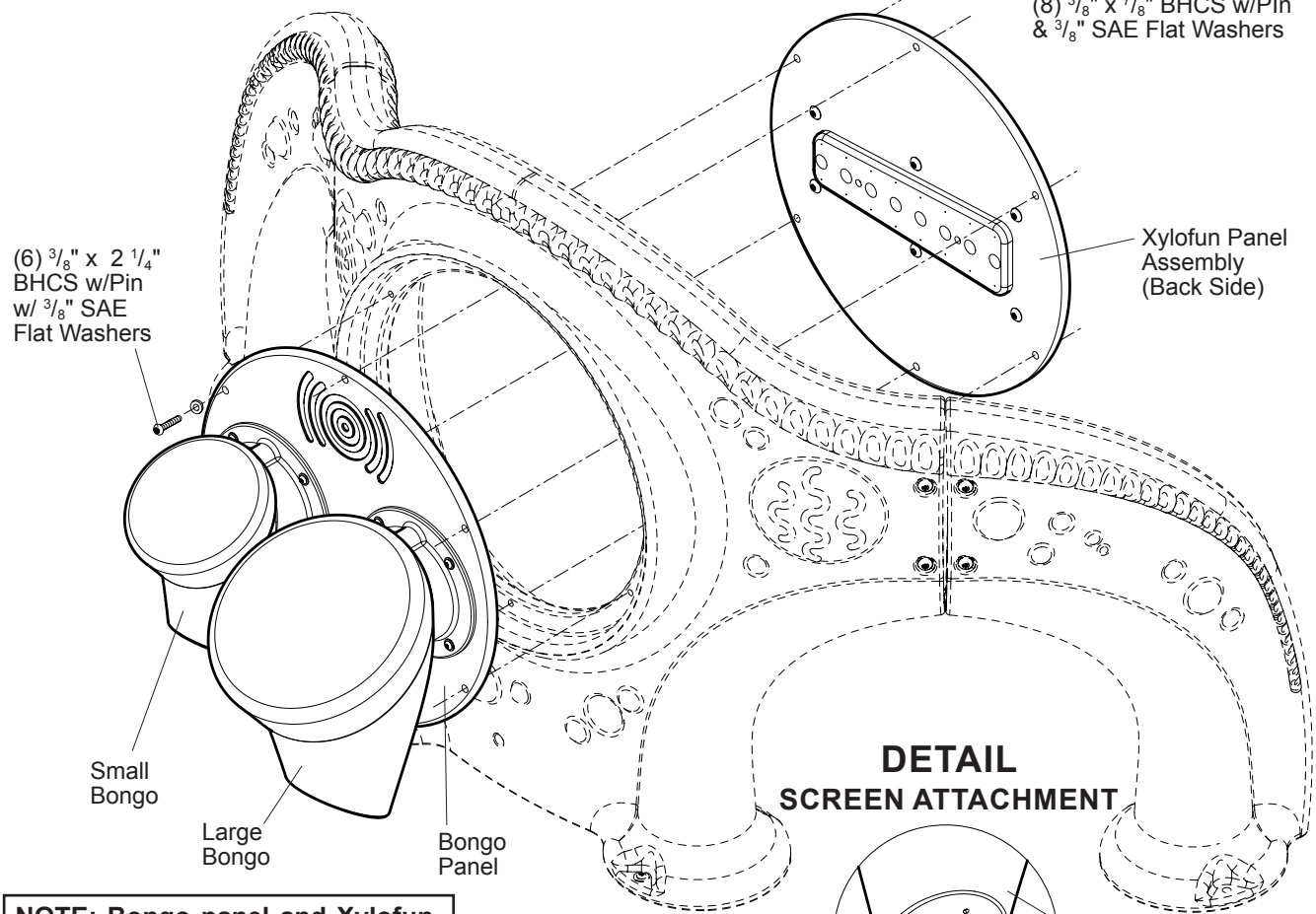

NOTE: Bongo panel and Xylofun panel assembly can be mounted on either side of the Sensory Wall.

DETAIL
SCREEN ATTACHMENT

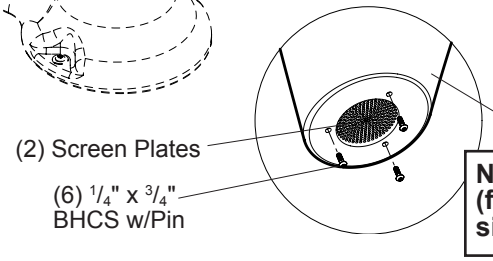

NOTE: Screen plates attach (flat side to flat side) to inside of Bongos.

Sensory Play 168666 Bongo and Xylofun Panel®

601 7TH STREET SOUTH, DELANO, MINNESOTA 55328-8605 888-574-4678 LSI Install Help 888-438-6574 LSI Direct 763-972-5200 Int. FAX (763) 972-3185

© 2017 by Landscape Structures. All rights reserved.

Document #22731300

Sensory Play 168666 Bongo and Xylofun Panel®

Parts List

Part#	Description	Qty.
163911	Small Bongo, Specify Color	1
163912	Large Bongo, Specify Color	1
167537	Bongo Panel, Specify Color	1
169062	Xylofun Panel Assembly, Specify Color	1
164523	Screen Plate, Black	2
168715	**Sensory Panel Hardware Package**	1
100196	3/8" x 7/8" BHCS w/Pin, SST	8
100199	3/8" x 2 1/4" BHCS w/Pin, SST	6
100353	3/8" Flange Nut w/Pin, SST	14
100365	3/8" SAE Flat Washer, SST	14
162374	1/4" x 3/4" BHCS w/Pin, SST	6
127463	T-27 Torx Hex Bit	1

Specifications

Bongo Panel: Recycled Permalene® panel, color specified.

Xylofun Panel Assy.: Recycled Permalene panels, 1/8" thick steel, .125" O.D. aluminum tube and 1/2" threaded steel rod, color specified.

Bongos: Rotationally molded from U.V. stabilized linear low density polyethylene, color specified.

Screen Plate: Fabricated from 12 GA. (.105") HRPO flat steel. Finish: ProShield®, black in color.

Fasteners: Primary fasteners shall be socketed and pinned tamperproof in design, stainless steel (SST) per ASTM F 879 unless otherwise indicated (see specific product installation/specifications).

Installation Time: 3/4 man hour
Weight: 55 lbs.

Installation Instructions

1) Attach screen plates to bongos, using 1/4" x 3/4" BHCS w/pin. Refer to the Screen Attachment Detail. **NOTE:** *Screen plates attach (flat side to flat side) to inside of Bongos.*

2) Attach Bongos to Bongo Panel using 3/8" x 7/8" BHCS w/pin with 3/8" SAE flat washers and 3/8" flange nuts w/pin. Refer to the Bongo Attachment Detail.

3) Attach bongo panel and xylofun panel assembly to sensory wall, using 3/8" x 2 1/4" BHCS w/Pin with 3/8" SAE flat washers and 3/8" flange nuts with pin. **NOTE:** *Bongo panel and xylofun panel assembly can be attached on either side of the Sensory Wall.*

Specifications are subject to change without notice.

Eco 0101023 Document 22731300 replaces 16871300. Changed two color permalene to recycled.

SAFETY NOTE

Choose a protective surfacing material that has a Critical Height Value of at least the height of the Highest Accessible Part/Fall Height of the adjacent equipment. (Ref. ASTM F1487.)

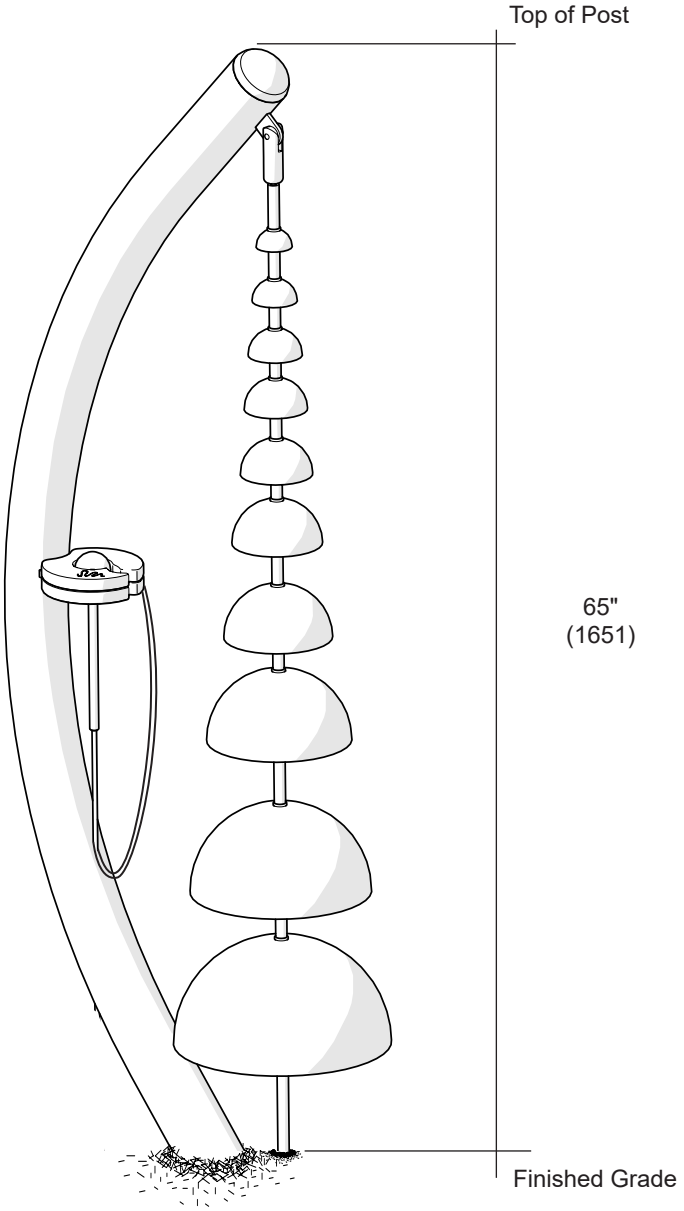

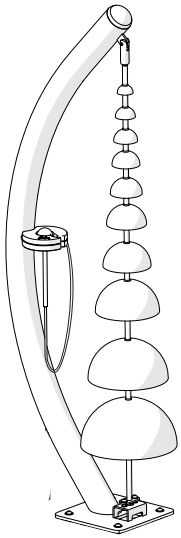

Rhapsody® 250340 Cascata™ Bells

601 7th Street South, Delano, Minnesota 55328-8605 888-574-4678 LSI Install Help 888-438-6574 LSI Direct 763-972-5200 Int. FAX (763) 972-3185
© 2020 by Landscape Structures. All rights reserved
Document #27316900

DETAIL
DIRECT BURY

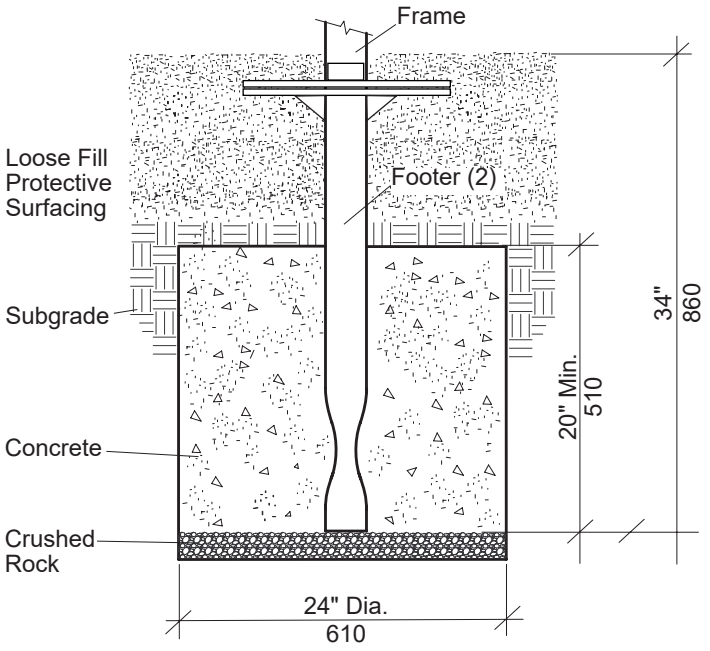

DETAIL
SURFACE MOUNT POST

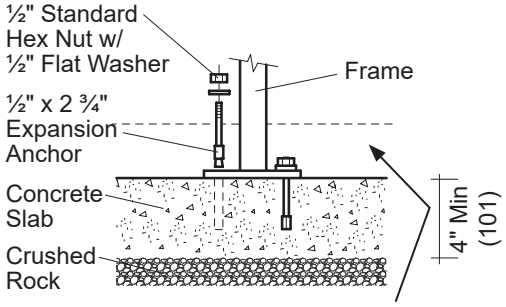

NOTE: Sufficient protective surfacing must cover hardware to satisfy fall height requirements.

DETAIL
DIRECT BURY POST

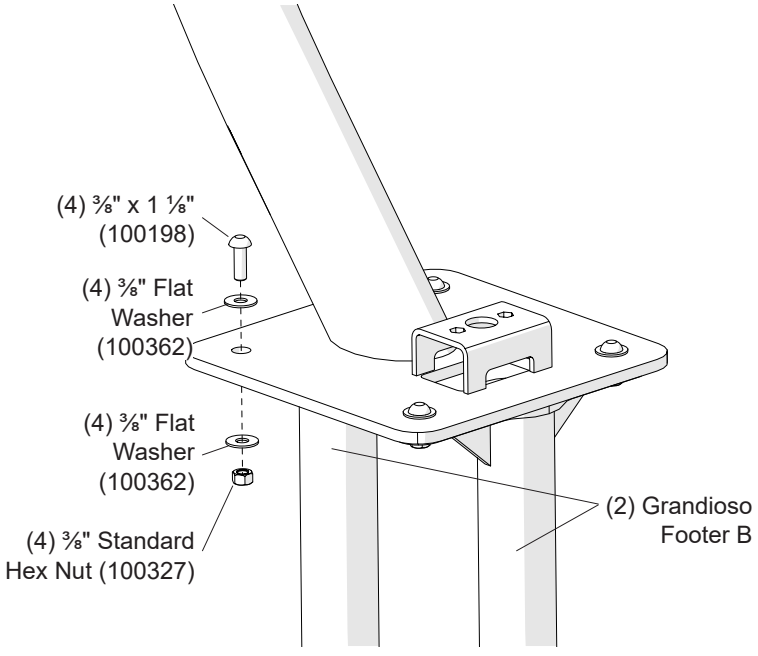

DETAIL
SURFACE MOUNT

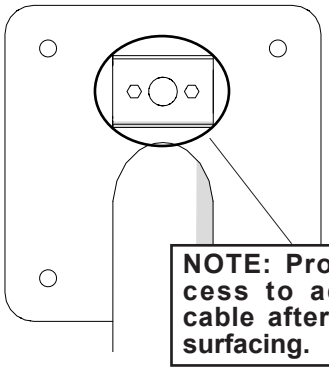

NOTE: Provide access to adjusting cable after pouring surfacing.

601 7th Street South, Delano, Minnesota 55328-8605 888-574-4678 LSI Install Help 888-438-6574 LSI Direct 763-972-5200 Int. FAX (763) 972-3185

© 2020 by Landscape Structures. All rights reserved

Document #27316900

landscape structures®

STEP 1

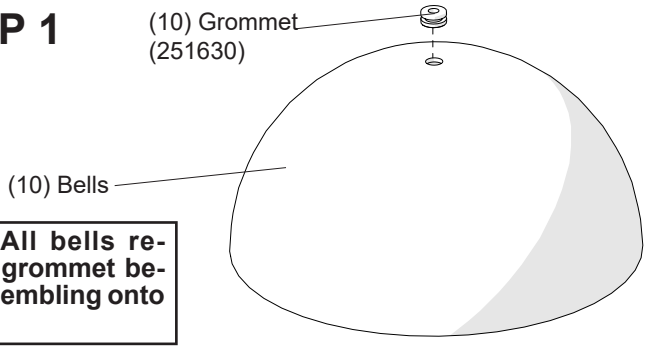

NOTE: All bells receive a grommet before assembling onto cable.

TYPICAL PART SEQUENCE

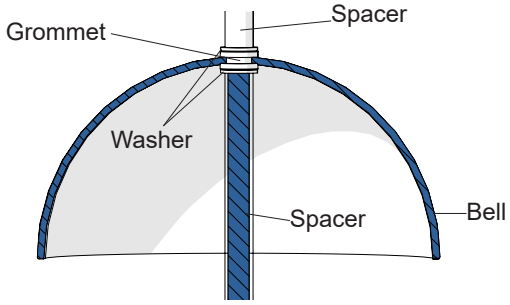

NOTE: Assemble bell tree upside down for ease of assembly.

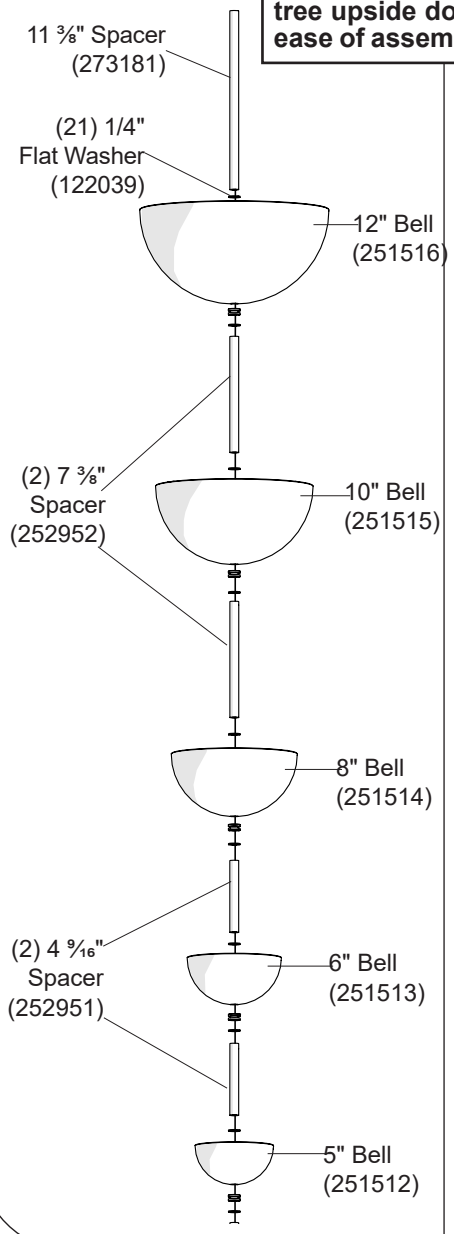

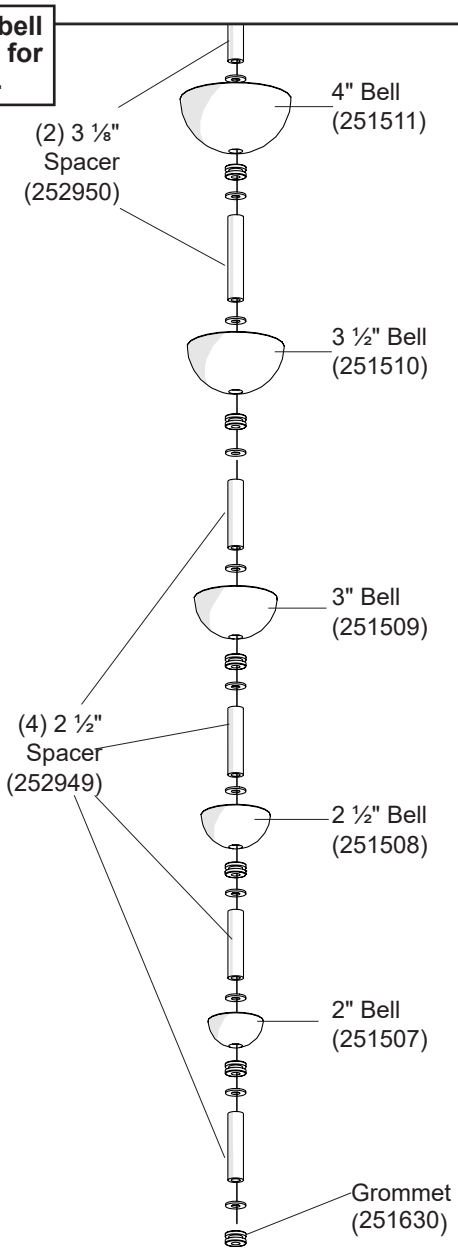

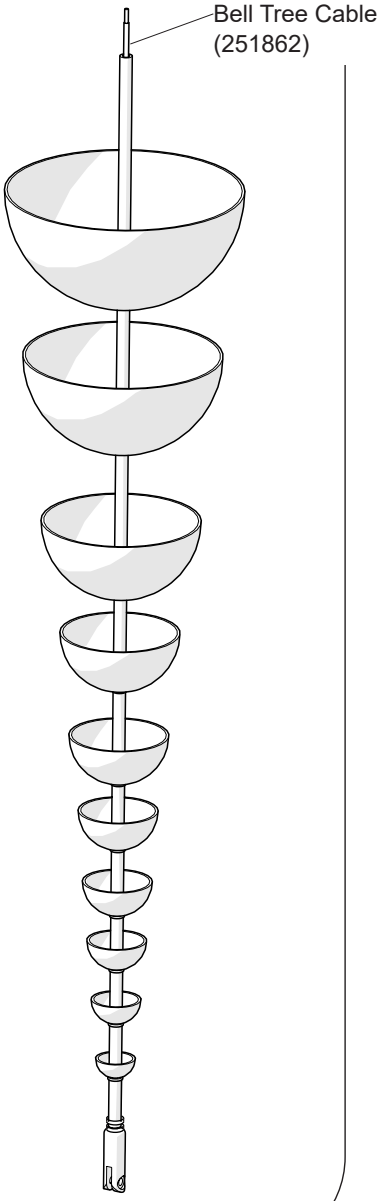

601 7th Street South, Delano, Minnesota 55328-8605 888-574-4678 LSI Install Help 888-438-6574 LSI Direct 763-972-5200 Int. FAX (763) 972-3185

© 2020 by Landscape Structures. All rights reserved

Document #27316900

landscape structures®

STEP 2

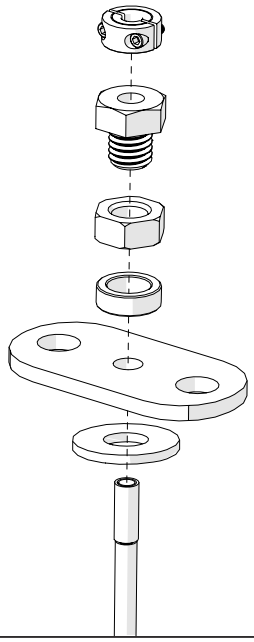

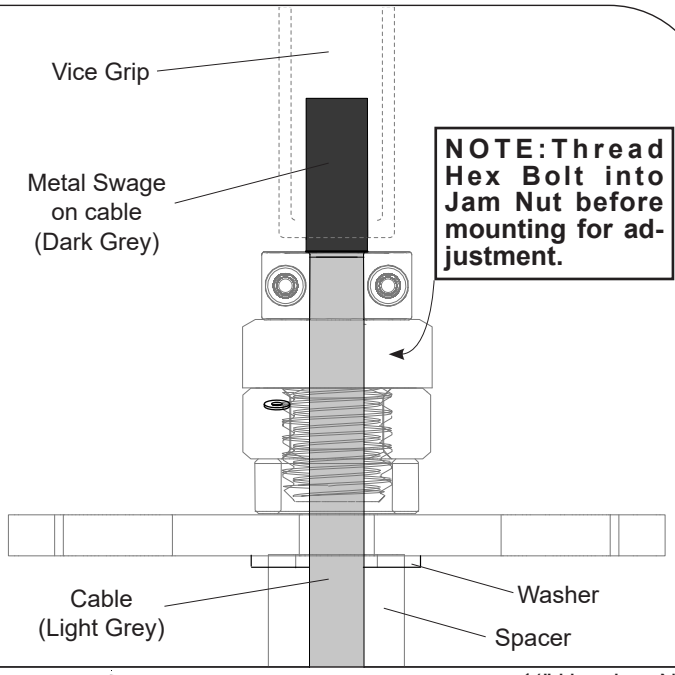

1x	Clamp Collar (251687)	1x	½" Hex Jam Nut (129693)
1x	½" - 13 x .5 Hex Bolt (251572)	1x	¾" x ¼" Spacer (176653)
1x	Tension Plate (248085)	1x	¼" Flat Washer (122039)

STEP 3

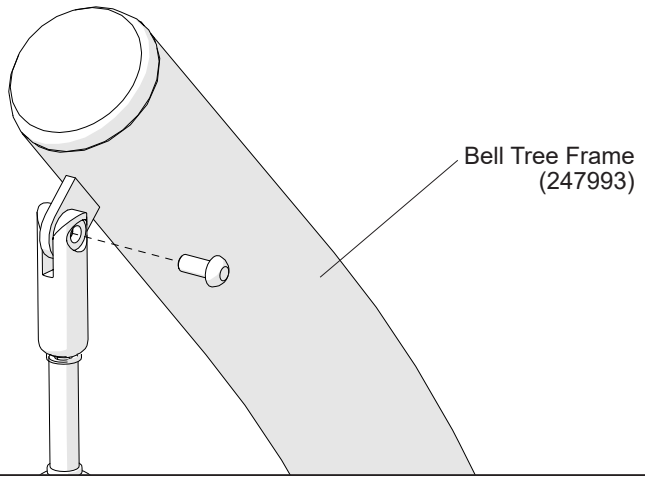

1x	LTHD $^{3}/_{8}$ x $^{7}/_{8}$" BHCS (100290)	1x	Bell Tree Assembly
1x	Bell Tree Frame (247993)		

601 7th Street South, Delano, Minnesota 55328-8605 888-574-4678 LSI Install Help 888-438-6574 LSI Direct 763-972-5200 Int. FAX (763) 972-3185

© 2020 by Landscape Structures. All rights reserved

Document #27316900

landscape structures®

https://bit.ly/2TfjWyZ

STEP 4

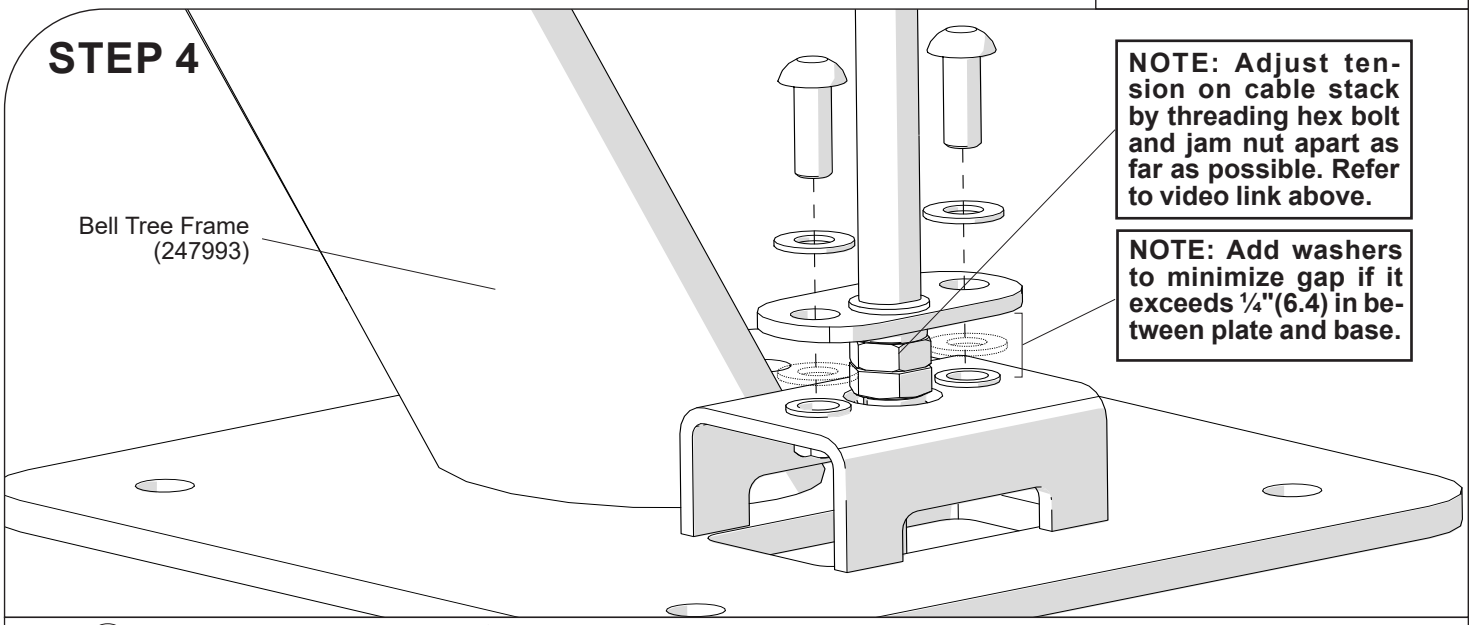

2x	3/8" SAE Flat Washer (100365)	2x	3/8 x 1 1/8" BHCS (100198)

STEP 5

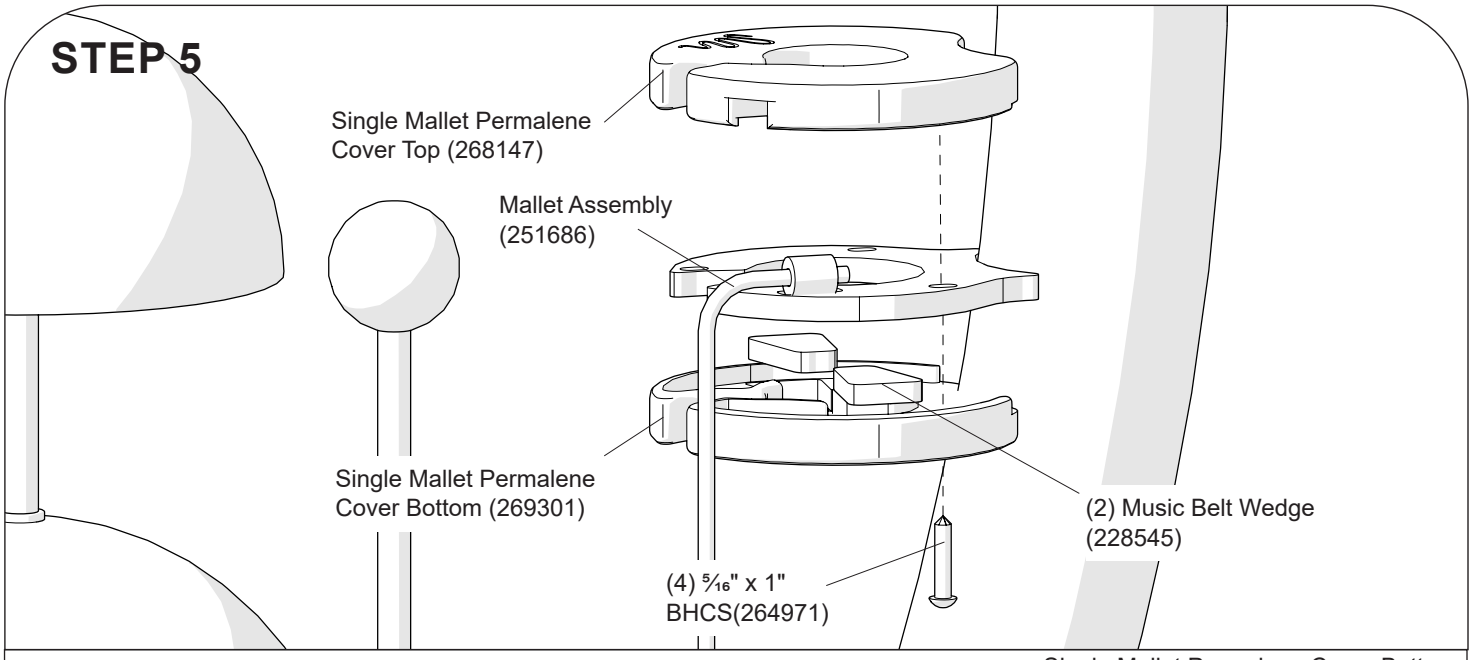

1x	Single Mallet Permalene Cover Top (268147)	1x	Single Mallet Permalene Cover Bottom (269301)
2x	Music Belt Wedge (228545)	1x	Mallet Assembly (251686)
4x	5/16" x 1" BHCS w/Pin (264971)		

601 7th Street South, Delano, Minnesota 55328-8605 888-574-4678 LSI Install Help 888-438-6574 LSI Direct 763-972-5200 Int. FAX (763) 972-3185

© 2020 by Landscape Structures. All rights reserved

Document #27316900

landscape structures®

250340 Cascata™ Bells
Rhapsody®

Parts List

Part#	Description	Qty.
213672	Grandioso Footer B, Specify Color	2
220676	Mallet ASM 75A Gray	1
268147	Single Mallet Perm Cover Top, Specify Color	1
269301	Single Mallet Perm Cover Bottom, Specify Color	1
247993	Cascata Bells Frame, Specify Color	1
248085	Cascata Bells Tension PL Specify Color	1
253930	**Cascata Bells Bell Set**	**1**
251507	2.00" Bell W/ Hole	1
251508	2.50" Bell W/ Hole	1
251509	3.00" Bell W/ Hole	1
251510	3.50" Bell W/ Hole	1
251511	4.00" Bell W/ Hole	1
251512	5.00" Bell W/ Hole	1
251513	6.00" Bell W/ Hole	1
251514	8.00" Bell W/ Hole	1
251515	10.00" Bell W/ Hole	1
251516	12.00" Bell W/ Hole	1
251862	Cascata Bells Cable	1
273186	**Cascata Bells Spacer Set**	**1**
252949	Cascata Bells Anodized Spacer 01, Black	4
252950	Cascata Bells Anodized Spacer 02, Black	2
252951	Cascata Bells Anodized Spacer 03, Black	2
252952	Cascata Bells Anodized Spacer 04, Black	2
273181	Cascata Bells Anodized Spacer 05, Black	1
273170	**Hdw Pkg Cascata™ Bells**	**1**
100198	BHCS 6LP 3/8 x 1-⅛" SST	2
100290	BHCS 6LP LTHD ⅜" x ⅞" SST	1
100365	Washer Flat SAE ⅜" SST	6
129693	Nut Hex Jam 1/2-13 SST	1
176653	Spacer ¾" x ¼" AL	1
228545	Music Belt Wedge	2
251572	1/2-13 x .5L Hex Bolt W/ Hole	1
251630	Push In Grommet	11
251687	¼" Two Piece Clamp Collar	1
127463	Bit Hex TPP T27 (Torx)	1
264971	5⁄16" x 1" BHCS w/Pin, SST	4
122039	Washer Flat ¼" x ¾"OD SST	22
207263	**Hdw Pkg DB Support**	**2**
100198	BHCS 6LP ⅜" x 1-⅛" SST	2
100327	Nut Hex STD ⅜"-16 SST	2
100362	Washer Flat ⅜" SST	4
121348	**Hdw Pkg 4-Hole SM 1/2-13**	**1**
100266	Exp Anchor ½" x 2-¾" ZP	4
100322	Nut Hex STD ½ - 13 SST	4
100363	Washer Flat ½" SST	4

DB= Direct Bury
SM= Surface Mount

Specifications

Fasteners: Primary fasteners shall be socketed and pinned tamperproof in design, stainless steel (SST) per ASTM F 879 unless otherwise indicated (see specific product installation/specifications).

Frame: Weldment comprised of 3.500" (88,9 mm) O.D. RS20 (.125")(3,17 mm) wall galvanized steel tubing, 1/4" stainless steel sheet and 3/8" (6,35 mm) thick HRPO steel sheet. Finish: ProShield®, color specified.

Mallet: Comprised of 2" (50,8 mm) diameter light gray polyurethane, 1/2" (12,7 mm) diameter aluminum handle and 3/16" (9,50 mm) stainless steel cable with nylon coating.

Footer: Weldment comprised of 2.375" (60,32 mm) O.D. RS20 (.095"-.105")(2,41 mm-2,66 mm) wall galvanized steel tubing, and 1/4" (6,35 mm) thick HRPO steel sheet. Finish: ProShield®, color specified.

Cables: Comprised of 3/16" (4,74 mm) diameter stainless steel cable with nylon coating.

Installation Time: Approx. 2 person hours
Weight: DB 73 lbs.
SM 57 lbs.
Concrete: 5.24 Cubic Feet DB

ECO #0101907 Document 27316900 replaces 26814000. Update washer location details

SAFETY NOTE

Choose a protective surfacing material that has a Critical Height Value of at least the height of the Highest Accessible Part/Fall Height of the adjacent equipment. (Ref. ASTM F1487.)

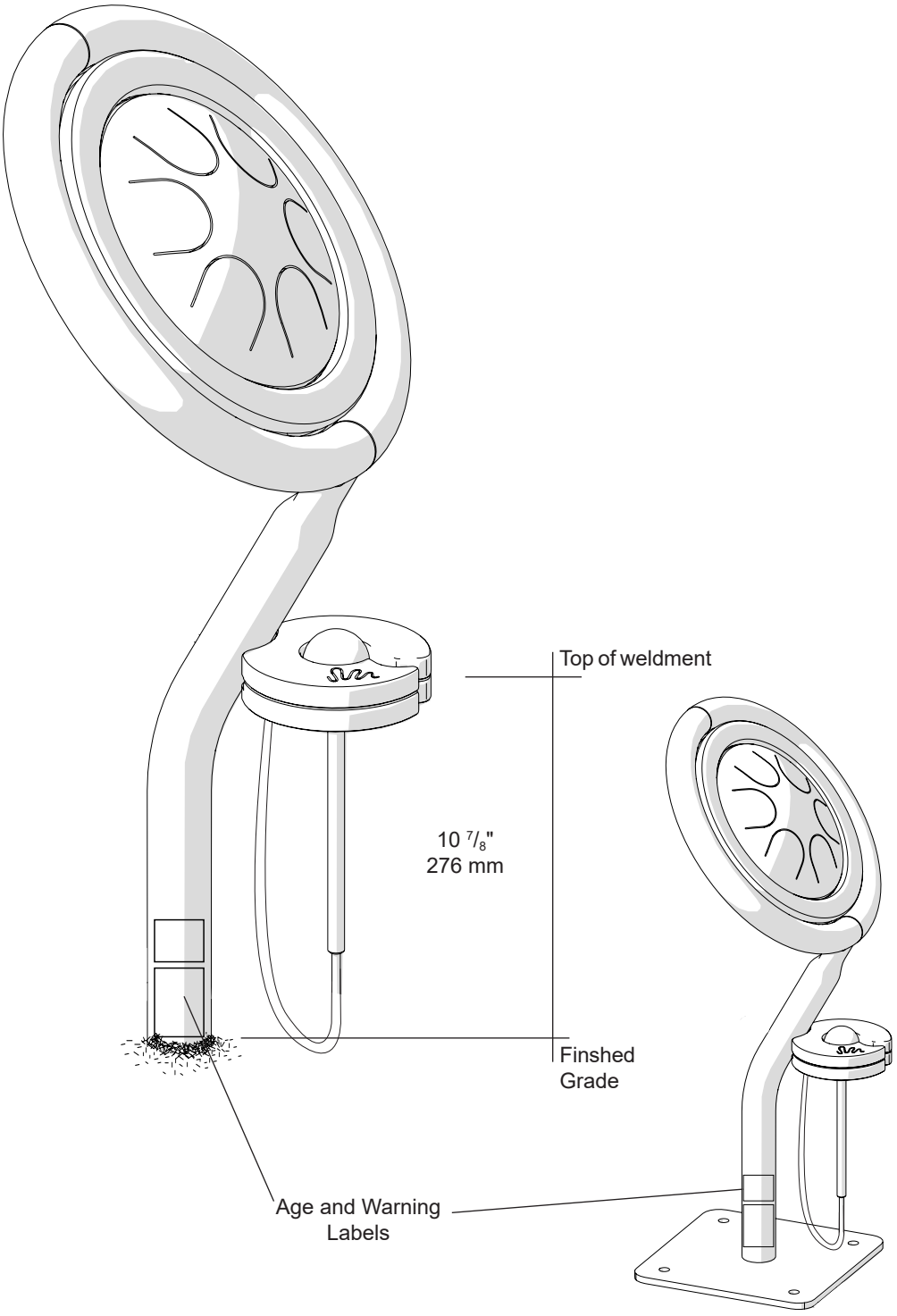

Rhapsody® 250341 Tongue Drum Junior w/ Mallet

601 7th Street South, Delano, Minnesota 55328-8605 888-574-4678 LSI Install Help 888-438-6574 LSI Direct 763-972-5200 Int. FAX (763) 972-3185
© 2020 by Landscape Structures. All rights reserved
Document #26814300

DETAIL
DIRECT BURY

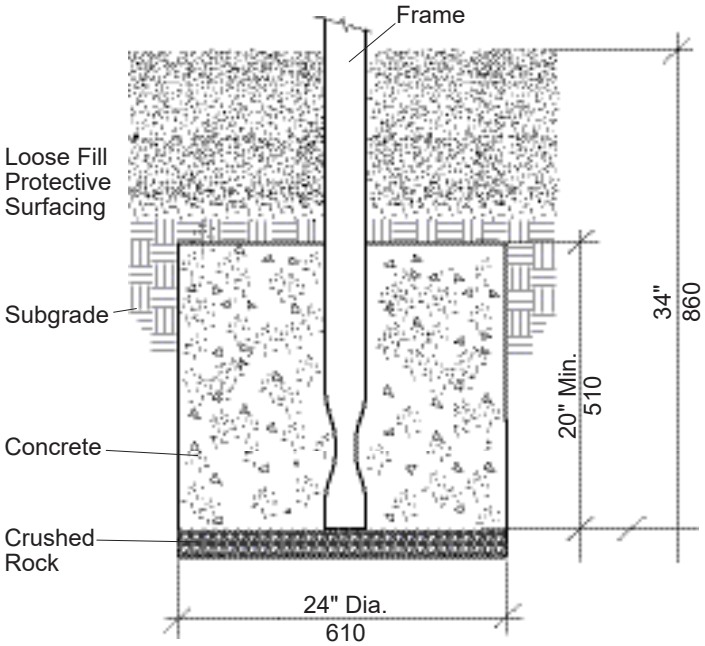

DETAIL
SURFACE MOUNT POST

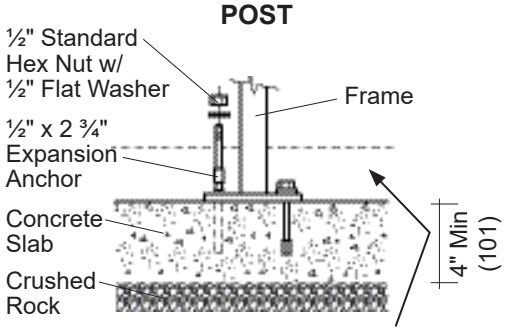

NOTE: Sufficient protective surfacing must cover hardware to satisfy fall height requirements.

601 7th Street South, Delano, Minnesota 55328-8605 888-574-4678 LSI Install Help 888-438-6574 LSI Direct 763-972-5200 Int. FAX (763) 972-3185

© 2020 by Landscape Structures. All rights reserved

DETAIL 1
TONGUE DRUM ASSEMBLY

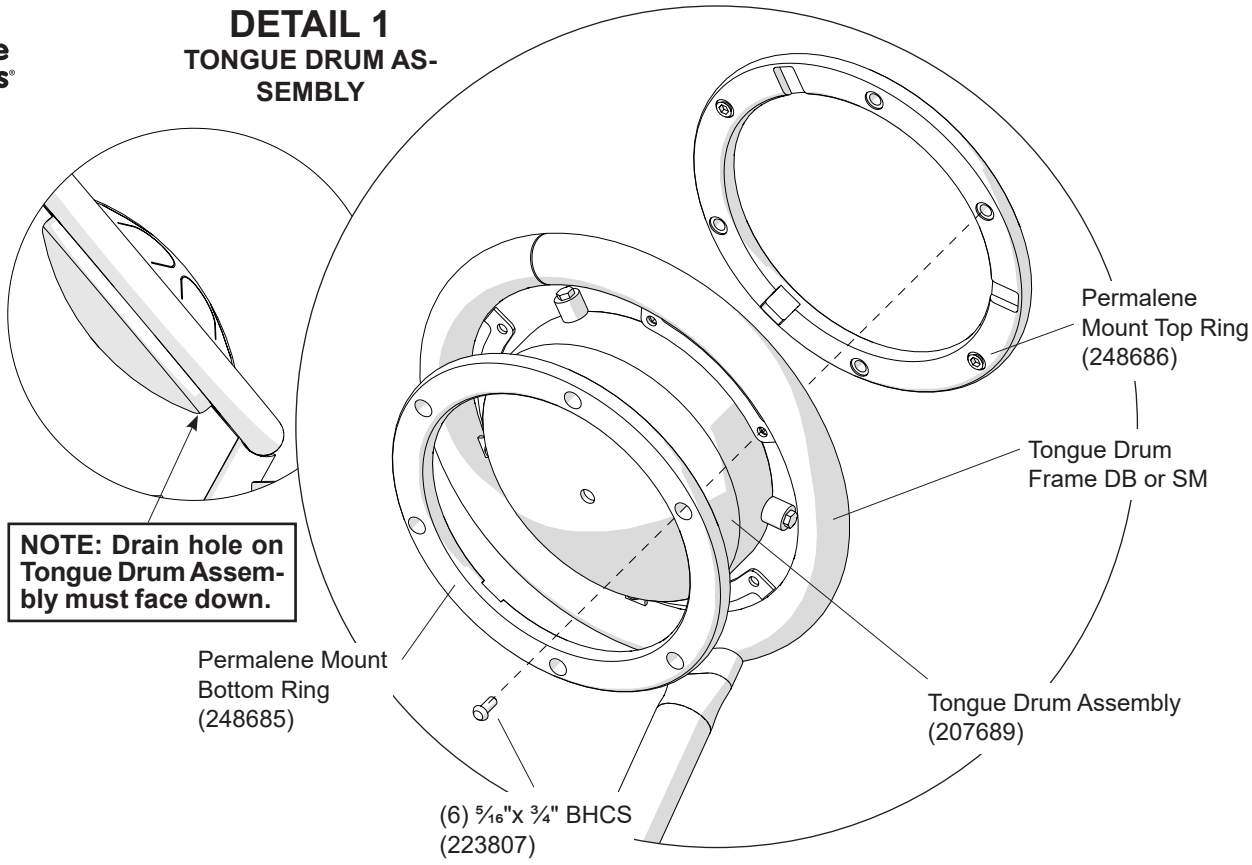

DETAIL 2
MALLET ATTACHMENT

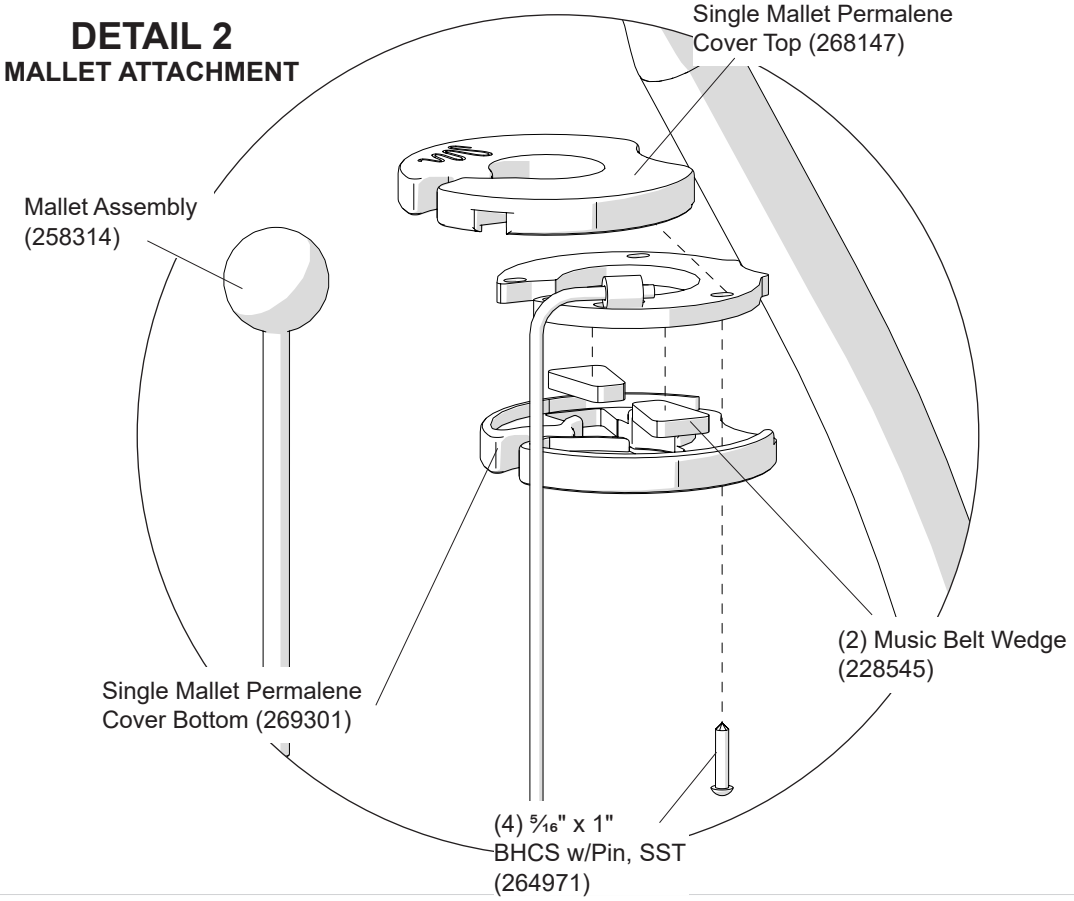

601 7th Street South, Delano, Minnesota 55328-8605 888-574-4678 LSI Install Help 888-438-6574 LSI Direct 763-972-5200 Int. FAX (763) 972-3185
© 2020 by Landscape Structures. All rights reserved
Document #26814300

landscape structures®

Rhapsody® 250341 Tongue Drum Junior w/ Mallet

Parts List

Part#	Description	Qty.
207689	Tongue Drum Asm	1
268147	Single Mallet Perm Cover Top, Specify Color	1
269301	Single Mallet Perm Cover Bottom, Specify Color	1
248604	Tongue Junior Drum Frame DB, Specify Color	1
248685	Perm Mount Ring Bottom, Specify Color	1
248686	Perm Mount Ring Top, Specify Color	1
258314	Mallet ASM 55A Light Gray	1
248603	Tongue Junior Drum Frame SM, Specify Color	1
254686	**Hdw Pkg 2-5 Label**	**1**
156845	2-5 Age Label	1
183064	Warning Label	1
268173	**Hdw Pkg Tongue Drum**	**1**
264971	BHCS w/Pin 5⁄16" x 1", SST	4
223807	BHCS 6LP 5⁄16" -18 x ¾" SST	6
228545	Music Belt Wedge	2
127463	Bit Hex TPP T27 (Torx)	1
148680	Bit 5/16" 6-Lobe T40 Tamp	1
121348	**Hdw Pkg 4-Hole SM 1/2-13**	**1**
100266	Exp Anchor ½" x 2-¾" ZP	4
100322	Nut Hex STD ½-13, SST	4
100363	Washer Flat ½", SST	4

DB= Direct Bury
SM= Surface Mount

Specifications

Tongue Drum: Stainless steel.

Fasteners: Primary fasteners shall be socketed and pinned tamperproof in design, stainless steel (SST) per ASTM F 879 unless otherwise indicated (see specific product installation/specifications).

Mallet: Comprised of 2" (50,8 mm) diameter grey or black polyurethane, 1/2" (12,7 mm) diameter aluminum handle and 3/16" (4,74 mm) stainless steel cable with nylon coating.

Permalene: Recycled permalene, specify color.

Frame: Weldment comprised of 1.900" (48,26 mm) O.D. RS40 (.120"-.130")(3,00 mm-3,30 mm) wall galvanized steel tubing, 1.660 OD RS40 (.111 - .121) wall galvanized steel tubing and 3/8" (9,52 mm) thick HRPO steel sheet. Finish: ProShield®, color specified.

Installation Time: Approx. 1 person hours
Weight: DB 36 lbs.
SM 46 lbs.
Concrete: 5.24 Cubic Feet DB

Installation Instructions

1) **(Direct Bury)** Dig footing holes. Refer to the PlanView & Direct Bury Details.
2) Assemble Tongue Drum. Refer to Detail 1 and 2.

1) **(Surface Mount)** With sign in proper position, using ½" masonry bit and hammer drill, drill 3" deep holes into concrete slab through holes in post slate. Tap ½" x 2 ¾" expansion anchors into holes and secure using ½" standard hex nuts with ½" flat washers.
2) Assemble Tongue Drum. Refer to Detail 1 and 2.

ECO# 0101835 Document 26814300 replaces 26191700. Updated Rhapsody mallet holder.

landscape structures®

ISO 14001 CERTIFIED

ISO 9001 Certified

SAFETY NOTE

Choose a protective surfacing material that has a Critical Height Value of at least the height of the Highest Accessible Part/Fall Height of the adjacent equipment. (Ref. ASTM F1487.)

15062400

DETAIL
PANEL ATTACHMENT

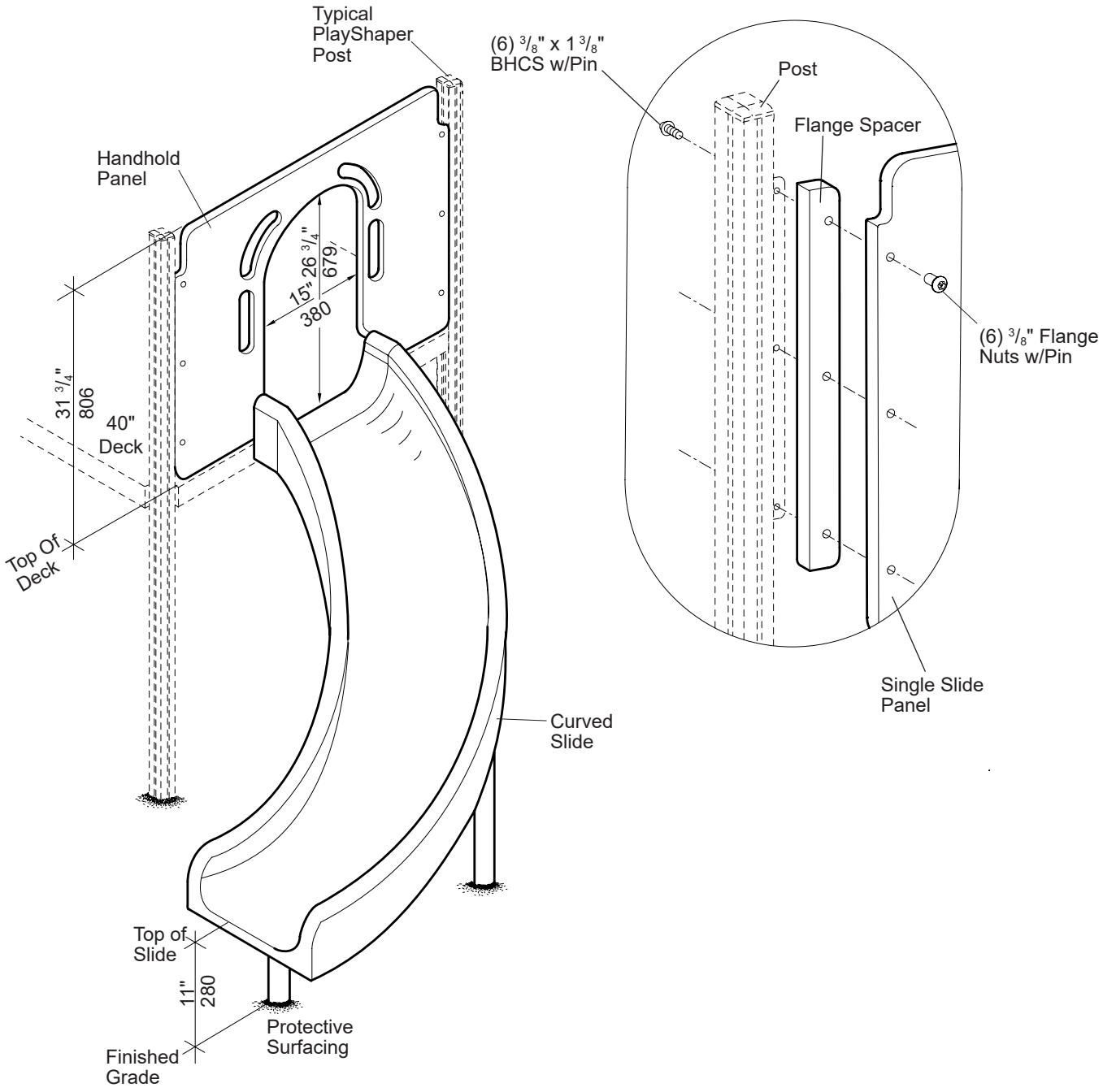

PlayShaper®

123339 Curved Slide, 40"

601 7TH STREET SOUTH, DELANO, MINNESOTA 55328-8605 888-574-4678 LSI Install Help 888-438-6574 LSI Direct 763-972-5200 Int. FAX (763) 972-3185

© 2020 by Landscape Structures. All rights reserved.

PlayShaper® 123339 Curved Slide, 40"

Parts List

Part#	Description	Qty.
275936	Curved Slide, Specify Color	1
127001	Exit Support, (DB), Specify Color	1
127002	Mid-Support, (DB), Specify Color	1
127008	Exit Support, (SM), Specify Color	1
127011	Mid-Support, (SM), Specify Color	1
145467	Handhold Panel, Specify Color	1
150436	Flange Spacer, Specify Color	2
111507	**Slide Hardware Package**	1
100196	3/8" x 7/8" BHCS w/Pin, SST	2
100362	3/8" Flat Washer, SST	6
100292	3/8" x 1 1/4" BHCS w/Pin Ltd. Thread Bolt, SST	4
100365	3/8" SAE Flat Washer, SST	4
111442	Rubber Bushing	4
150558	**6-Hole Panel Attach. Hardware Package**	1
113027	3/8" x 1 3/8" BHCS w/Pin, SST	6
100353	3/8" Flange Nut w/Pin, SST	6
111394	**4-Hole (SM) Hardware Package**	1
100263	3/8" x 2 3/4" Expansion Anchor	4
100327	3/8" Standard Hex Nut, SST	4
100362	3/8" Flat Washer, SST	4

DB = Direct Bury
SM = Surface Mount

Specifications

Slide: Rotationally molded from U.V. stabilized linear low density polyethylene, color specified.

Mid-Support: Weldment comprised of 1.315" O.D. RS-20 (.080" - .090") galvanized steel tubing and 1/4" x 1 1/2" x 6" mounting plate. Finish: ProShield®, color specified.

Exit Footer: Weldment comprised of 2.375" O.D. RS-20 (.095" - .105") galvanized steel tubing and 1/4" x 3" mounting plate. Finish: ProShield, color specified.

Flange Spacer & Handhold Panel: Solid color Permalene®, color specified.

Fasteners: Primary fasteners shall be socketed and pinned tamperproof in design, stainless steel (SST) per ASTM F 879 unless otherwise indicated (see specific product installation/specifications).

Installation Time: Approx. 1 man hour
Concrete Req.: Approx. 2.4 cu. ft.
Area Req.: Refer To Site Plan
Weight: 90 lbs.
Fall Height: 40" (1,02 m)

Specifications are subject to change without notice.

Installation Instructions

1) **(Direct Bury)** Dig footings spaced as shown.

2) Attach panel and flange spacers to post flanges using 3/8" x 1 3/8" BHCS w/pin with 3/8" flange nuts w/pin. Refer to the Panel Attachment Detail.

3) Attach exit and mid-supports to slide using 3/8" x 1 1/4" BHCS w/pin limited thread bolts, 3/8" SAE flat washers, rubber bushings and 3/8" flat washers. **NOTE:** *Attach bolts in center of the slots to allow for expansion and contraction. Snug bolts down only, do not over-tighten!* See Support Attachment Detail.

4) Attach slide to the face of the deck using 3/8" x 7/8" BHCS w/pin with 3/8" flat washers. Refer to Deck Connection Detail.

5) **(Direct Bury)** With supports plumb pour concrete footings. Allow concrete footings to cure for a minimum of 72 hours before users are allowed to play on the structure.

   (Surface Mount) Mark anchor bolt locations on concrete slab through holes in anchor plate and remove slide. Drill 3/8" x 3" deep holes on marks into concrete using a hammer drill and 3/8" masonry bit. Tap expansion anchors into drilled holes. Reposition slide and reattach to the face of the deck following step 4. Fasten support to expansion anchors using 3/8" standard hex nuts with 3/8" flat washers.

6) Install protective surfacing before users are allowed to play on the structure.

Eco #0102030 Document #28203100 replaces #15062400. New curved slide number due to new mold.

landscape structures®

SAFETY NOTE
Choose a protective surfacing material that has a Critical Height Value of at least the height of the Highest Accessible Part/Fall Height of the adjacent equipment. (Ref. ASTM F1487.)

150624a

PLAN VIEW/ FOOTING LAYOUT

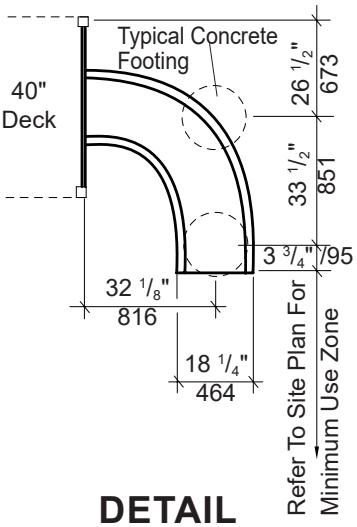

DETAIL DECK CONNECTION

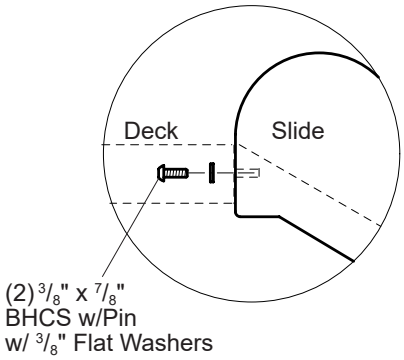

DETAIL SURFACE MOUNT

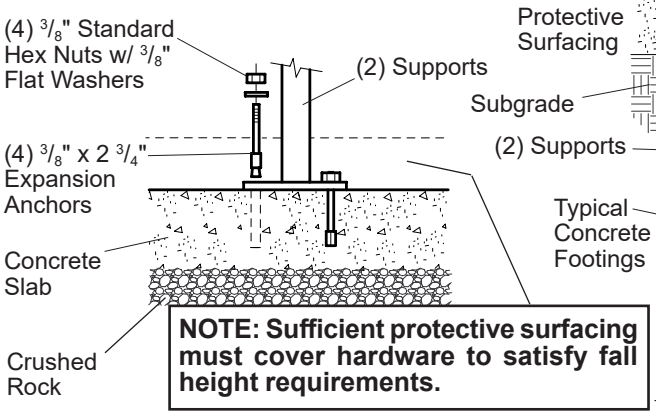

NOTE: Sufficient protective surfacing must cover hardware to satisfy fall height requirements.

DETAIL DIRECT BURY

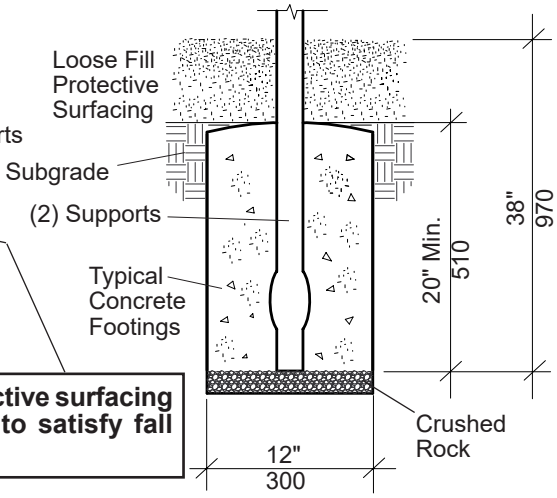

DETAIL SUPPORT ATTACHMENT

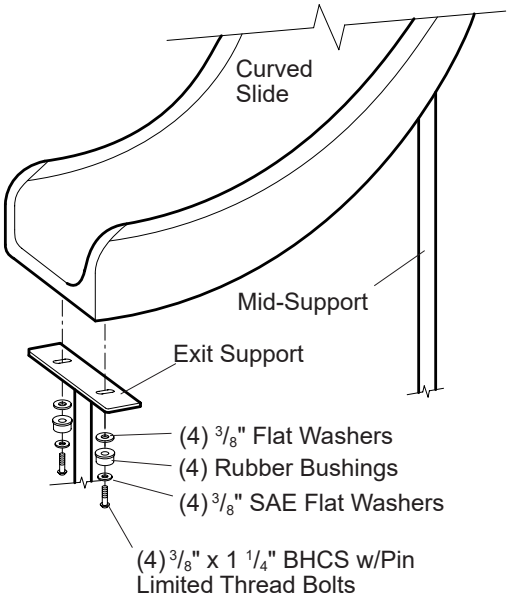

NOTE: Attach limited thread bolts in the center of the slots to allow for expansion and contraction. Snug bolts down only, do not overtighten.

PlayShaper®

123339 Curved Slide, 40"

601 7TH STREET SOUTH, DELANO, MINNESOTA 55328-8605 888-574-4678 LSI Install Help 888-438-6574 LSI Direct 763-972-5200 Int. FAX (763) 972-3185

© 2020 by Landscape Structures. All rights reserved.

Document #28203100

landscape structures®

ISO 14001 CERTIFIED

ISO 9001 Certified

SAFETY NOTE

Choose a protective surfacing material that has a Critical Height Value of at least the height of the Highest Accessible Part/Fall Height of the adjacent equipment. (Ref. ASTM F1487.)

17872700

PLAN VIEW/ FOOTING LAYOUT

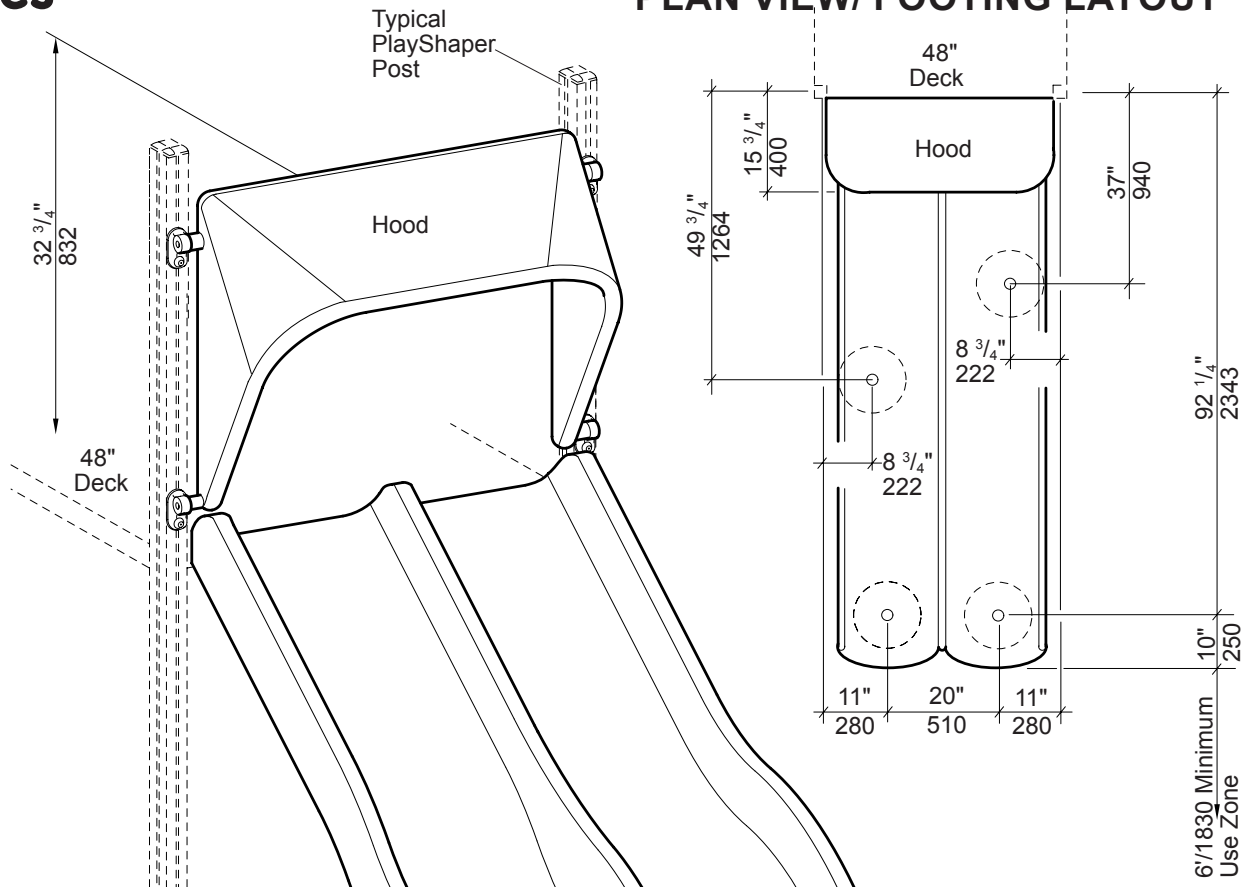

DETAIL
MID-SUPPORT

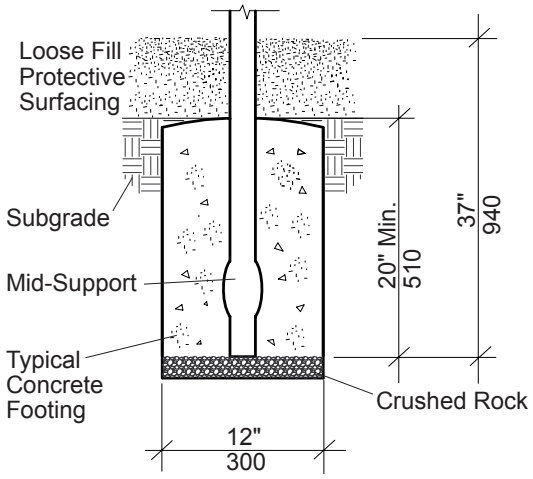

PlayShaper® 178720 Double Wave Slide, 48"

601 7TH STREET SOUTH, DELANO, MINNESOTA 55328-8605 888-574-4678 LSI Install Help 888-438-6574 LSI Direct 763-972-5200 Int. FAX (763) 972-3185

© 2011 by Landscape Structures. All rights reserved.

PlayShaper® 178720 Double Wave Slide, 48"

landscape structures®

Parts List

Part#	Description	Qty.
130716	Double Wave Slide, Specify Color	1
126957	Hood, Specify Color	1
100583	40 7/16" Rail, Aluminum, Specify Color	1
132443	Rail Spacer, Specify Color	2
113895	Offset Bolt Bracket, Specify Color	4
150941	Support (DB), Specify Color	2
151013	Support (SM), Specify Color	2
116908	64" Mid-Support (DB), Specify Color	1
116917	54" Mid-Support (DB), Specify Color	1
134565	28 1/2" Mid-Support (SM), Specify Color	1
134567	18 1/2" Mid-Support (SM), Specify Color	1
105288	1 1/8" O.D. x 1 5/8" Tube, Specify Color	2
132154	**Slide Hood Hardware Package**	1
100198	3/8" x 1 1/8" BHCS w/Pin, SST	4
100200	3/8" x 3 1/2" BHCS w/Pin, SST	2
100203	5/8" x 2 1/4" BHCS w/Pin, SST	2
100365	3/8" SAE Flat Washer, SST	6
166868	3/4" O.D. x .390" Spacer, Aluminum	4
116943	**Slide Hardware Package**	1
100196	3/8" x 7/8" BHCS w/Pin, SST	4
100292	3/8" x 1 1/4" BHCS w/Pin Ltd. Thread Bolt, SST	8
100362	3/8" Flat Washer, SST	12
100365	3/8" SAE Flat Washer, SST	8
111442	Rubber Bushing	8
121348	**4-Hole SM Hardware Package**	2
100266	1/2" x 2 3/4" Expansion Anchor	8
100322	1/2" Standard Hex Nut, SST	8
100363	1/2" Flat Washer, SST	8

DB=Direct Bury
SM=Surface Mount

Specifications

Slide: Rotationally molded from U.V. stabilized linear low density polyethylene, color specified.

Hood: Rotationally molded from U.V. stabilized linear low density polyethylene, color specified.

Rail: Extruded from 1.125" O.D. x .312" W. 6061-T6 aluminum. Finish: ProShield®, color specified.

Rail Spacer: Fabricated from 1.3125 O.D. x 16 Ga. (.065) steel tubing. Finish: ProShield, color specified.

Tube: 1 1/8" O.D x 1 5/8" long aluminum tube. Finish: ProShield, color specified.

Mid-Support: Weldment comprised of 1.660" O.D. RS-20 (.085" - .095") galvanized steel tubing and 1/4" x 3" flat steel. Finish: ProShield, color specified.

Exit Support: Weldment comprised of 2.375" O.D. RS-20 (.095" - .105") galvanized steel tubing and 1/4" x 3" mounting plate. Finish: ProShield, color specified.

Offset Bolt Bracket: Cast from 356-T6 aluminum alloy. Finish: ProShield, color specified.

Fasteners: Primary fasteners shall be socketed and pinned tamperproof in design, stainless steel (SST) per ASTM F 879 unless otherwise indicated (see specific product installation/specifications).

Installation Time: **SM** - Approx. 2 man hours
DB - Approx. 3 man hours

Concrete Req.: Approx. 6.6 cu. ft.

Area Req.: 6' (1830 mm) minimum use zone at exit

Weight: **SM -** 159 lbs.
DB - 175 lbs.

Fall Height: 48" Deck (1,22 m)

Installation Instructions

1) **(Direct Bury)** Dig footings spaced as shown.

2) Attach offset bolt brackets to posts using 3/4" O.D. x .390" spacers and 3/8" x 1 1/8" BHCS w/pin with 3/8" SAE flat washers. Refer to Detail.

3) Place 40 7/16" rail in hood and attach rail and rail spacers to offset bolt brackets using 5/8" x 2 1/4" BHCS w/pin.

4) Attach bottom of hood to offset bolt brackets using space tubes and 3/8" x 3 1/2" BHCS w/pin with 3/8" SAE flat washers.

5) Attach supports to slide using 3/8" x 1 1/4" BHCS w/pin limited thread bolts, 3/8" SAE flat washers, rubber bushings and 3/8" flat washers. Refer to the Support Attachment Detail. **NOTE:** *Attach bolts in the center of the slots to allow for expansion and contraction. Snug bolts down only, do not overtighten.*

6) Attach slide to the face of the deck using 3/8" x 7/8" BHCS w/pin with 3/8" flat washers. Refer to the Deck Connection Detail.

7) **(Direct Bury)** With supports plumb pour concrete footings.

   (Surface Mount) Mark anchor bolt locations on concrete slab through holes in the support plate and remove the slide. Drill 1/2" x 3" deep holes on marks into concrete using a hammer drill and 1/2" masonry bit. Tap expansion anchors into drilled holes. Reposition slide and reattach to the face of the deck following step 6. Fasten support to expansion anchors using 1/2" standard hex nuts with 1/2" flat washers.

8) Install protective surfacing before users are allowed to play on the structure.

Specifications are subject to change without notice.

Eco# 0101203 Document 23750200 replaces 17872700. Replace 113468 spacer with 105288.

landscape structures®

SAFETY NOTE

Choose a protective surfacing material that has a Critical Height Value of at least the height of the Highest Accessible Part/Fall Height of the adjacent equipment. (Ref. ASTM F1487.)

178727a

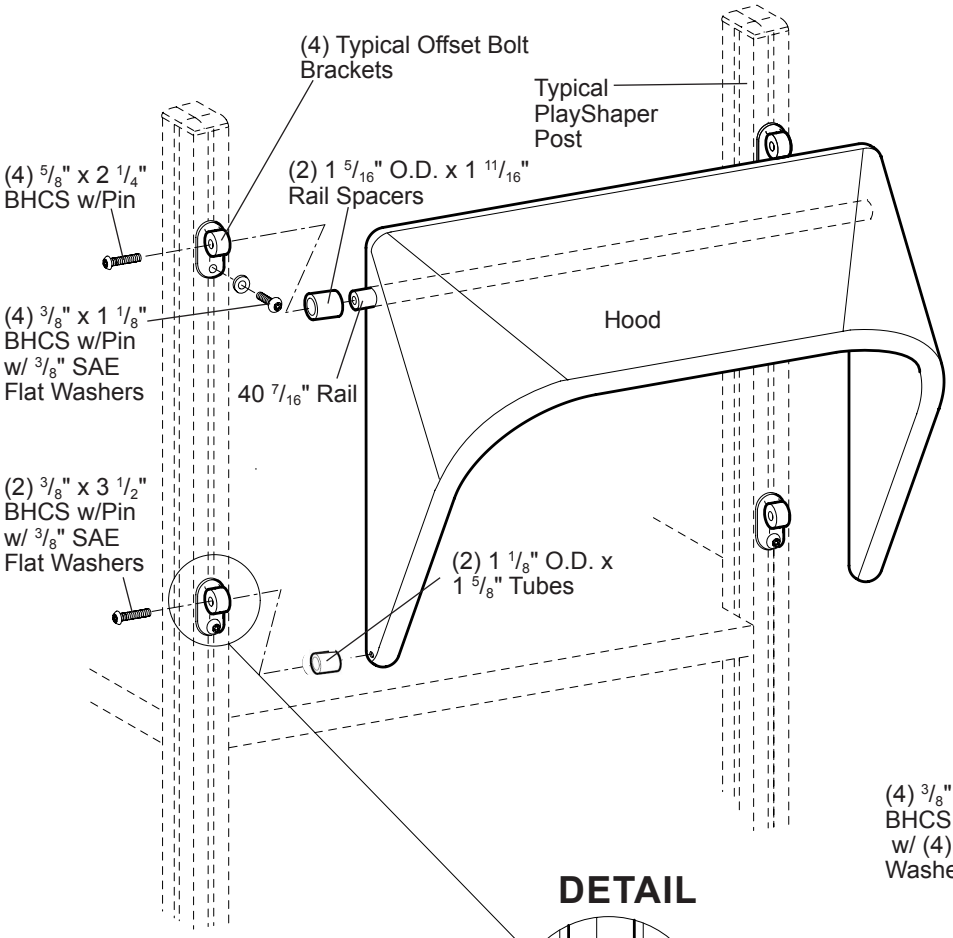

HOOD - HANDLE DETAIL

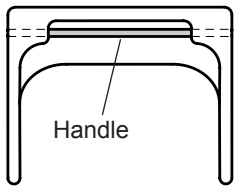

DETAIL
SLIDE/DECK CONNECTION

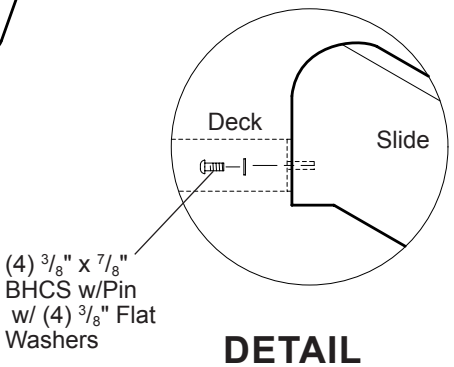

DETAIL

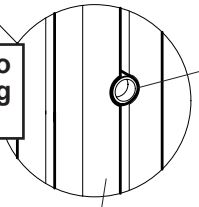

NOTE: Insert spacers into posts before attaching offset bolt brackets.

DETAIL
DIRECT BURY

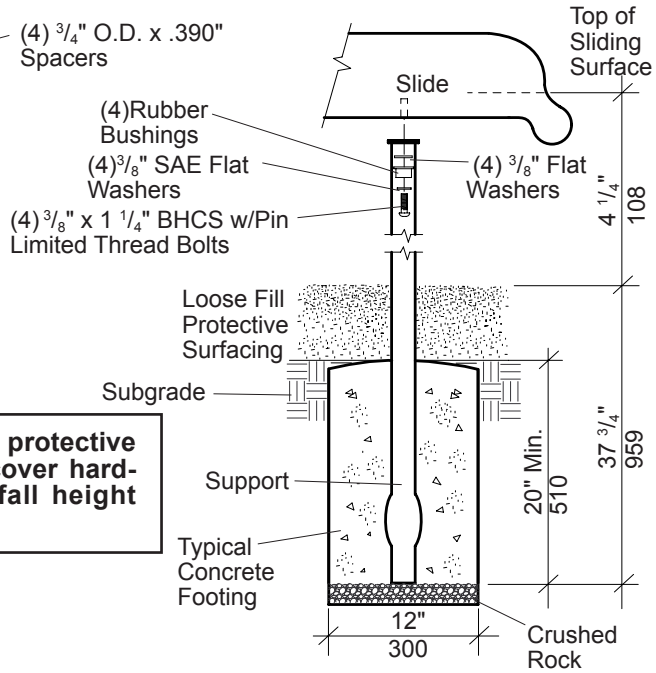

DETAIL
SURFACE MOUNT

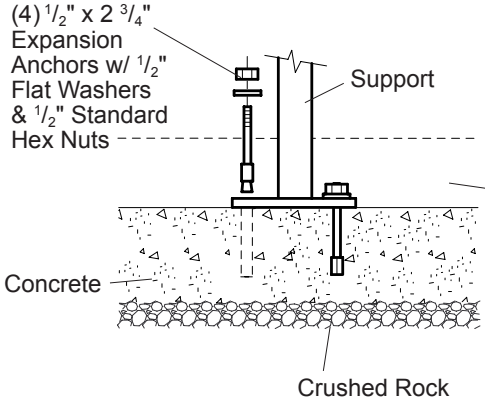

NOTE: Sufficient protective surfacing must cover hardware to satisfy fall height requirements.

PlayShaper® 178720 Double Wave Slide, 48"

601 7TH STREET SOUTH, DELANO, MINNESOTA 55328-8605 888-574-4678 LSI Install Help 888-438-6574 LSI Direct 763-972-5200 Int. FAX (763) 972-3185

© 2011 by Landscape Structures. All rights reserved.

Document #23750200

landscape structures®

ISO 14001 CERTIFIED

ISO 9001 Certified

SAFETY NOTE

Choose a protective surfacing material that has a Critical Height Value of at least the height of the Highest Accessible Part/Fall Height of the adjacent equipment. (Ref. *ASTM F1487*.)

17745700

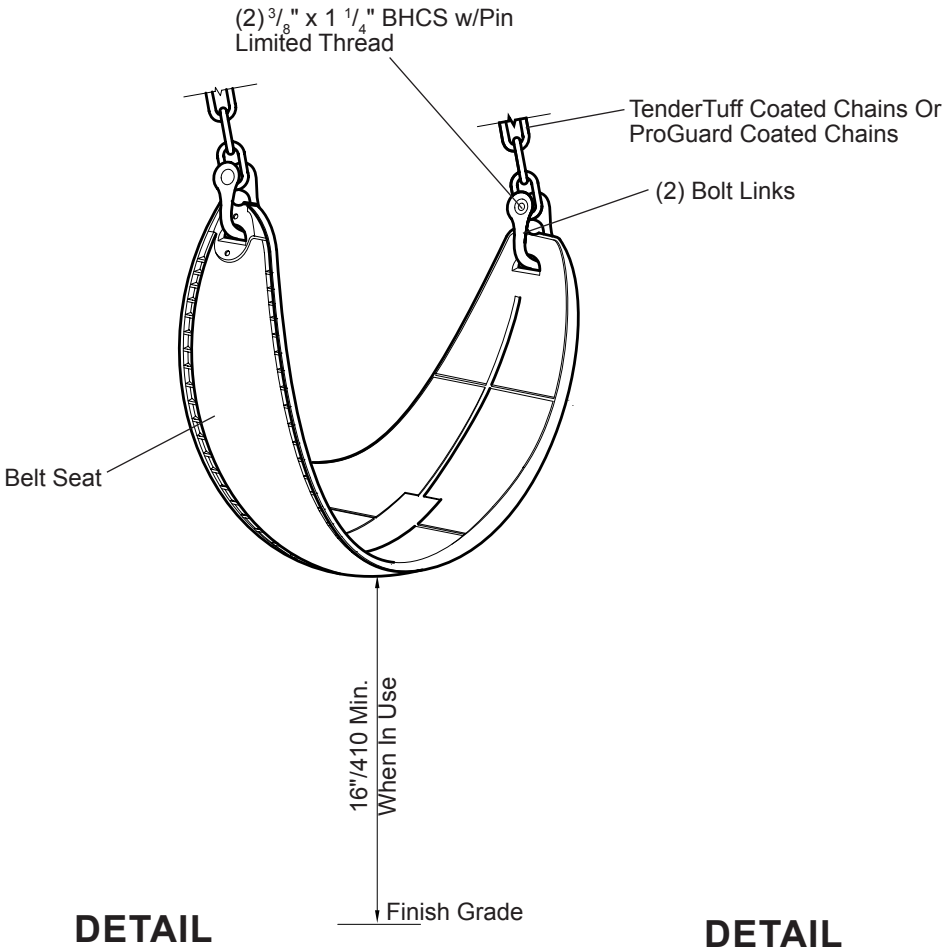

DETAIL
BOLT LINK

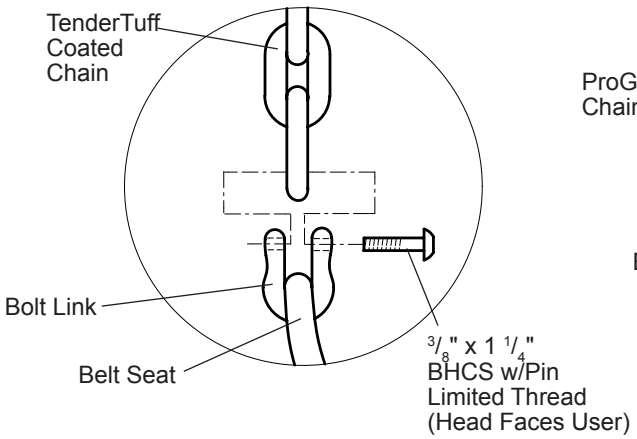

DETAIL
BOLT LINK

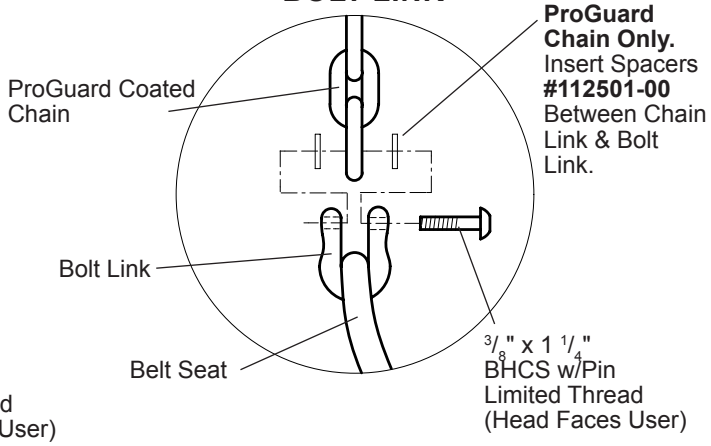

Swings

174018 Belt Seat

601 7TH STREET SOUTH, DELANO, MINNESOTA 55328-8605 888-574-4678 LSI Install Help 888-438-6574 LSI Direct 763-972-5200 Int. FAX (763) 972-3185

© 2015 by Landscape Structures. All rights reserved.

Document #21059100

landscape structures®

Swings 174018 Belt Seat

Parts List

Part #	Description	Qty.
	7 Ft. High Beam	
128842	Belt Swing Seat, Black	1
178679	57 7/16" Chain, TenderTuff, Specify Color	2
175251	57 7/16" Chain, ProGuard	2
132672	**Bolt Link w/Bolt & Spacers**	1
100292	3/8" x 1 1/4" BHCS w/Pin Ltd. Thread, SST	2
138915	Bolt Link, SST	2
112501	Chain Spacer	4
132635	**Bolt Link w/Bolt Hardware Package**	1
100292-00	3/8" x 1 1/4" BHCS w/Pin Ltd. Thread, SST	2
138915	Bolt Link, SST	2
	8 Ft. High Beam	
128842	Belt Swing Seat, Black	1
152050	67 7/8" Chain, TenderTuff, Specify Color	2
174404	67 7/8" Chain, ProGuard	2
132672	**Bolt Link w/Bolt & Spacers**	1
100292	3/8" x 1 1/4" BHCS w/Pin Ltd. Thread, SST	2
138915	Bolt Link, SST	2
112501	Chain Spacer	4
132635	**Bolt Link w/Bolt Hardware Package**	1
100292	3/8" x 1 1/4" BHCS w/Pin Ltd. Thread, SST	2
138915	Bolt Link, SST	2
	10 Ft. High Beam	
128842	Belt Swing Seat, Black	1
152052	90 11/16" Chain, TenderTuff, Specify Color	2
174884	90 11/16" Chain, ProGuard	2
132672	**Bolt Link w/Bolt & Spacers**	1
100292	3/8" x 1 1/4" BHCS w/Pin Ltd. Thread, SST	2
138915	Bolt Link, SST	2
112501	Chain Spacer	4
132635	**Bolt Link w/Bolt Hardware Package**	1
100292	3/8" x 1 1/4" BHCS w/Pin Ltd. Thread, SST	2
138915	Bolt Link, SST	2

Specifications

Chain Spacer: Made from white nylon measuring .080" x .785" O.D.

Chain/ProGuard: Steel 3/16" straight link chain, 800 lb. working load limit. Finish: ProGuard.

Chain/Coated: Steel 3/16" straight link chain, 800 lb. working load limit. Finish: TenderTuff®, color specified.

Belt Seats: Molded from U.V. stabilized black EPDM rubber encapsulating a weldment comprised of a 22 GA (.029") spring stainless steel sheet, and (4) .105" thick stainless steel washers. The belt seat elliptical shape measures 7" wide x 26" long x .700" thick.

Bolt Link: Stainless Steel.

Fasteners: Primary fasteners shall be socketed and pinned tamperproof in design, stainless steel (SST) per ASTM F 879 unless otherwise indicated (see specific product installation/specifications).

Installation Time: 1/4 man hour per seat

Weight: 8 lbs. (7 Ft. Beam w/ProGuard Chains)
9 lbs. (7 Ft. Beam w/TenderTuff Chains
8 lbs. (8 Ft. Beam w/ProGuard Chains)
9 lbs. (8 Ft. Beam w/TenderTuff Chains)
10 lbs. (10 Ft. Beam w/ProGuard Chains)
11 lbs. (10 Ft. Beam w/TenderTuff Chains)

Installation

Swing Hangers With Double Clevis

1) Attach chains to double clevis using 3/8" x 1 1/4" BHCS w/pin limited thread, as shown.
2) Attach chains to belt seat using bolt links with 3/8" x 1 1/4" BHCS w/pin limited thread. Be sure bolt heads face user. **NOTE:** *Use chain spacers as shown when installing ProGuard chains.*
3) Install protective surfacing before users are allowed to play on the structure.

Anti-wrap Swing Hangers

1) Attach chains to aluminum clevis using 3/8" x 7/8" BHCS w/pin limited thread, as shown.
2) Attach chains to belt seat using bolt links with 3/8" x 1 1/4" BHCS w/pin limited thread. Be sure bolt heads face user. **NOTE:** *Use chain spacers as shown when installing ProGuard chains.*
3) Install protective surfacing before users are allowed to play on the structure.

Specifications are subject to change without notice.

landscape structures®

ISO 14001 CERTIFIED

ISO 9001 Certified

SAFETY NOTE

Choose a protective surfacing material that has a Critical Height Value of at least the height of the Highest Accessible Part/Fall Height of the adjacent equipment. (Ref. *ASTM F1487*.)

177460b

SWING HANGER OPTIONS

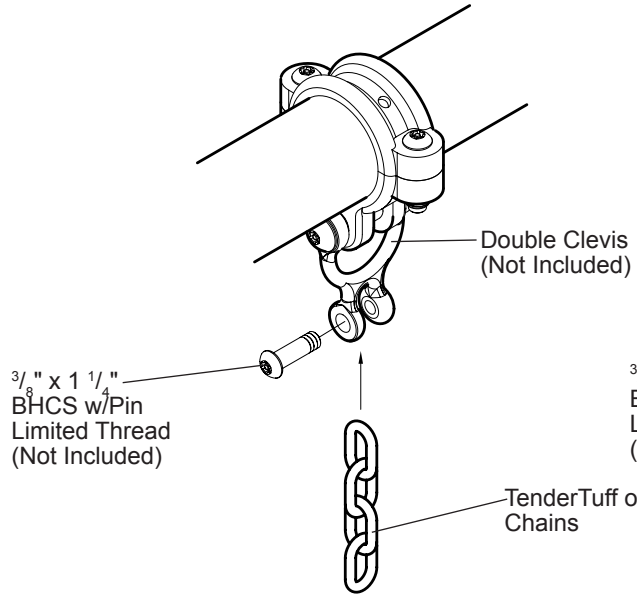

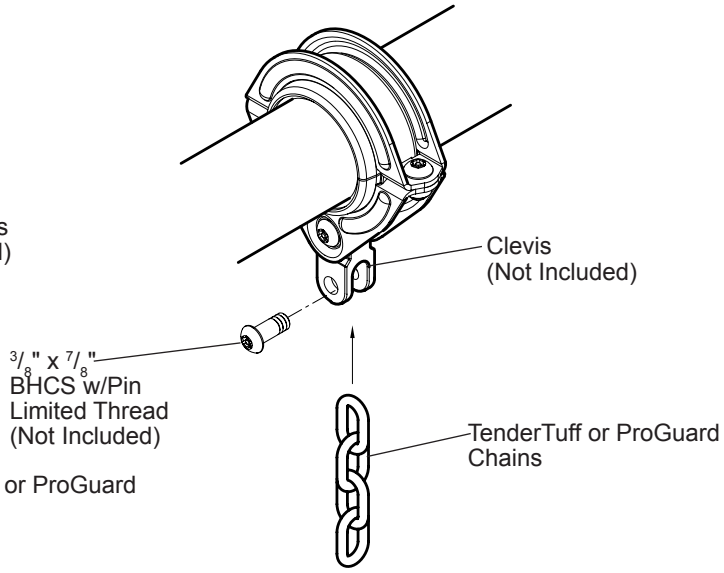

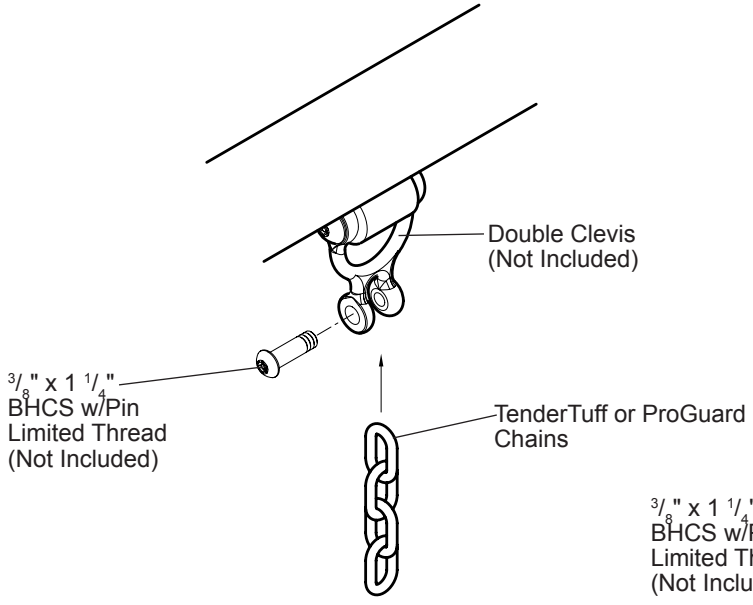

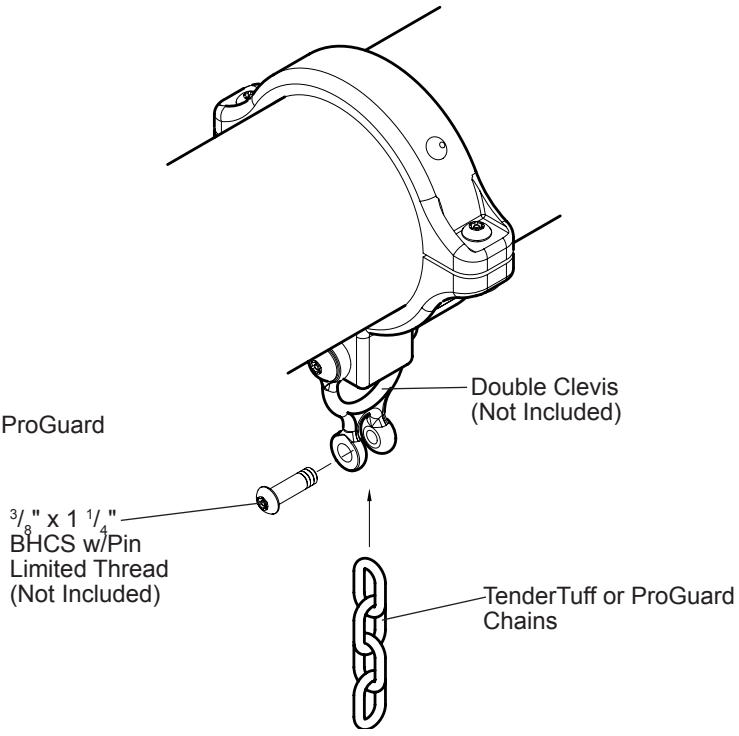

601 7TH STREET SOUTH, DELANO, MINNESOTA 55328-8605 888-574-4678 LSI Install Help 888-438-6574 LSI Direct 763-972-5200 Int. FAX (763) 972-3185

© 2015 by Landscape Structures. All rights reserved.

landscape structures®

ISO 14001 CERTIFIED

ISO 9001 Certified

SAFETY NOTE

Choose a protective surfacing material that has a Critical Height Value of at least the height of the Highest Accessible Part/Fall Height of the adjacent equipment. (Ref. ASTM F1487.)

13616300

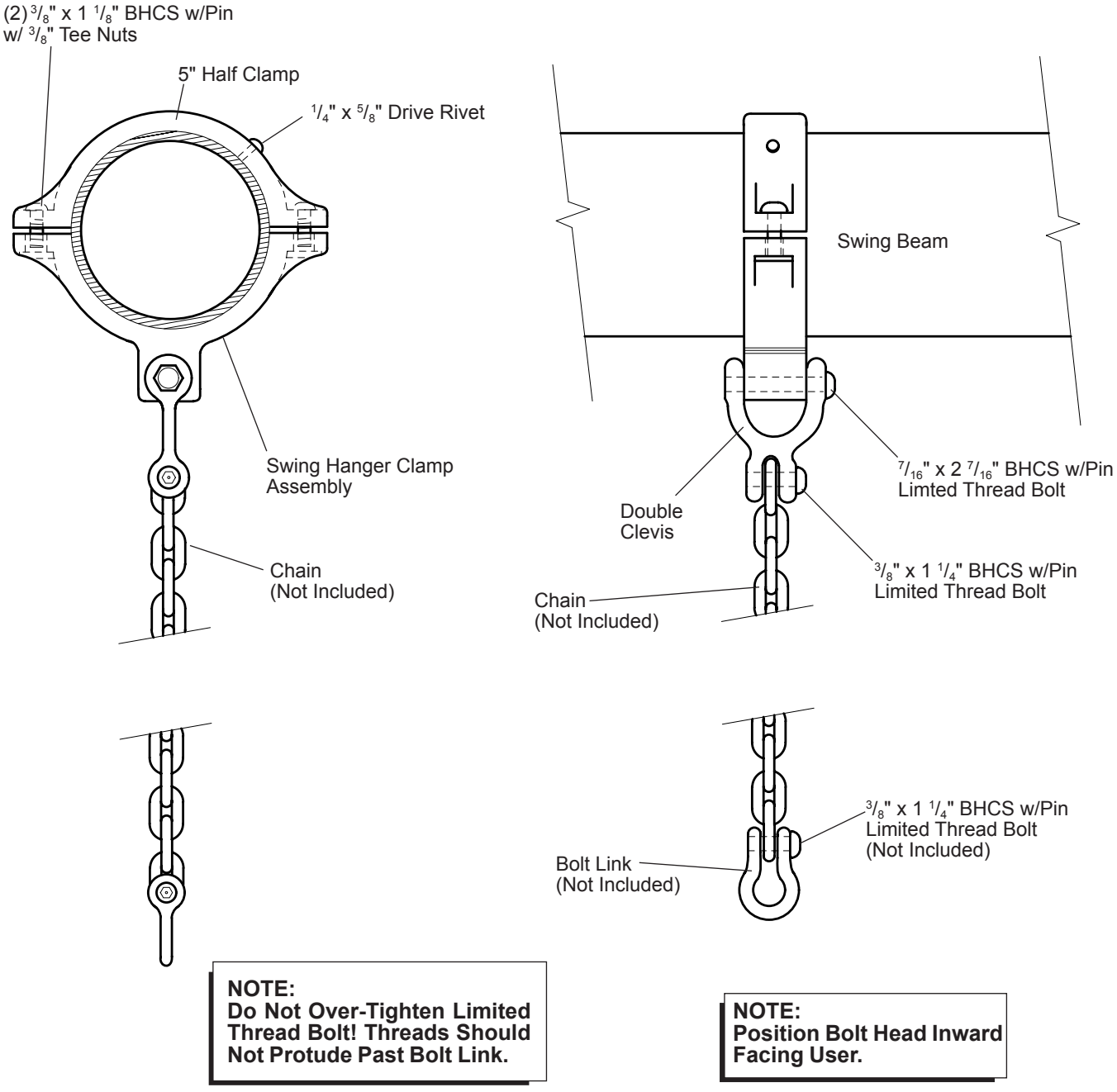

NOTE:
Do Not Over-Tighten Limited Thread Bolt! Threads Should Not Protude Past Bolt Link.

NOTE:
Position Bolt Head Inward Facing User.

Swings

111418 Swing Hanger, Belt Swing

601 7TH STREET SOUTH, DELANO, MINNESOTA 55328-8605 888-574-4678 LSI Install Help 888-438-6574 LSI Direct 763-972-5200 Int. FAX (763) 972-3185

© 2012 by Landscape Structures. All rights reserved.

Swings 111418 Swing Hanger, Belt Swing

Parts List

Part#	Description	Qty.
105327-01	5" Half Clamp, Specify Color	1
100198-00	3/8" x 1 1/8" BHCS w/Pin, SST	2
100351-00	3/8" Tee Nut, SST	2
100610-00	1/4" x 5/8" Drive Rivet, AL/SST	1
100292-00	3/8" x 1 1/4" BHCS w/Pin Ltd. Thread Bolt, SST	1
121291-00	**Swing Hanger Clamp Assy. Specify Color**	1
121289-00	Swing Hanger Clamp, Specify Color	1
127068-00	7/16" x 2 7/16" BHCS w/Pin Ltd. Thread Bolt, SST	1
138917-00	Swing Hanger Double Clevis SST	1
100667-00	Oilite Bushing	1

Specifications

Hanger Clamp Assembly: Cast aluminum. Finish: ProShield®, color specified.

Double Clevis: Stainless Steel.

Fasteners: Primary fasteners shall be socketed and pinned tamperproof in design, stainless steel (SST) per ASTM F 879 unless otherwise indicated (see specific product installation/specifications).

Installation Time: Approx. 1/2 man hour

Weight: 6 lbs.

Installation Instructions

1) Locate and mark location of clamp on beam.

2) Attach 5" half clamp and swing hanger clamp to beam using 3/8" x 1 1/8" BHCS w/pin and 3/8" tee nuts. *Tighten evenly.*

3) ***IMPORTANT:*** *Drill through holes in 5" half clamps and into 5" pipe with a 1/4" or "F" (only) drill bit, tap 1/4" x 5/8" drive rivets through 5" half clamps and into pipe, to ensure that clamps remain secure.*

4) Attach swing chain to double clevis using 3/8" x 1 1/4" BHCS w/pin limited thread bolts.

5) Attach swing seat to chains using bolt links with 3/8" x 1 1/4" BHCS w/pin limited thread bolts. **NOTE:** *Do not over-tighten limited thread bolt. Threads should not protrude past bolt link. Position bolt head inward facing user.*

Specifications are subject to change without notice.

ECO #54506 Document #18379700 replaces #13616300. Changed Double Clevis material to Stainless Steel.

landscape structures®

ISO 14001 CERTIFIED

ISO 9001 Certified

SAFETY NOTE

Choose a protective surfacing material that has a Critical Height Value of at least the height of the Highest Accessible Part/Fall Height of the adjacent equipment. (Ref. ASTM F1487.)

220985

NOTE: Model numbers are for swing frames only, order swing seats with chains separately.

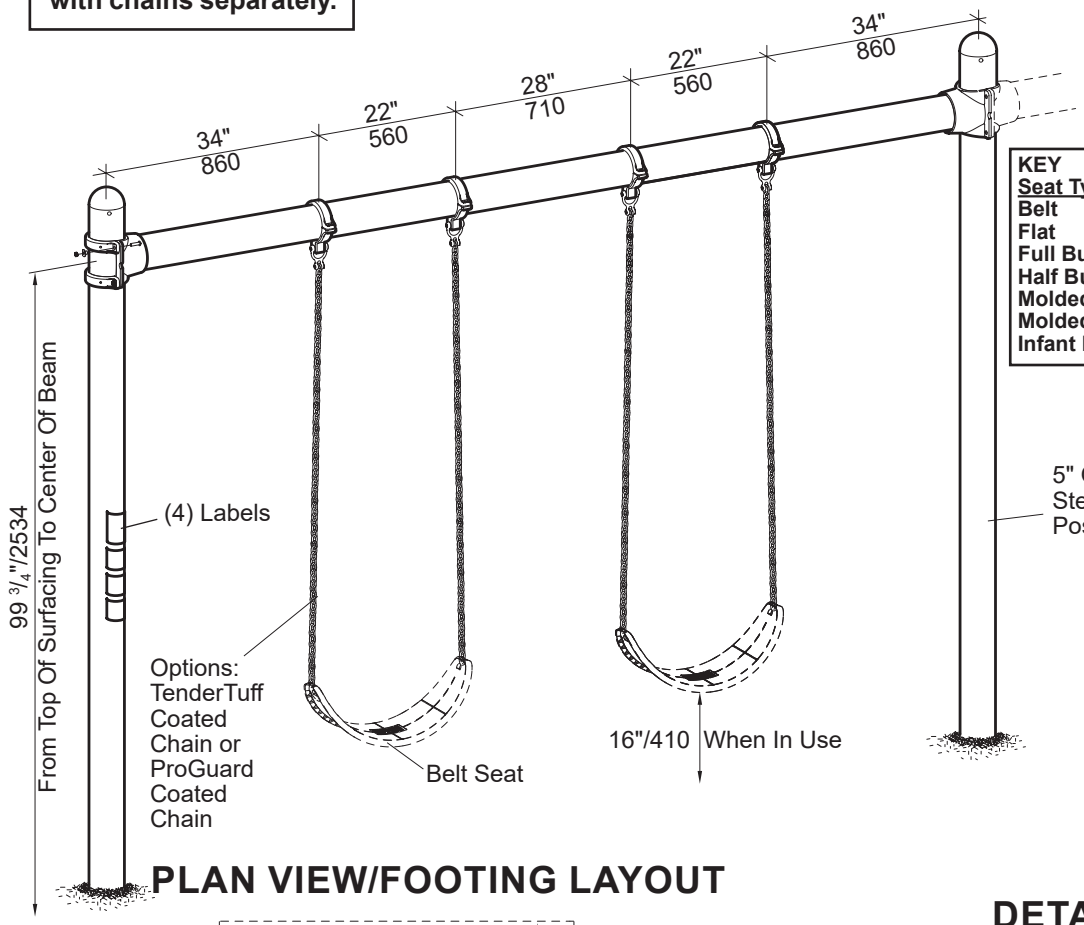

KEY	
Seat Type	**Dimension "A"**
Belt	16'-0" (4,88 m)
Flat	16'-0" (4,88 m)
Full Bucket	12'-0" (3,66 m)
Half Bucket	16'-0" (4,88 m)
Molded Bucket	16'-0" (4,88 m)
Molded Bucket/Harness	13'-0" (3,96 m)
Infant Full Bucket	N/A

PLAN VIEW/FOOTING LAYOUT

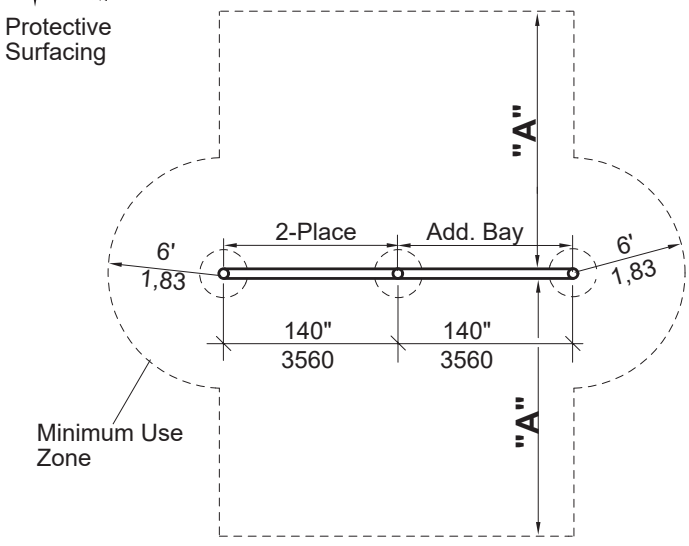

DETAIL
CONCRETE FOOTING

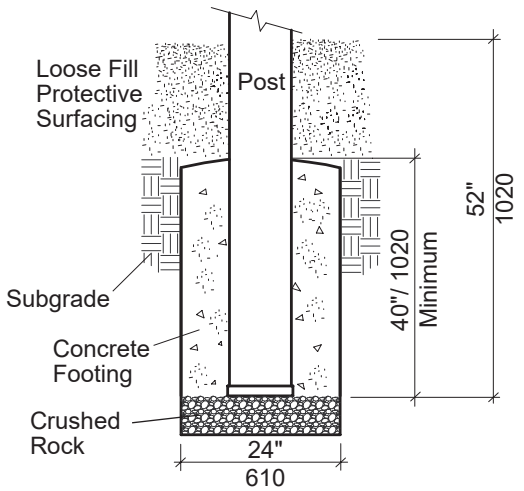

Model #177345 Additional Bay

Swings 177344/177345 Single Post Swing Frame, 52" Bury

601 7TH STREET SOUTH, DELANO, MINNESOTA 55328-8605 888-574-4678 LSI Install Help 888-438-6574 LSI Direct 763-972-5200 Int. FAX (763) 972-3185

© 2016 by Landscape Structures. All rights reserved.

Document #24382200

Swings 177344/177345 Single Post Swing Frame, 52" Bury

landscape structures®

Parts List

Part#	Description	Qty.	
216492	Swing Beam, Specify Color	1	1
220684	160" Steel Post Assy., Specify Color	2	1
105327	5" Half Clamp, Specify Color	8	4*
100610	1/4X5/8i DRV, Rivet, AS	8	8
121291	**Swing Hanger Clamp Assy. Specify Color**	4	4
121289	Swing Hanger Clamp, Specify Color	4	4
127068	$^{7}/_{16}$" x 2 $^{7}/_{16}$" BHCS w/Pin Ltd. Thread, SST	4	4
138917	Swing Hanger Double Clevis	4	4
100667	Oilite Bushing	4	4
243802	**Hdw Pkg 5iOD Swing Beam.**	1	1
100198	$^{3}/_{8}$" x 1 $^{1}/_{8}$" BHCS w/Pin, SST	8	8
234397	BHCS 6LP LTHD 7/16 x 1 11/16i, SST	8	8
100292	$^{3}/_{8}$" x 1 $^{1}/_{4}$"BHCS w/Pin Ltd. Thread, SST	4	4
234937	$^{7}/_{16}$" D Cut Washer, SST	16	16
156846	Play Safe Label, 2-12 Yrs.	1	1
100330	$^{7}/_{16}$" Nylok Hex Nut	8	8
182213	Hot Surface Warning Label	1	1
182212	Entanglement Warning Label	1	1
115176	Hard Surface Warning Label	1	1
100351	$^{3}/_{8}$" T Nut, SST	8	8

*** = 5" Half Clamps From 2 PL. End Of Beam Need To Be Used.**

Specifications

Post: See PlayBooster® (PB) General Specifications.

Swing Beam: Weldment comprised of tee clamps and 5" O.D. extruded 6005-T5 aluminum alloy tube with a .125" wall. Finish: ProShield®, color specified.

Clamp: Cast aluminum. Finish: ProShield,, color specified.

Fasteners: Primary fasteners shall be socketed and pinned tamperproof in design, stainless steel (SST) per ASTM F 879 unless otherwise indicated (see specific product installation/ specifications).

Installation Time: **2-Place** - Approx. 6 man hours
Additional Bay - Approx. 3 man hours

Concrete Req.: **2-Place** - Approx. 14 cu. ft.
Additional Bay - Approx. 7 cu. ft.

Area Req: **2-Place** - 24'-1" x 24' (7,3 m x 7,31 m) Full bucket seats.
2-Place - 24'-1" x 32' (7,3 m x 9,75 m) For all other seats.
Additional Bay - 11'-8" x 24' (3,56 m x 7,31 m) Full bucket seats.
Additional Bay - 11'-8" x 32' (3,56 m x 9,75 m) For all other seats.

Weight: **2-Place** - 244 lbs.
Additional Bay - 141 lbs.

Installation Instructions

1) Dig footings spaced as shown. Refer to Concrete Footing Detail.
2) Set posts in footing holes and attach swing beam using 5" half clamps with $^{7}/_{16}$" BHCS w/Pin, $^{7}/_{16}$" D-Cut Washers, and $^{7}/_{16}$" Nylok nuts. Refer to the Swing Beam Attachment Detail. Center of beam should be 99 $^{3}/_{4}$" above finished grade. When installing back to back swing beams refer to the Back To Back Tee Clamps Detail. **NOTE:** *Tighten all BHCS w/ pin equally.*
3) Level beam and plumb posts and temporarily prop in position. Pour concrete footings and let cure for 72 hours before proceeding.
4) Locate, mark and attach swing hanger clamps to beam in locations shown. Refer to the Swing Hanger Clamp Attachment Detail.
5) **NOTE:** *Refer to specific swing seat installation document for attaching chains and seats.*
6) Install $^{1}/_{4}$" x $^{5}/_{8}$" drive rivets in all 5" half clamps. Refer to the Typical Offset Hanger Clamp Spec Sheet. Refer to the Back To Back Tee Clamps Detail.
7) Apply Play Safe and Warning Labels, as shown.
8) Install protective surfacing before users are allowed to play on the swing.

Specifications are subject to change without notice.

ECO 0101316 Document 24382200 replaces 22455500. Clamp hardware package change.

landscape structures®

ISO 14001 CERTIFIED

ISO 9001 Certified

SAFETY NOTE

Choose a protective surfacing material that has a Critical Height Value of at least the height of the Highest Accessible Part/Fall Height of the adjacent equipment. (Ref. ASTM F1487.)

DETAIL
BEAM ATTACHMENT

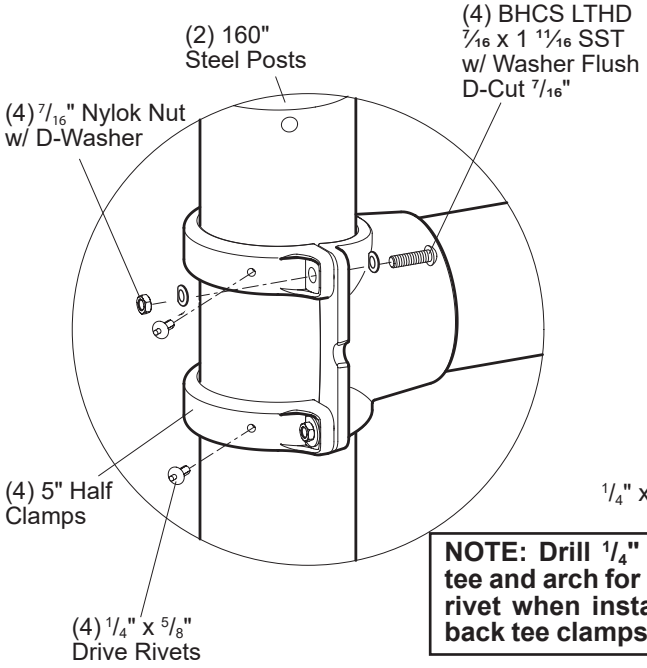

DETAIL
BACK TO BACK TEE CLAMPS

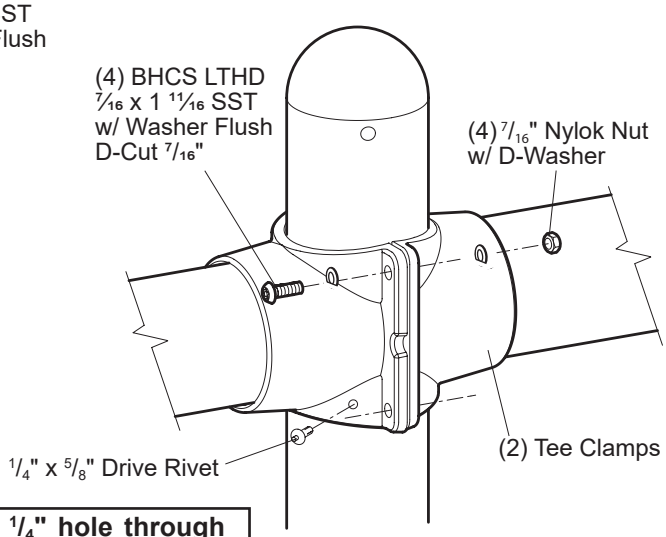

NOTE: Drill 1/4" hole through tee and arch for 1/4" x 5/8" drive rivet when installing back to back tee clamps.

NOTE: Tighten all BHCS w/Pin equally.

DETAIL
SWING HANGER ATTACHMENT

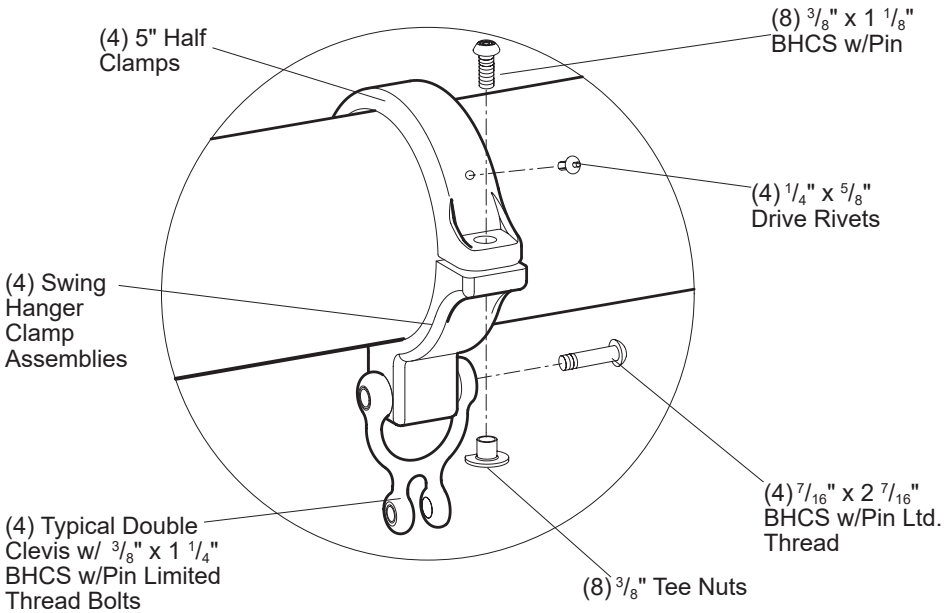

Swings 177344/177345 Single Post Swing Frame, 52" Bury

601 7TH STREET SOUTH, DELANO, MINNESOTA 55328-8605 888-574-4678 LSI Install Help 888-438-6574 LSI Direct 763-972-5200 Int. FAX (763) 972-3185

© 2016 by Landscape Structures. All rights reserved.

Document #24382200

landscape structures®

ISO 14001 CERTIFIED

ISO 9001 Certified

SAFETY NOTE

Choose a protective surfacing material that has a Critical Height Value of at least the height of the Highest Accessible Part/Fall Height of the adjacent equipment. (Ref. ASTM F1487.)

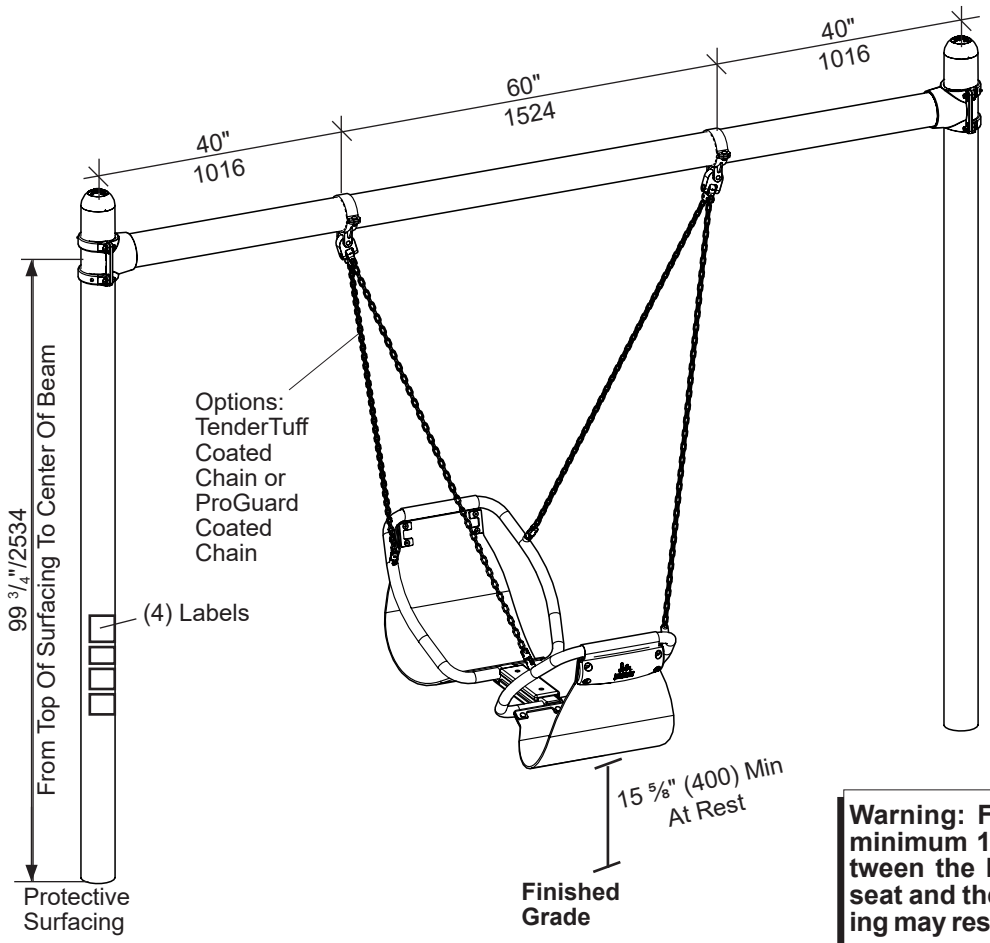

Warning: Failure to meet the minimum 15 ⅝" clearance between the lowest point of the seat and the protective surfacing may result in serious injury.

PLAN VIEW/FOOTING LAYOUT

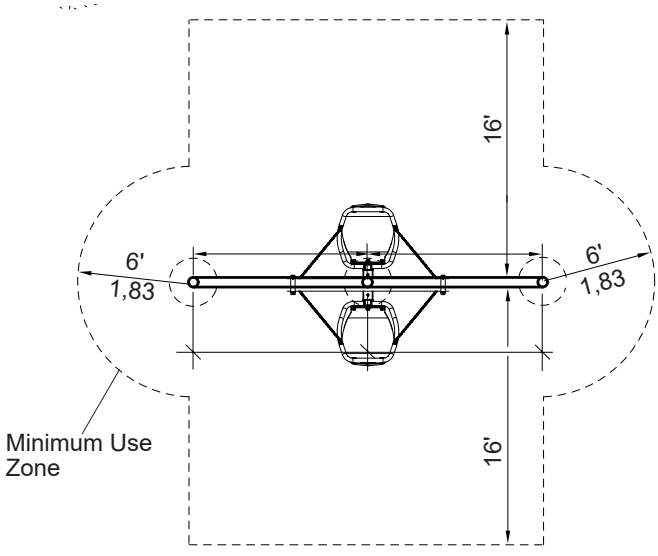

DETAIL
CONCRETE FOOTING

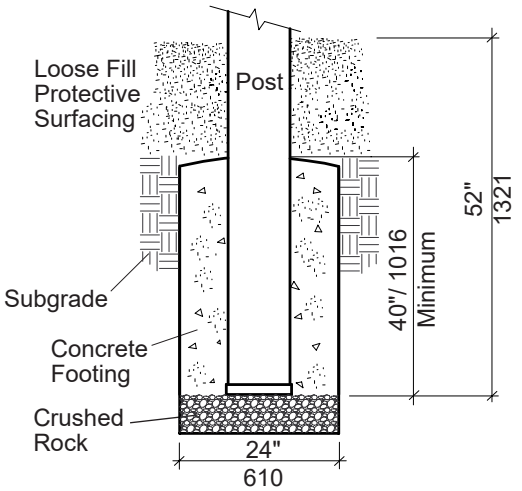

Model #237297 Additional Bay

237296/237297 Friendship Single Post Swing, 52" Bury

Swings

601 7TH STREET SOUTH, DELANO, MINNESOTA 55328-8605 888-574-4678 LSI Install Help 888-438-6574 LSI Direct 763-972-5200 Int. FAX (763) 972-3185

© 2019 by Landscape Structures. All rights reserved.

Document #24263000

Swings 237296/237297 Friendship Single Post Swing, 52" Bury

landscape structures®

Parts List

Part#	Description	Qty.	
105327	Clmp half 5i AL, Specify Color	4	*
175738	Bumper Bucket Seat Rubber	2	2
216492	Beam 5Iod X 140i AL, Specify Color	1	1
220684	Ip Post W/Cap 160i Stl/52i DB, Specify Color	2	1
229492	Belt Bumper Seat Frame, Specify Color	1	1
229497	Belting Friendship Swing Seat	2	2
229500	Channel Cap Top Perm, Black	1	1
230235	Rubber Wrap Belt	2	2
237598	Channel Cap Bottom, Black	1	1
183829	Chn 3/16 P30 62-1/2i (ProGuard Chains)	4	4
237686	Clmp Half 1-3/4i Wd SST, Specify Color	2	2
237734	Swing Hanger Asm, Specify Color	2	2
242397	Chn 3/16 P30 62-1/2i (TT Chains), Specify Color	4	4
237915	Top Belt Plate, Black	4	4
237916	Lower Belt Plate, Black	2	2
238080	**Hdw Pkg 5i Swing Beam F/Friendship Swing Seat**	**1**	**1**
100198	BHCS 6LP 3/8X1-1/8i SST	4	4
100330	Nut Hex Nylok 7/16-14 SST	8	8
100365	Washer Flat SAE 3/8i SST	4	4
100610	Rivet 1/4X5/8i Drv AS	4	4
100611	Rivet 1/4X3/8i Drv AS	2	2
115176	Label Hd Srf Warning ASTM	1	1
136931	Nut Hex Nylok 3/8-16 SST	4	4
156846	Label Play Safe 2-12 Yrs	1	1
182212	Label Entanglement Warning	1	1
182213	Label Hot Surface Warning	1	1
234397	BHCS 6LP LTHD 7⁄16 X 1 11⁄16, SST	8	8
234937	Washer Fl D-Cut 7/16i SST	16	16
238081	**Hdw Pkg Friendship Swing Seat**	**1**	**1**
100173	BHCS 6LP 3/8X2i SST Pat	2	2
100353	Flg Nut 6LP 3/8-16 SST	10	10
137091	FHCS 3/8X1i SST Pat	8	8
148686	FHCS 6LP 3/8X3/4i SST Pat	6	6
238082	**Hdw Pkg Chain Swivels W/Bolts And Spacers (ProGuard)**	**1**	**1**
100290	BHCS 6LP LTHD 3/8 x 7/8i SST	12	12
112501	Spacer Nylon 3/8i Id	8	8
127179	Bushing 5/8Od X 3/8 Lg SST	4	4
218781	Rope Swivel Tab	4	4
238083	**Hdw Pkg Chain Swivels W/Bolts (TTChains)**	**1**	**1**
100290	BHCS 6LP LTHD 3/8X7/8i SST	12	12
127179	Bushing 5/8Od X 3/8 Lg SST	4	4
218781	Rope Swivel Tab	4	4

*** = 5" Half Clamps From 2 PL. End Of Beam Need To Be Used.**

Specifications

Post: See PlayBooster® (PB) General Specifications.

Belt: Made from .315" thick mini rough top 3-ply rubber belting with polyester fabric plys, black in color.

Swing Beam: Weldment comprised of tee clamps and 5" O.D. extruded 6005-T5 aluminum alloy tube with a .125" wall. Finish: ProShield®, color specified.

Clamp: Cast aluminum. Finish: ProShield,, color specified.

Fasteners: Primary fasteners shall be socketed and pinned tamperproof in design, stainless steel (SST) per ASTM F 879 unless otherwise indicated (see specific product installation/ specifications).

Installation Time: **Swing** - Approx. 6 man hours
Additional Bay - Approx. X man hours

Concrete Req.: **Swing** - Approx. 14 cu. ft.
Additional Bay - Approx. 7 cu. ft.

Area Req: **Swing** - 24' 1" x 32' (7, 34m) x (9, 75m)
Additional Bay - 18' 1" x 32' (5,51m) x (9,75m)

Weight: 1 Place w/ProGuard Chain 351 lbs.
1 Place w/TenderTuff Chain 354 lbs.
Additional Bay w/ProGuard Chain 252 lbs.
Additional Bay w/TenderTuff Chain 255 lbs.

Installation Instructions

1) Dig footings spaced as shown. Refer to Concrete Footing Detail.
2) Set posts in footing holes and attach swing beam using 5" half clamps with $^{7}/_{16}$" BHCS w/Pin, $^{7}/_{16}$" D-Cut Washers, and $^{7}/_{16}$" Nylok nuts. Refer to the Swing Beam Attachment Detail. Center of beam should be 99 $^{3}/_{4}$" above finished grade. When installing back to back swing beams refer to the Back To Back Tee Clamps Detail. **NOTE:** *Tighten all BHCS w/ pin equally.*
3) Level beam and plumb posts and temporarily prop in position. Pour concrete footings and let cure for 72 hours before proceeding.
4) Locate, mark and attach swing hanger clamps to beam in locations shown. Refer to the Swing Hanger Clamp Attachment Detail.
5) **SEAT:** Assemble seat as shown in friendship swing detail.
6) Attach chains to seats as shown in swing to chain attachment detail
7) Install $^{1}/_{4}$" x $^{5}/_{8}$" drive rivets in all 5" half clamps. Refer to the Typical Offset Hanger Clamp Spec Sheet. Refer to the Back To Back Tee Clamps Detail.
8) Apply Play Safe and Warning Labels, as shown.
9) Install protective surfacing before users are allowed to play on the swing.

Specifications are subject to change without notice.

ECO 0101294 Document 24262900 replaces 23807400. Revised chain height to remain EN compliant.
ECO 0101316 Change no revision. Change beam and tee clamp detail to reflect correct hardware.
Change no revision. Added Belting Specification. 3-13-2019

landscape structures®

ISO 14001 CERTIFIED

ISO 9001 Certified

SAFETY NOTE

Choose a protective surfacing material that has a Critical Height Value of at least the height of the Highest Accessible Part/Fall Height of the adjacent equipment. (Ref. ASTM F1487.)

DETAIL
BEAM ATTACHMENT

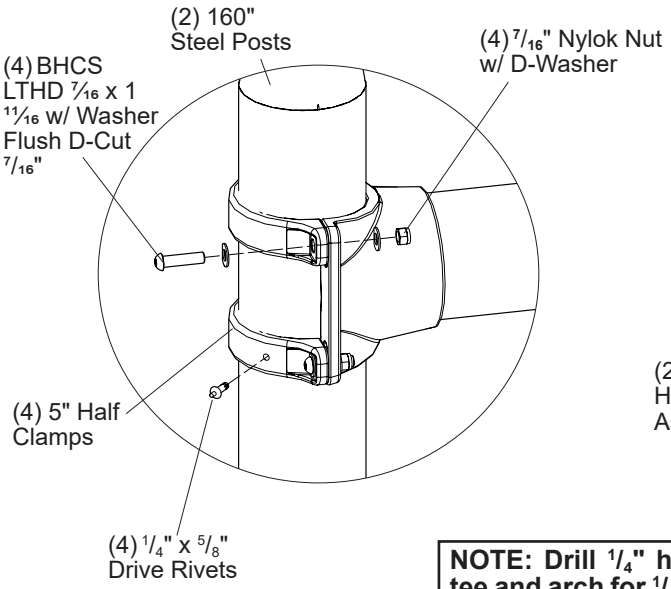

NOTE: Drill 1/4" hole through tee and arch for 1/4" x 5/8" drive rivet when installing back to back tee clamps.

DETAIL
SWING HANGER ATTACHMENT

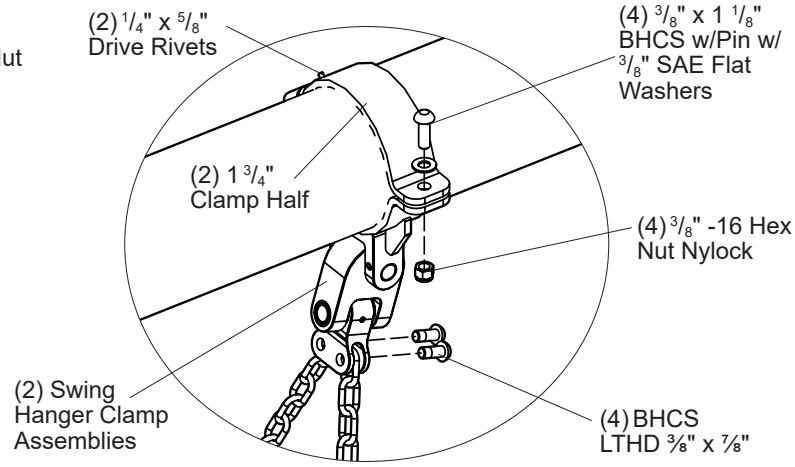

NOTE: Tighten all BHCS w/Pin equally.

DETAIL
SWING TO CHAIN ATTACHMENT

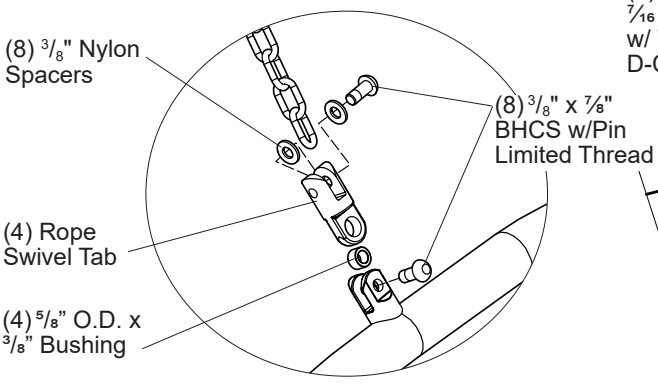

DETAIL
BACK TO BACK TEE CLAMPS

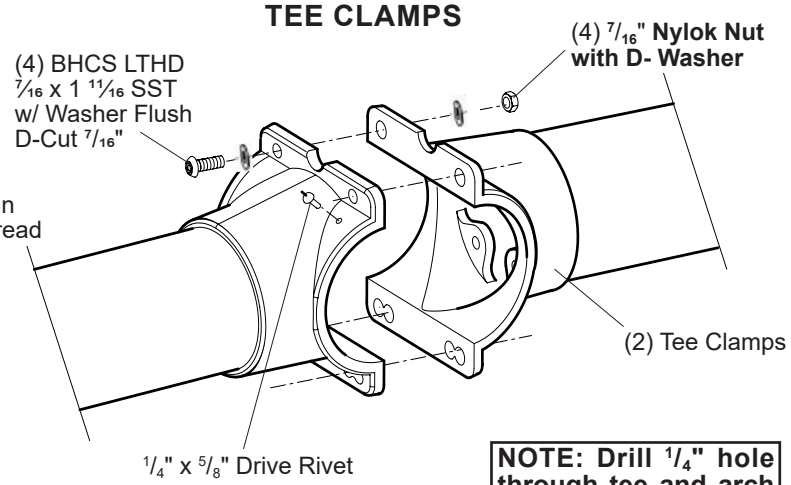

NOTE: Drill 1/4" hole through tee and arch for 1/4" x 5/8" drive rivet when installing back to back tee clamps.

237296/237297 Friendship Single Post Swing, 52" Bury

Swings

601 7TH STREET SOUTH, DELANO, MINNESOTA 55328-8605 888-574-4678 LSI Install Help 888-438-6574 LSI Direct 763-972-5200 Int. FAX (763) 972-3185

© 2019 by Landscape Structures. All rights reserved.

Document #24263000

landscape structures®

ISO 14001 CERTIFIED

ISO 9001 Certified

SAFETY NOTE

Choose a protective surfacing material that has a Critical Height Value of at least the height of the Highest Accessible Part/Fall Height of the adjacent equipment. (Ref. ASTM F1487.)

DETAIL
FRIENDSHIP SWING ASSEMBLY

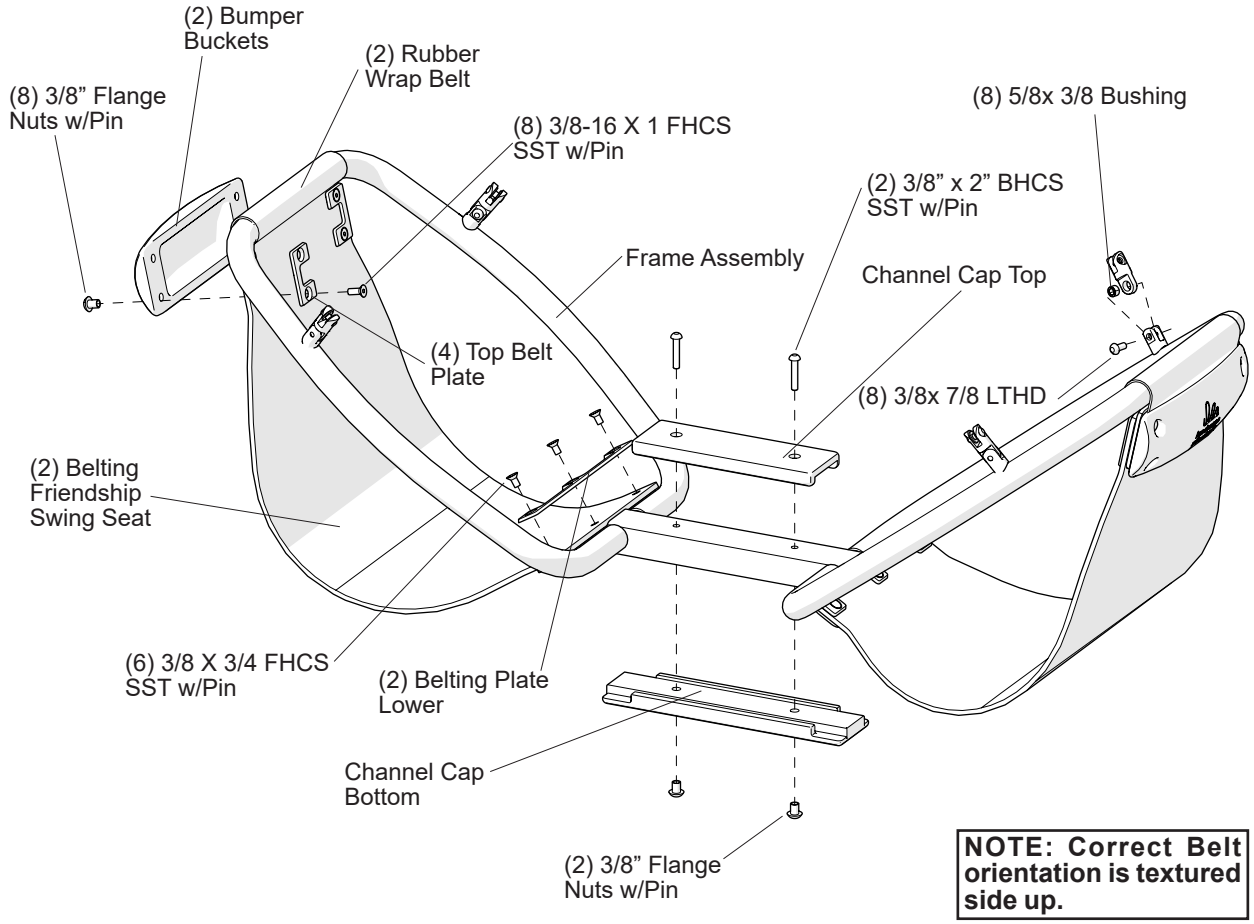

NOTE: Correct Belt orientation is textured side up.

DETAIL
SIDE VIEW

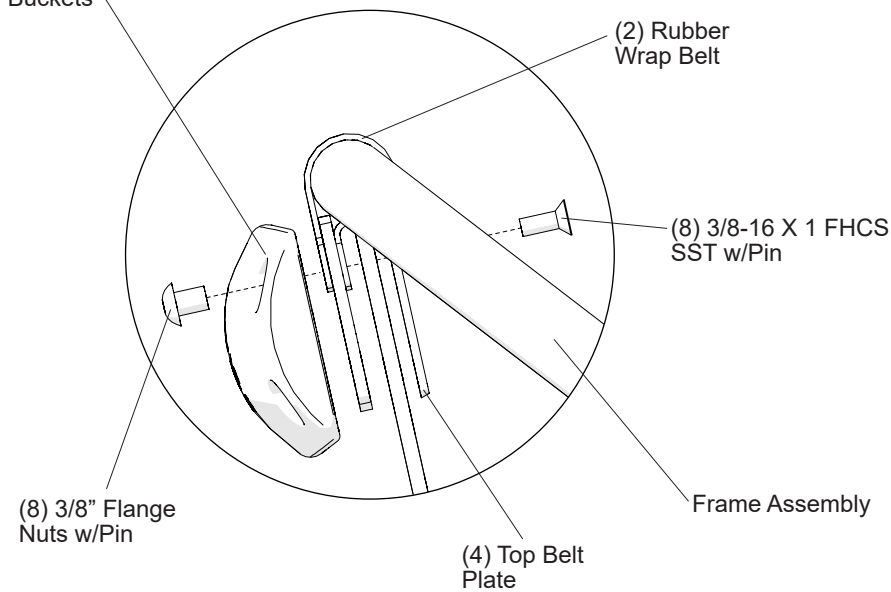

237296/237297 Friendship Single Post Swing, 52" Bury

Swings

601 7TH STREET SOUTH, DELANO, MINNESOTA 55328-8605 888-574-4678 LSI Install Help 888-438-6574 LSI Direct 763-972-5200 Int. FAX (763) 972-3185

© 2019 by Landscape Structures. All rights reserved.

landscape structures®

ISO 14001 CERTIFIED

ISO 9001 Certified

21325600

DETAIL
SIGN ATTACHMENT

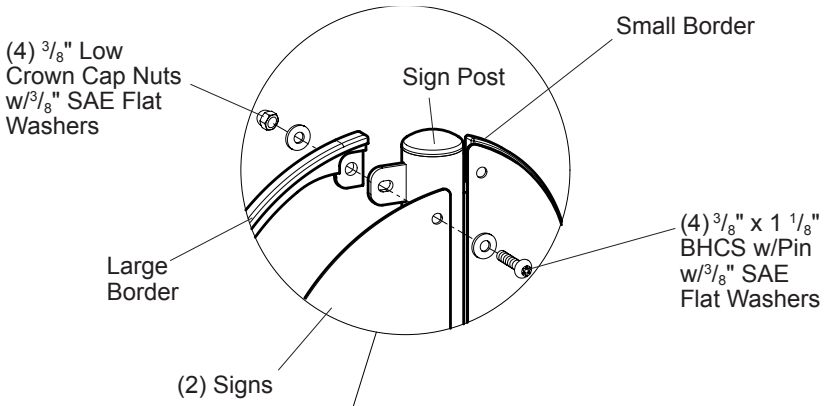

DETAIL
SURFACE MOUNT

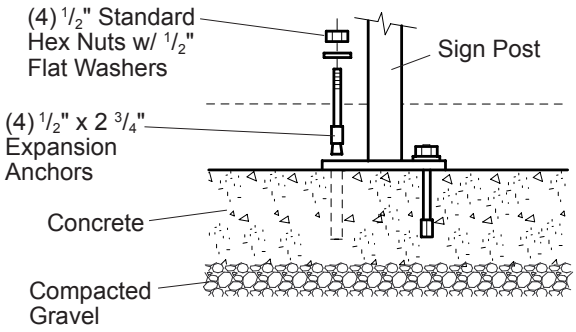

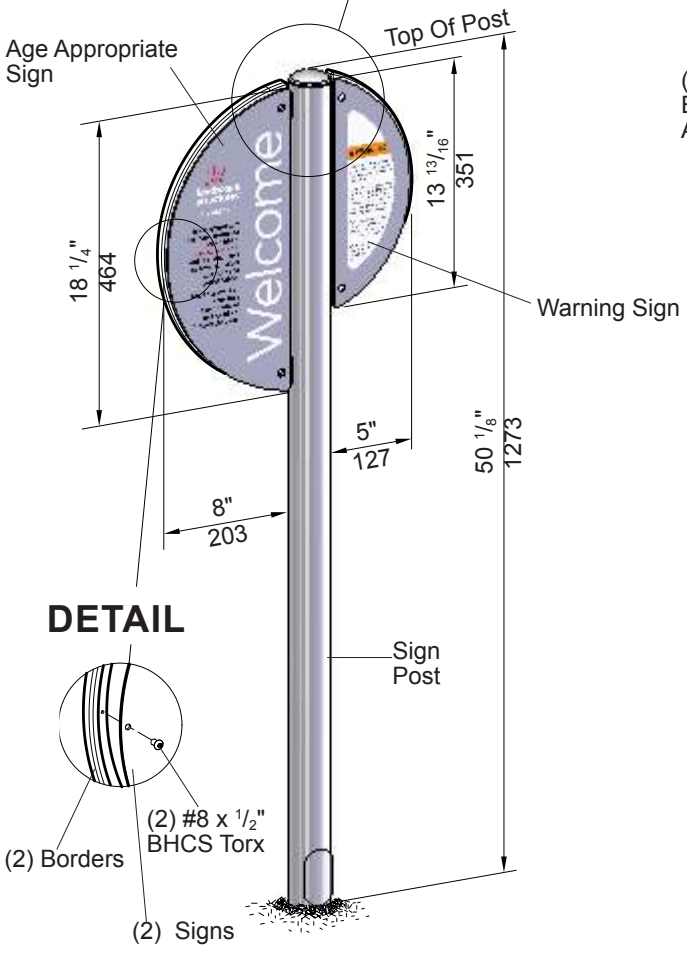

DETAIL

DETAIL
DIRECT BURY FOOTING

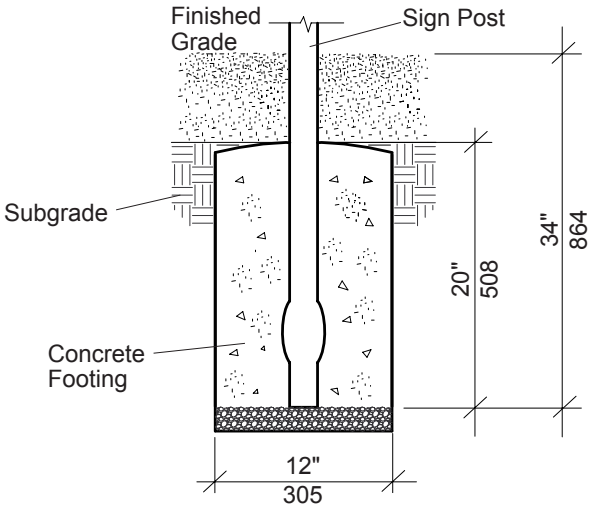

Model 182503 - Landscape Structures Provided Welcome Sign
Model 182504 - Welcome Sign

Signs

Welcome Sign

601 7TH STREET SOUTH, DELANO, MINNESOTA 55328-8605 888-574-4678 LSI Install Help 888-438-6574 LSI Direct 763-972-5200 Int. FAX (763) 972-3185

© 2016 by Landscape Structures. All rights reserved.

landscape structures®

Welcome Sign

Parts List

Part#	Description	Qty.
219911	Warning Sign,Gray	1
219912	Age Appropriate Sign, 2-12 Years, Gray	*
219913	Age Appropriate Sign, 2-5 Years, Gray	*
219914	Age Appropriate Sign, 5-12 Years, Gray	*
219915	Age Appropriate Sign, 1 1/2-5 Years, Gray	*
219916	Age Appropriate Sign, 1 1/2-12 Years, Gray	*
219918	Age Appropriate Sign, 6-23 Months, Gray	*
180598	Sign Post (DB), Specify Color	*
181119	Sign Post (SM), Specify Color	*
193782	Large Border, Black	1
193783	Small Border, Black	1
213258	**Age/Warning Sign Hardware Package**	1
100198	3/8" x 1 1/8" BHCS w/Pin, SST	4
100349	3/8" Low Crown Cap Nut, SST	4
100365	3/8" SAE Flat Washer, SST	8
168323	#8 x 1/2" BHCS Torx, SST	2
169413	1/4-6 Lobe T-15 Tamp. Bit	1
121348	**4 Hole (SM) Hardware Package**	1
100266	1/2" x 2 3/4" Expansion Anchor	4
100322	1/2" Standard Hex Nut, SST	4
100363	1/2" Flat Washer, SST	4

DB = Direct Bury
SM = Surface Mount
*** = Quantity Determined By Your Order**

Specifications

Sign Panel: Panel is fabricated from $^{1}/_{8}$" (.125")(3,17 mm) aluminum plate. Finish: ProShield®, gray in color. **(Sign)** Digital image is transfered to a $^{1}/_{8}$" (.125")(3,17 mm) ProShield coated aluminum plate, then infused into the ProShield.

Border: Permalene, black in color.

Post: Weldment comprised 2.375" (60,33 mm) O.D. RS20 (.095-.105) (2,41 mm-2,67 mm) wall galvanized tube, $^{1}/_{4}$" (6,35 mm) HRPO steel sheet and aluminum post cap. Finish: ProShield, color specified.

Fasteners: Primary fasteners shall be socketed and pinned tamperproof in design, stainless steel (SST) per ASTM F 879 unless otherwise indicated (see specific product installation/specifications).

Installation Time: **(DB)** Approx. 1 man hour
(SM) Approx. $^{1}/_{2}$ man hour

Concrete Req: Approx. 1.31 cu. ft.

Weight: **(DB)** - 24 lbs.
(SM) - 27 lbs.

Installation Instructions

Direct Bury

1) Dig footing hole to depth and diameter shown.
2) Attach sign panels and borders to post as shown, using $^{3}/_{8}$" x 1 $^{1}/_{8}$" BHCS with $^{3}/_{8}$" SAE flat washers and $^{3}/_{8}$" low crown cap nuts with $^{3}/_{8}$" SAE flat washers. Attach signs to borders using #8 x $^{1}/_{2}$" BHCS Torx.
3) Set sign assembly in footing hole and temporarily brace in plumb position.
4) Pour concrete footing. After concrete has cured, remove bracing.

Surface Mount

1) Attach sign panels and borders to post as shown, using $^{3}/_{8}$" x 1 $^{1}/_{8}$" BHCS with $^{3}/_{8}$" SAE flat washers and $^{3}/_{8}$" low crown cap nuts with $^{3}/_{8}$" SAE flat washers. Attach signs to borders using #8 x $^{1}/_{2}$" BHCS Torx.
2) With sign in proper position, using a $^{1}/_{2}$" masonry bit and hammer drill, drill 3" deep holes into concrete slab through holes in post plate. Tap $^{1}/_{2}$" x 2 $^{3}/_{4}$" expansion anchors into holes and secure using $^{1}/_{2}$" standard hex nuts with $^{1}/_{2}$" flat washers.

Specifications are subject to change without notice.

ECO 0100730 Document 22074200 replaces 21325600. Replaced signs.

landscape structures®

ISO 14001 CERTIFIED

ISO 9001 Certified

SAFETY NOTE

Choose a protective surfacing material that has a Critical Height Value of at least the height of the Highest Accessible Part/Fall Height of the adjacent equipment. (Ref. ASTM F1487.)

20059400

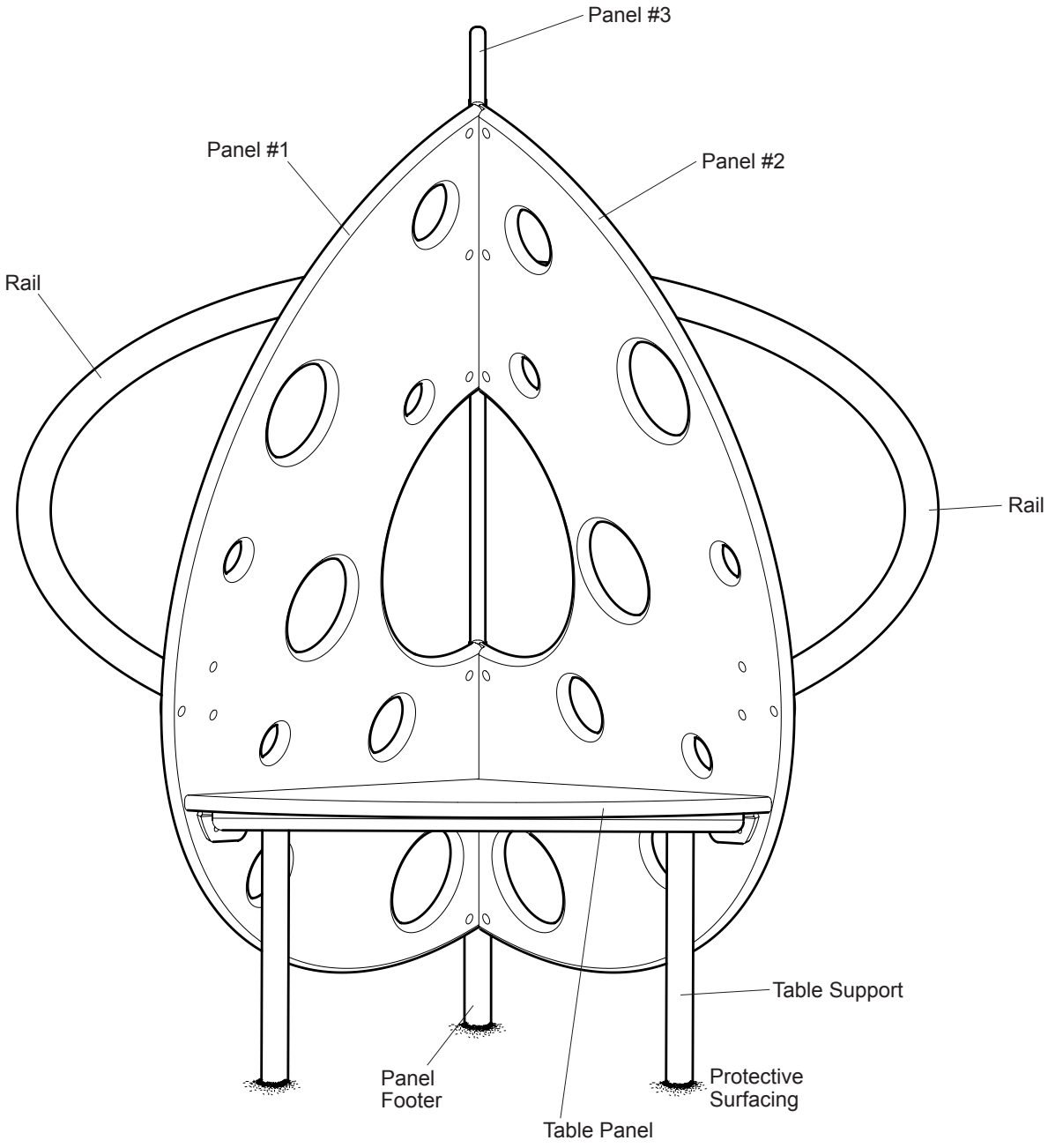

Climbers

200677 Wee Planet™ Climber

601 7TH STREET SOUTH, DELANO, MINNESOTA 55328-8605 888-574-4678 LSI Install Help 888-438-6574 LSI Direct 763-972-5200 Int. FAX (763) 972-3185

© 2016 by Landscape Structures. All rights reserved.

landscape structures®

ISO 14001 CERTIFIED

ISO 9001 Certified

SAFETY NOTE

Choose a protective surfacing material that has a Critical Height Value of at least the height of the Highest Accessible Part/Fall Height of the adjacent equipment. (Ref. ASTM F1487.)

200594c

DETAIL

WEE PLANET CLIMBER ASSEMBLY (TOP VIEW)

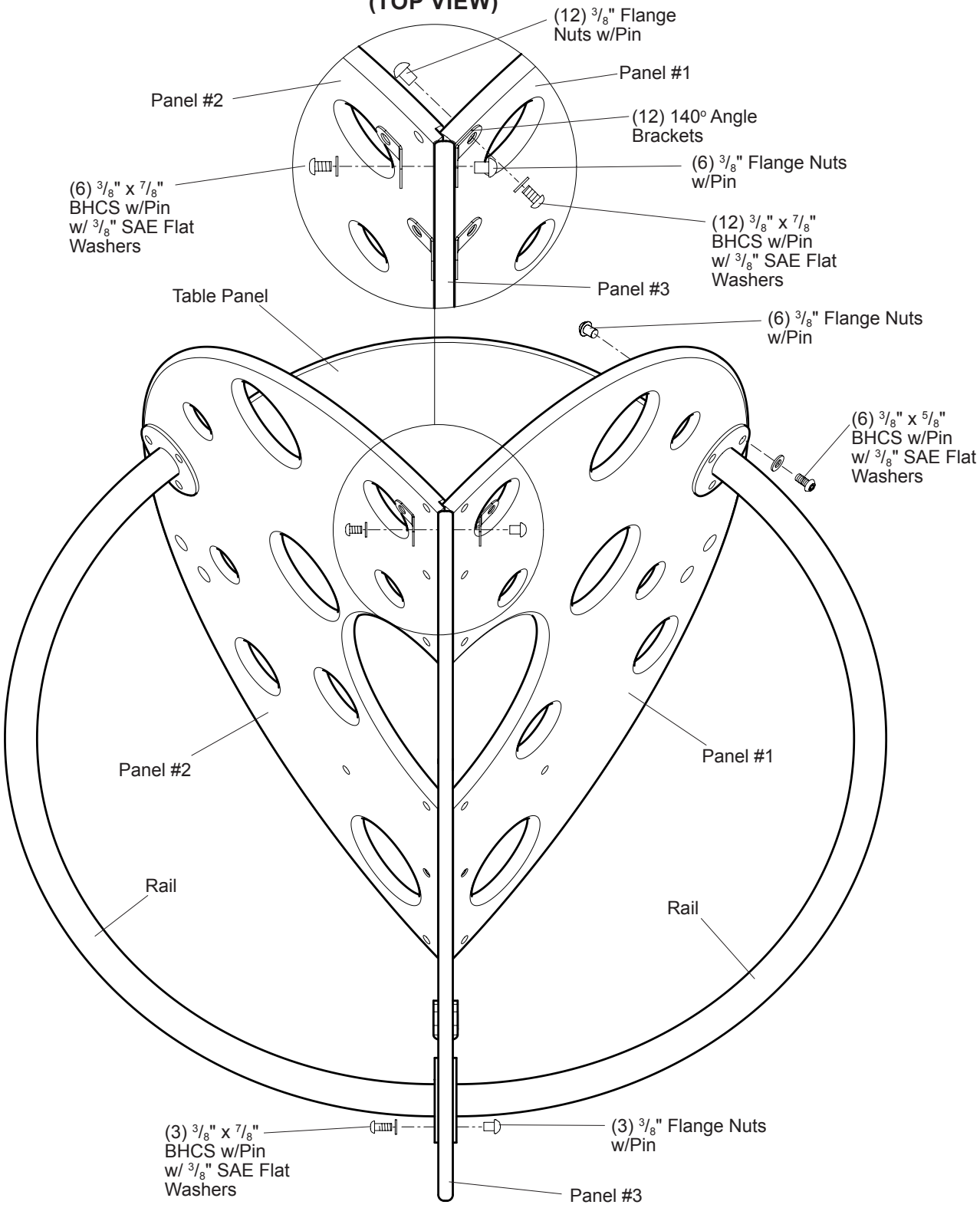

200677 Wee Planet™ Climber

Climbers

601 7TH STREET SOUTH, DELANO, MINNESOTA 55328-8605 888-574-4678 LSI Install Help 888-438-6574 LSI Direct 763-972-5200 Int. FAX (763) 972-3185

© 2016 by Landscape Structures. All rights reserved.

landscape structures®

ISO 14001 CERTIFIED

ISO 9001 Certified

SAFETY NOTE

Choose a protective surfacing material that has a Critical Height Value of at least the height of the Highest Accessible Part/Fall Height of the adjacent equipment. (Ref. ASTM F1487.)

200594b

DETAIL

WEE PLANET CLIMBER ASSEMBLY (SIDE VIEW)

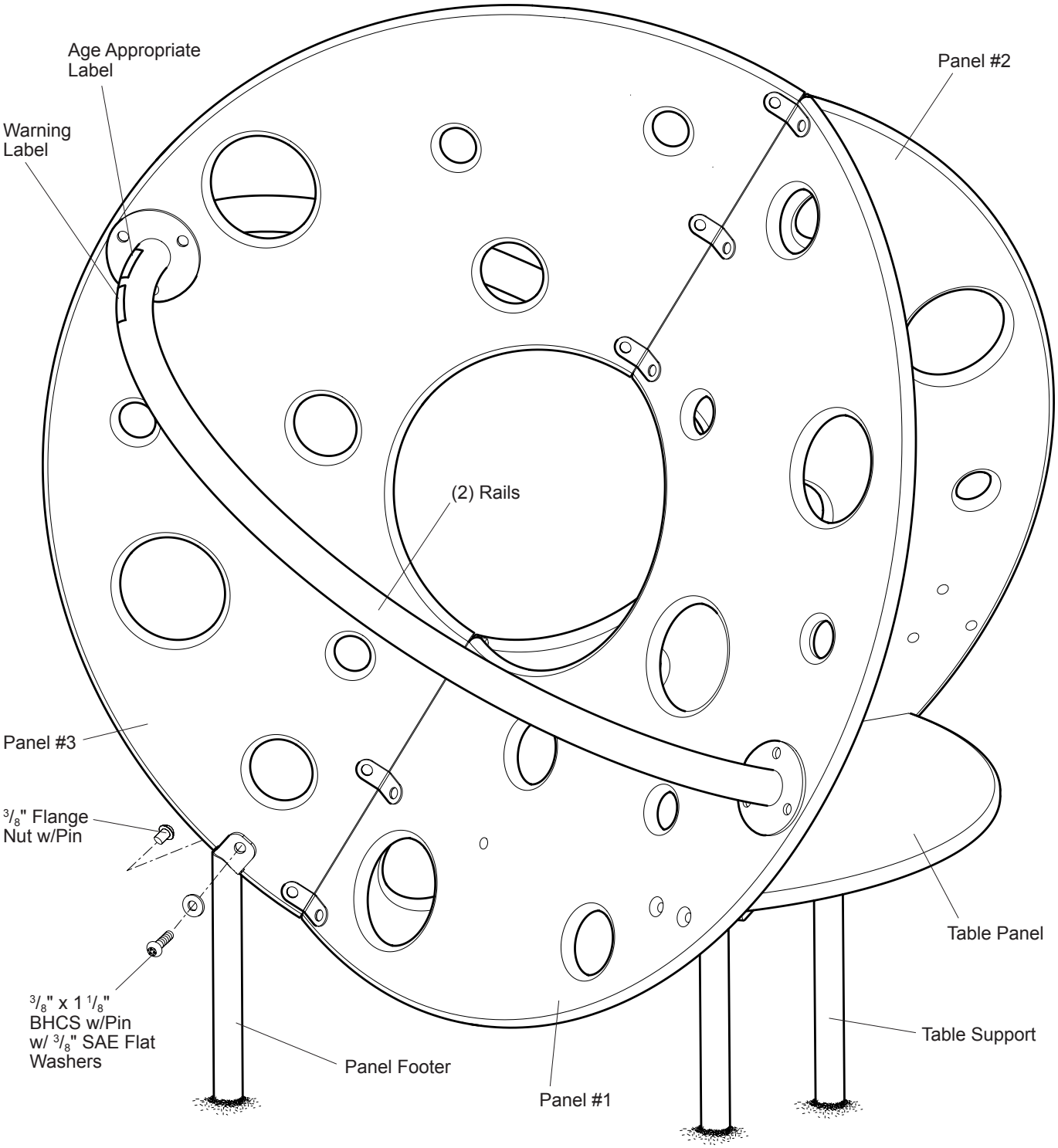

Climbers

200677 Wee Planet™ Climber

601 7TH STREET SOUTH, DELANO, MINNESOTA 55328-8605 888-574-4678 LSI Install Help 888-438-6574 LSI Direct 763-972-5200 Int. FAX (763) 972-3185

© 2016 by Landscape Structures. All rights reserved.

Document #21895400

landscape structures®

ISO 14001 CERTIFIED

ISO 9001 Certified

SAFETY NOTE

Choose a protective surfacing material that has a Critical Height Value of at least the height of the Highest Accessible Part/Fall Height of the adjacent equipment. (Ref. ASTM F1487.)

200594a

DETAIL
TABLE ATTACHMENT

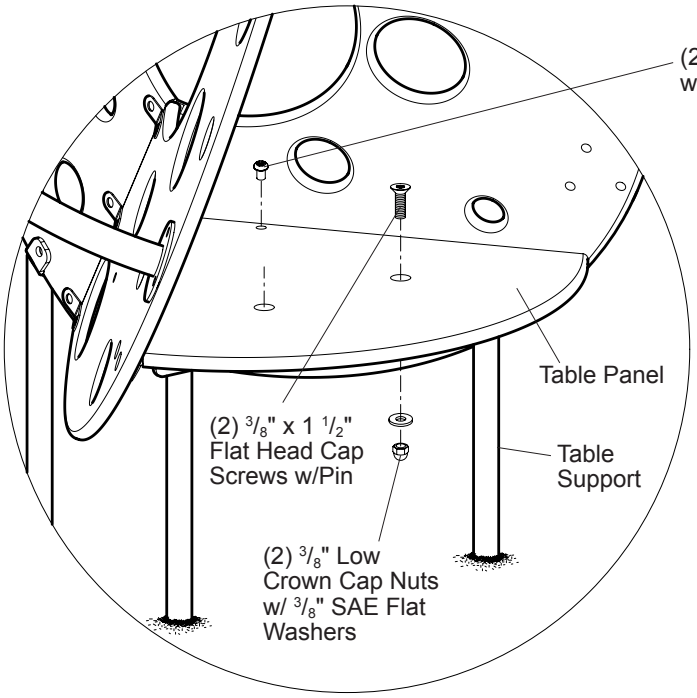

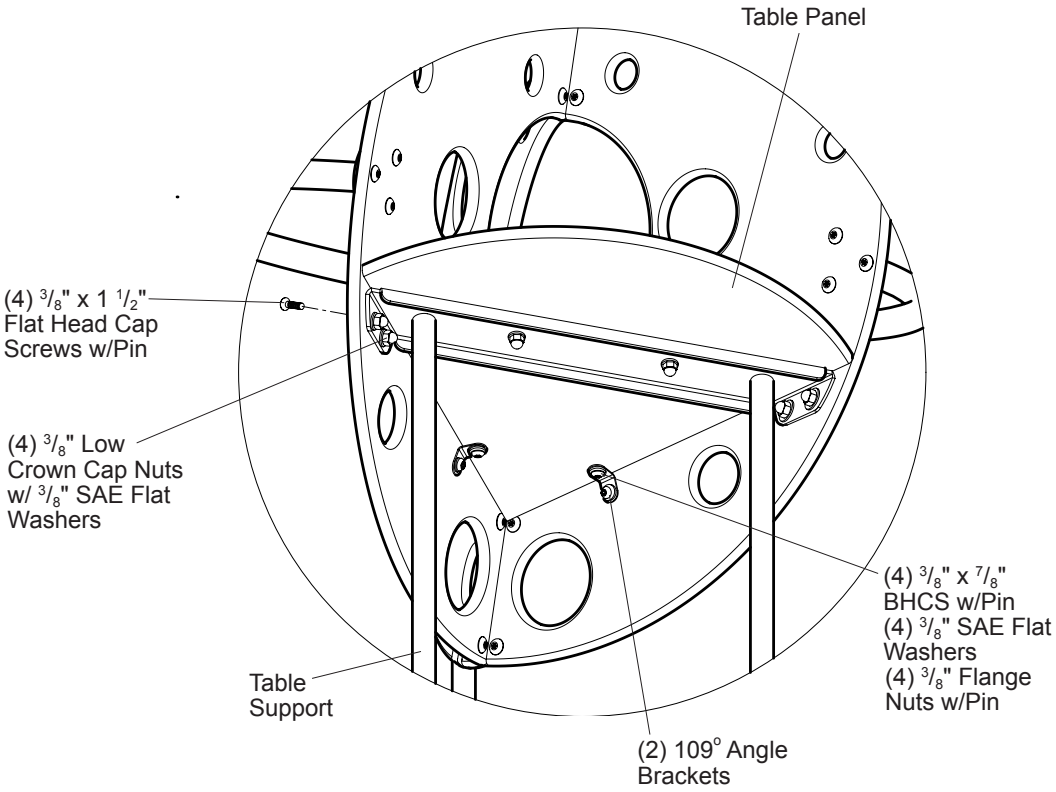

Climbers

200677 Wee Planet™ Climber

601 7TH STREET SOUTH, DELANO, MINNESOTA 55328-8605 888-574-4678 LSI Install Help 888-438-6574 LSI Direct 763-972-5200 Int. FAX (763) 972-3185

© 2016 by Landscape Structures. All rights reserved.

landscape structures®

ISO 14001 CERTIFIED

ISO 9001 Certified

SAFETY NOTE

Choose a protective surfacing material that has a Critical Height Value of at least the height of the Highest Accessible Part/Fall Height of the adjacent equipment. (Ref. ASTM F1487.)

202456d

DETAIL
SURFACE MOUNT

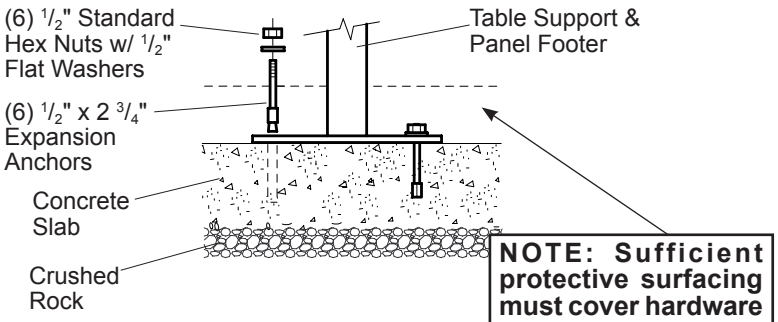

DETAIL
DIRECT BURY

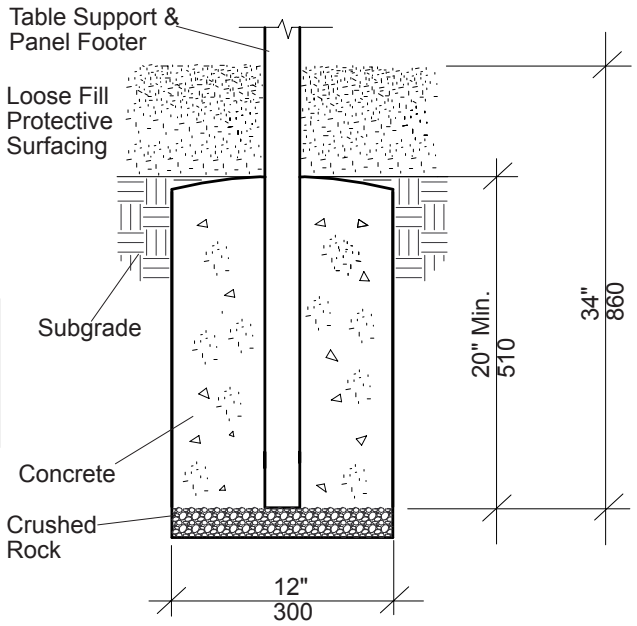

PLAN VIEW/FOOTING LAYOUT
(BOTTOM VIEW)

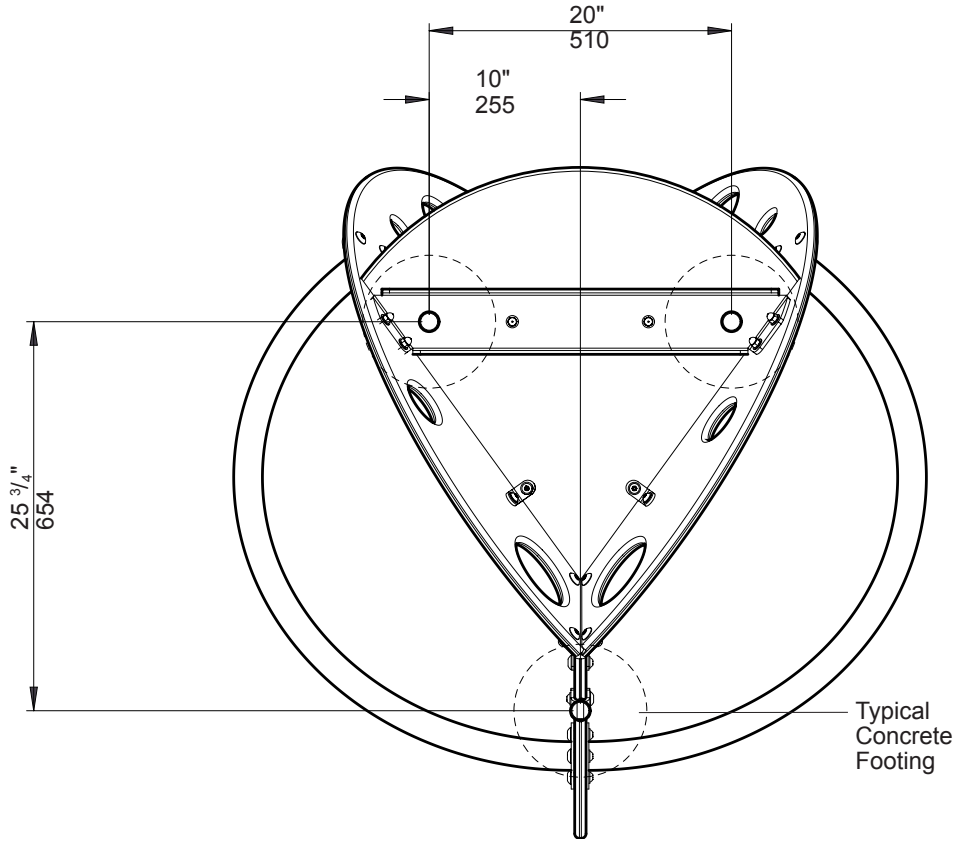

200677 Wee Planet™ Climber

Climbers

601 7TH STREET SOUTH, DELANO, MINNESOTA 55328-8605 888-574-4678 LSI Install Help 888-438-6574 LSI Direct 763-972-5200 Int. FAX (763) 972-3185

© 2016 by Landscape Structures. All rights reserved.

Climbers 200677 Wee Planet™ Climber

Parts List

Part#	Description	Qty.
173361	Panel #1, Specify Color	1
173362	Panel #2, Specify Color	1
200597	Panel #3, Specify Color	1
173364	Table Panel, Specify Color	1
173365	Table Support, DB, Specify Color	1
173939	Table Support, SM, Specify Color	1
201389	Panel Footer, DB, Specify Color	1
201390	Panel Footer, SM, Specify Color	1
173367	Rail, Specify Color	2
173935	109° Angle Bracket, Specify Color	2
173936	140° Angle Bracket, Specify Color	12
217716	**Wee Planet Climber Hardware Package**	1
100195	3/8" x 5/8" BHCS w/Pin, SST	6
100196	3/8" x 7/8" BHCS w/Pin, SST	25
100198	3/8" x 1 1/8" BHCS w/Pin, SST	1
100349	3/8" Low Crown Cap Nut, SST	6
100353	3/8" Flange Nut w/Pin, SST	34
100365	3/8" SAE Flat Washer, SST	38
151421	3/8" x 1 1/2" FHCS w/Pin, SST	6
183064	Warning Label	1
200332	Age Appropriate Label 2-12 Yrs.	1
111392	**2-Hole (SM) Hardware Package**	3
100266	1/2" x 2 3/4" Expansion Anchor	6
100322	1/2" Standard Hex Nut, SST	6
100363	1/2" Flat Washer, SST	6

DB = Direct Bury
SM = Surface Mount

Specifications

Panels: Permalene®, color specified.

Table Support: Weldment comprised of 1.315" O.D. RS20 (.080" - 090" Wall) galvanized steel tubing and 1/4" HRPO flat steel. Finish: ProShield, color specified.

Panel Footer: Weldment comprised of 1.315" O.D. RS20 (.080" - 090" Wall) galvanized steel tubing and 1/4" HRPO flat steel. Finish: ProShield, color specified.

Rail: Fabricated from 1.900" O.D. RS20 (.090"-.100" Wall) galvanized steel tubing and 3/16" HRPO steel sheet. Finish: ProShield, color specified.

Bracket: Fabricated from 7 GA. (.188") HRPO Zinc plated- Finish: ProShield, color specified.

Fasteners: Primary fasteners shall be socketed and pinned tamperproof in design, stainless steel (SST) per ASTM F 879 unless otherwise indicated (see specific product installation/specifications).

Installation Time: Approx. 2 3/4 man hours
Concrete Req.: Approx. 3.93 cu. ft.
Area Req.: 6' (1,83 m) minimum use zone
Weight: **DB** = 127 lbs.
SM = 124 lbs.
Fall Height: 53" (1350 mm)

Specifications are subject to change without notice.

Installation Instructions

1) **(Direct Bury) Refer to the Plan View/Footing Layout. Refer to sheet 3 of 3.**

2) Attach panels #1 and #2 to panel #3, using 140° brackets, 3/8" x 5/8" BHCS w/ pin with 3/8" SAE flat washers and 3/8" flange nuts with pin. Refer to the Wee Planet Climber Assembly Detail.

3) Attach rails to panel #3, using 3/8" x 7/8" BHCS w/pin with 3/8" SAE flat washers and 3/8" flange nuts with pin. Refer to the Wee Planet Climber Assembly Detail.

4) Attach rails to panels #1 and #2, using 3/8" x 5/8" BHCS w/pin with 3/8" SAE flat washers and 3/8" flange nuts with pin. Refer to the Wee Planet Climber Assembly Detail.

5) Attach table panel to panels #1 and #2, using 109° brackets, 3/8" x 5/8" BHCS w/ pin with 3/8" SAE flat washers and 3/8" flange nuts with pin. Refer to the Table Attachment Detail.

6) Attach table support to table panel, using 3/8" x 1 1/2" Flat Head Cap Screws w/ pin and 3/8" low crown cap nuts with 3/8" SAE flat washers. Refer to the Table Attachment Detail.

7) Attach table support to panels #1 and #2, using 3/8" x 1 1/2" Flat Head Cap Screws w/pin and 3/8" low crown cap nuts with 3/8" SAE flat washers. Refer to the Table Attachment Detail.

8) Attach panel footer to panel #3, using 3/8" x 1 1/8"BHCS w/pin with 3/8" SAE flat washer and 3/8" flange nut w/pin. Refer to the Table Attachment Detail.

9) **(Direct Bury)** With panel footer and table panel support plumb and positioned properly, pour concrete footings. Allow concrete footings to cure for a minimum of 72 hours before users are allowed to play on the structure.

   (Surface Mount) Mark anchor bolt locations on concrete slab through holes in panel footer plate and table panel support plate. Drill 1/2" x 3" deep holes on marks into concrete using a hammer drill and 1/2" masonry bit. Tap expansion anchors into drilled holes. Fasten panel footer plate and table panel support plate to expansion anchors, using 1/2" standard hex nuts with 1/2" flat washers.

10) Apply labels, as shown.

11) Install protective surfacing before users are allowed to play on the structure.

Eco #0100656 Document 218954 replaces 21771900. Changed note to specify Zinc Plated.

landscape structures®

ISO 14001 CERTIFIED

ISO 9001 Certified

SAFETY NOTE

Choose a protective surfacing material that has a Critical Height Value of at least the height of the Highest Accessible Part/Fall Height of the adjacent equipment. (Ref. *ASTM F1487*.)

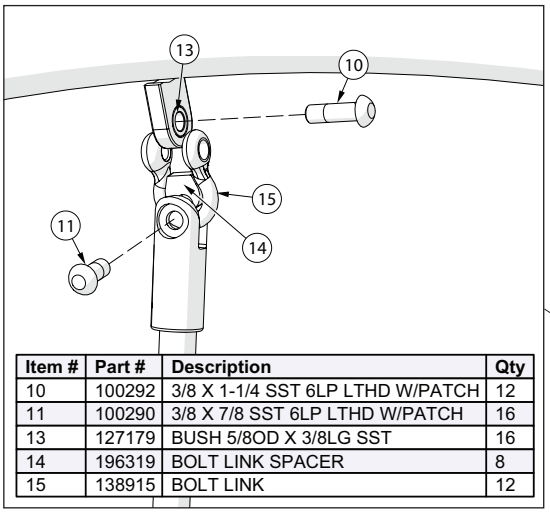

Item #	Part #	Description	Qty
10	100292	3/8 X 1-1/4 SST 6LP LTHD W/PATCH	12
11	100290	3/8 X 7/8 SST 6LP LTHD W/PATCH	16
13	127179	BUSH 5/8OD X 3/8LG SST	16
14	196319	BOLT LINK SPACER	8
15	138915	BOLT LINK	12

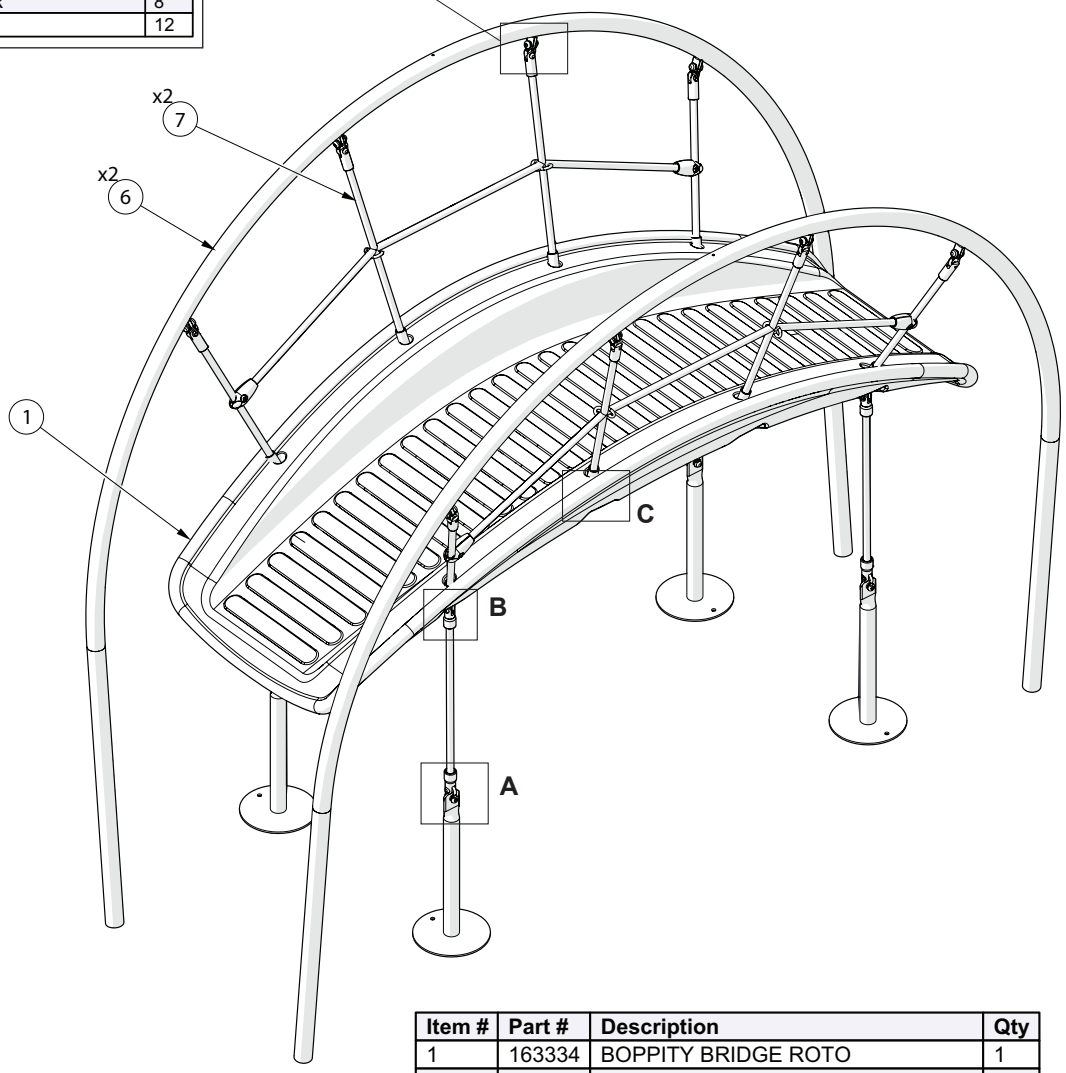

Item #	Part #	Description	Qty
1	163334	BOPPITY BRIDGE ROTO	1
6	225104	CUST INDP BOPPITY SUPPORT PNT	2
7	225137	CUST INDP BOPPITY BRIDGE NET	2

Independent

Custom Boppity Bridge

601 7TH STREET SOUTH, DELANO, MINNESOTA 55328-8605 888-574-4678 LSI Install Help 888-438-6574 LSI Direct 763-972-5200 Int. FAX (763) 972-3185

© 2016 by Landscape Structures. All rights reserved.

landscape structures®

ISO 14001 CERTIFIED

ISO 9001 Certified

SAFETY NOTE

Choose a protective surfacing material that has a Critical Height Value of at least the height of the Highest Accessible Part/Fall Height of the adjacent equipment. (Ref. *ASTM F1487*.)

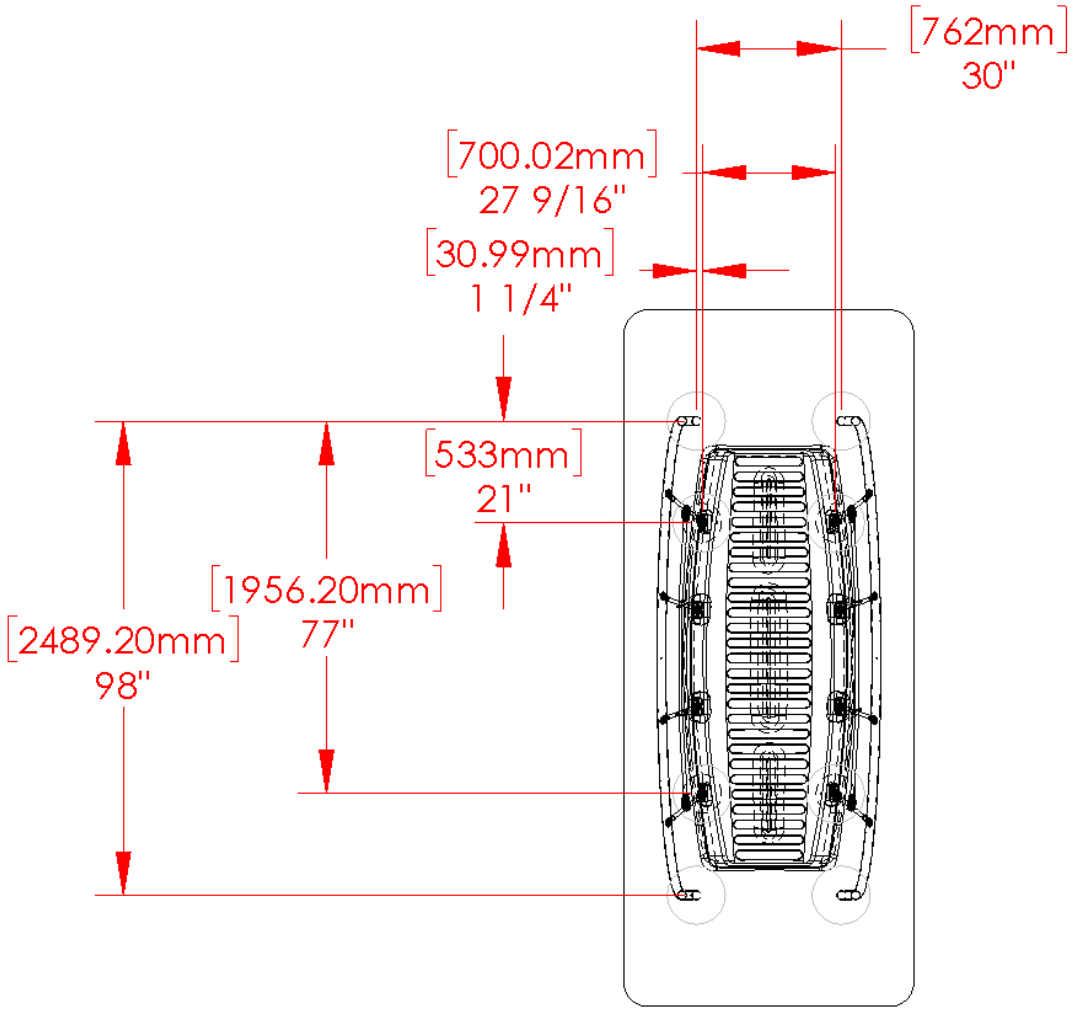

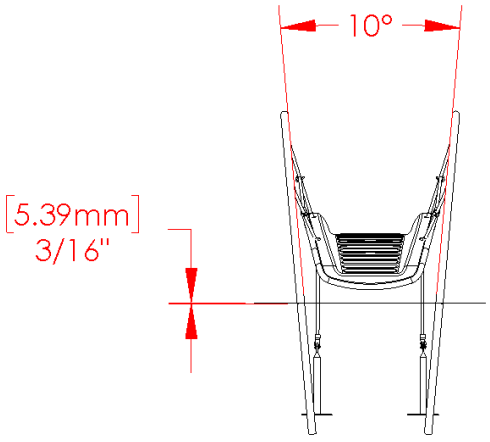

Independent

Custom Boppity Bridge

601 7TH STREET SOUTH, DELANO, MINNESOTA 55328-8605 888-574-4678 LSI Install Help 888-438-6574 LSI Direct 763-972-5200 Int. FAX (763) 972-3185

© 2016 by Landscape Structures. All rights reserved.

landscape structures®

ISO 14001 CERTIFIED

ISO 9001 Certified

SAFETY NOTE

Choose a protective surfacing material that has a Critical Height Value of at least the height of the Highest Accessible Part/Fall Height of the adjacent equipment. (Ref. *ASTM F1487*.)

DETAIL A

FOOTER ATTACHMENT

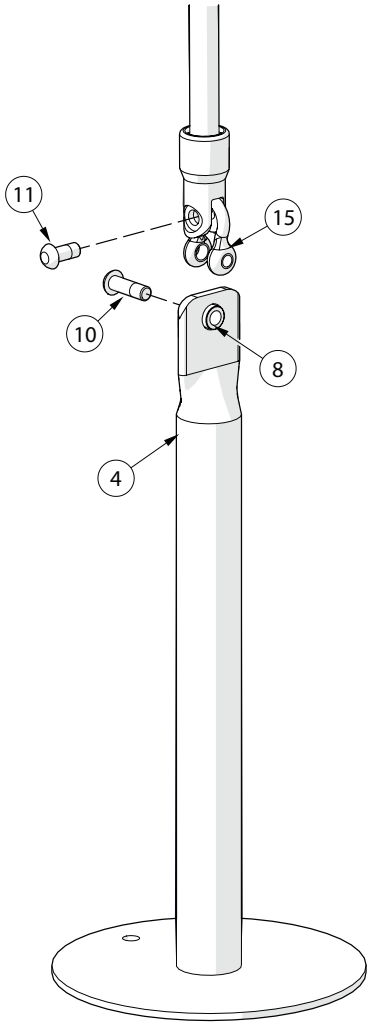

Item #	Part #	Description	Qty
4	164367	SINGLE POST FOOTER	4
8	156962	BUSH 5/8OD X 1/2 LG SST	4
10	100292	3/8 X 1-1/4 SST 6LP LTHD W/PATCH	12
11	100290	3/8 X 7/8 SST 6LP LTHD W/PATCH	16
15	138915	BOLT LINK	12

DETAIL B

CABLE TO BRDG ATTACHMENT

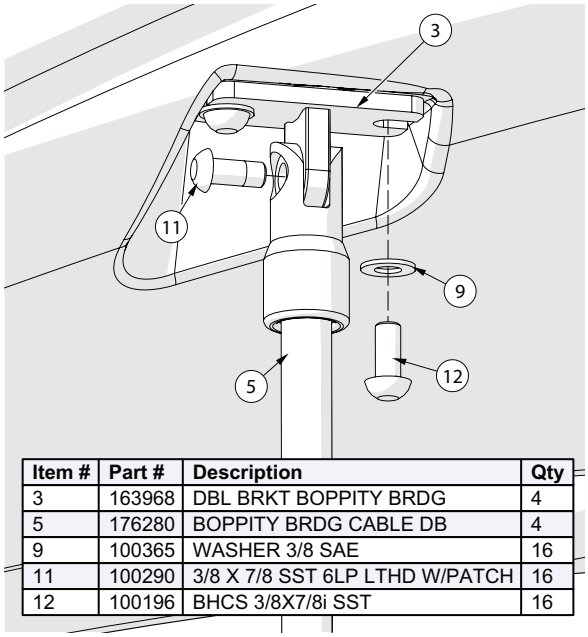

Item #	Part #	Description	Qty
3	163968	DBL BRKT BOPPITY BRDG	4
5	176280	BOPPITY BRDG CABLE DB	4
9	100365	WASHER 3/8 SAE	16
11	100290	3/8 X 7/8 SST 6LP LTHD W/PATCH	16
12	100196	BHCS 3/8X7/8i SST	16

DETAIL C

CABLE TO BRDG ATTACHMENT

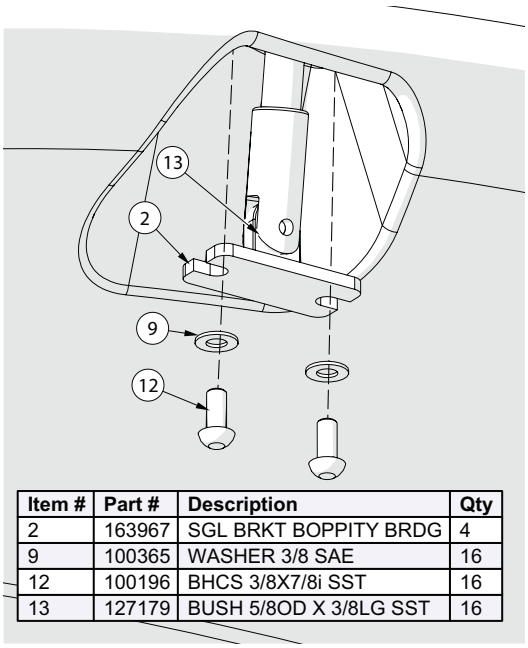

Item #	Part #	Description	Qty
2	163967	SGL BRKT BOPPITY BRDG	4
9	100365	WASHER 3/8 SAE	16
12	100196	BHCS 3/8X7/8i SST	16
13	127179	BUSH 5/8OD X 3/8LG SST	16

Independent

Custom Boppity Bridge

601 7TH STREET SOUTH, DELANO, MINNESOTA 55328-8605 888-574-4678 LSI Install Help 888-438-6574 LSI Direct 763-972-5200 Int. FAX (763) 972-3185

© 2016 by Landscape Structures. All rights reserved.

landscape structures®

ISO 14001 CERTIFIED

ISO 9001 Certified

SAFETY NOTE

Choose a protective surfacing material that has a Critical Height Value of at least the height of the Highest Accessible Part/Fall Height of the adjacent equipment. (Ref. *ASTM F1487*.)

Parts List

Item #	Part #	Description	Qty
1	163334	BOPPITY BRIDGE ROTO	1
2	163967	SGL BRKT BOPPITY BRDG	4
3	163968	DBL BRKT BOPPITY BRDG	4
4	164367	SINGLE POST FOOTER	4
5	176280	BOPPITY BRDG CABLE DB	4
6	225104	CUST INDP BOPPITY SUPPORT PNT	2
7	225137	CUST INDP BOPPITY BRIDGE NET	2
8	156962	BUSH 5/8OD X 1/2 LG SST	4

Item #	Part #	Description	Qty
9	100365	WASHER 3/8 SAE	16
10	100292	3/8 X 1-1/4 SST 6LP LTHD W/PATCH	12
11	100290	3/8 X 7/8 SST 6LP LTHD W/PATCH	16
12	100196	BHCS 3/8X7/8i SST	16
13	127179	BUSH 5/8OD X 3/8LG SST	16
14	196319	BOLT LINK SPACER	8
15	138915	BOLT LINK	12

NOTE: Use CUST HDW PKG 225139.

Installation Instructions

(Direct Bury) - Ensure post/support is plumb, pour concrete footing. Allow concrete footing to cure a minimum of 72 hours before users are allowed to play on the structure. Use 2D layout as a reference.

1) Use details and part numbers as a guide to attach components.

601 7TH STREET SOUTH, DELANO, MINNESOTA 55328-8605 888-574-4678 LSI Install Help 888-438-6574 LSI Direct 763-972-5200 Int. FAX (763) 972-3185

© 2016 by Landscape Structures. All rights reserved.