52 Powder House Blvd – Gutter replacement project

Project Summary

This application seeks approval to replace the existing wooden gutter system on the property, which is original to the structure and estimated to be over 50 years old. Due to prolonged exposure to the elements, the gutters have significantly deteriorated and are no longer functioning effectively in managing roof runoff. This past winter was an example where the gutters could not manage the snow melt, thereby creating ice dams and causing significant interior damage to the property.

The proposed work includes the careful removal of the existing wooden gutters and installation of a new gutter system designed to replicate the original appearance while providing improved functionality and durability. No changes to the roofline, fascia, or overall architectural features are proposed.

Historical Compatibility

The intent of this project is to preserve the historic character of the structure while addressing necessary infrastructure improvements. The replacement gutters will be designed to match the original wooden gutters in profile, scale, and visual appearance.

Proposed materials will be selected to closely resemble the traditional design. Visible elements, including gutter shape, downspout placement, and finish, will be consistent with the architectural style of the home and the surrounding historic district.

Where feasible, existing trim and fascia details will be preserved. If repairs are required, they will be completed in-kind to match existing materials and craftsmanship.

Materials and Installation

The following materials and methods are proposed:

Primary Material: Seamless fiberglass gutters with a traditional profile and painted finish to match existing trim (see details on material specs, provided separately)
Downspouts: Round or rectangular downspouts selected to match the historic character
Finish: Color-matched to existing fascia/trim to ensure visual continuity
Installation Method: Mounted in a manner consistent with the original system, minimizing impact to historic property

No removal or alteration of significant architectural features
Optional gutter guards may be installed if they are not visible from the public right-of-way.

Benefits and Justification

The proposed replacement is necessary to prevent ongoing water infiltration and potential damage to historic materials, including siding, trim, and foundation elements. The new system will:

- Provide effective water management to protect the structure
- Reduce the risk of rot and deterioration of historic fabric
- Maintain the building's historic appearance through careful design and material selection
- Ensure long-term sustainability with minimal visual impact

The project represents a like-for-like replacement in appearance, with upgraded materials chosen for longevity and reduced maintenance.

Conclusion

This proposal respectfully balances preservation and practicality by replacing a failing gutter system with one that is visually consistent with the historic character of the property. The work will not alter defining architectural features and will ensure the continued protection and integrity of the structure. Approval of this application will support the ongoing stewardship of the property in accordance with historic district guidelines.

07 71 23 – Manufactured Gutters and Downspouts

Duragutter

22 Candy Hill Rd
Sudbury, MA 01776
781-259-1221 or info@duragutter.com
duragutter.com

Extruded Aluminum Gutter Specification

PART 1 — GENERAL

1.1 SUMMARY

A. Section includes: Duragutter extruded aluminum gutter system with profiles, concealed connector pins, joint tape kits, end closures/plugs, outlets, optional leaf guards, and optional integral flashing.

B. Reference information for design and installation is available on the manufacturer's website:

1. **Installation Page** with profile-specific guides and videos.
2. **Planning & Installation Guide** (system overview; lengths; finishes; accessories).
3. **Profile pages** (Traditional and Modern profiles).
4. **CAD/PDF drawings** for each profile.

1.2 SUBMITTALS

A. Product Data: Manufacturer's Planning & Installation Guide showing chosen profiles, standard lengths, finishes, and required parts.
B. Shop Information: Layout of gutter runs, outlets, end conditions, and needed accessories.
C. Drawings: Provide applicable CAD/PDF profile details.
D. Installation Information: Confirm installer has access to profile-specific Installation Guide(s) and videos.

1.3 QUALITY ASSURANCE

A. Basis of Design: Duragutter, Reinvent LLC. Website: duragutter.com.
B. Installer: Must review the manufacturer's Planning Guide and Installation Guide(s) and videos before commencing work.

1.4 DELIVERY, STORAGE, AND HANDLING

A. Deliver in original packaging. Store dry, supported, and protected from damage. All sealants and adhesives must be protected from freezing. If using fork lift or telehandler, pad forks to avoid damaging finished surfaces of gutters. Do not slide gutters against each other or other materials.

PART 2 — PRODUCTS

2.1 MANUFACTURER

A. Duragutter (Reinvent LLC), as described on duragutter.com.

2.2 SYSTEM DESCRIPTION

A. Extruded aluminum gutter system with concealed aluminum connector pins, pre-cut butyl joint tape kits, adhesive/sealant, stainless screws, outlets, end caps, internal plugs, and optional accessories.
B. Profiles:

1. Traditional: OG-5, OG-6, FB, GR.
2. Modern: SQ, TL, TR, WG, KE.

2.3 MATERIALS & ACCESSORIES

A. Stock Lengths:

1. 25′: OG-5, OG-6, FB, SQ, TR, GR.
2. 24′-6″: WG, KE, TL.
3. Longest powder-coated length: 29′; longer lengths available by inquiry.

B. Connector Pins: Aluminum pins, glued into internal grooves (straight, angled, or flexible wire for special angles).

C. Joint Tape: Pre-cut butyl kits.

D. Adhesive: 2P-10 with activator.
E. Sealant: Dicor sealant used in fastener holes, end caps, plugs, and at joints.
F. End Caps: ⅛″ aluminum with countersunk holes.
G. Internal Plugs: PVC plugs in profile-specific shapes.

H. Fasteners: 3″ stainless screws with rubber washers.
I. Leaf Guards (Optional): Snap-in PVC or stainless micro-mesh.
J. Integral Flashing (Optional): Pre-bent flashing locking into gutter groove; stocked in black/white; Drexel Metals colors available; 10′ lengths.

2.4 FINISH

A. Powder Coat: IFS super durable polyester powder finish. Manufacturer states it meets/exceeds AAMA 2604. Stocked in white and/or black, with custom colors available. Gutters may also be field painted per Duragutter instructions.

PART 3 — EXECUTION

3.1 EXAMINATION

A. Verify fascia/sub-fascia condition, layout, and any build-out. Mark rafter locations if applicable.

B. Coordinate with roofing and flashing work.

3.2 PREPARATION

A. Create a cut plan and joint layout before installation.

3.3 INSTALLATION

A. Install complete system according to manufacturer's **profile-specific Installation Guides and videos** on the Duragutter website.
B. Use only accessories and methods described in the Planning & Installation Guides.

3.4 CLEANING AND PROTECTION

A. If necessary, clean exposed surfaces with mild detergent and rinse with clean water. Installer may protect finish with optional protective film until the project is complete.

Duragutter: Trusted & Approved by Historic District Commissions

Period-Correct Details That Matter

Duragutter has been extensively vetted and approved for use in historic preservation projects across Massachusetts. Many Historic District Commissions (HDCs) have recognized Duragutter as a historically accurate, durable, and architecturally appropriate solution for properties requiring period-correct details. Our gutters have been featured in numerous historic restoration projects and have been successfully integrated into homes and buildings listed on the National Register of Historic Places.



HDC Approved & Installed

Duragutter has been officially approved and installed in historic districts across Massachusetts, including:

- Cambridge Historic Districts – Used in multiple restoration projects for architecturally significant homes.
- Salem Historic District – Approved for use in preserving the historic charm of 18th and 19th-century properties.
- Wellesley Historic District – Chosen as the premium solution for homes requiring historically accurate gutter profiles.
- Concord Historic District – A trusted product for properties that demand precise historic replication.
- Plymouth's Mayflower Society House – Installed as part of a high-profile historic preservation effort.

Beyond these locations, Duragutter has also been implemented in other historically significant areas across New England and beyond, ensuring that historic properties maintain their original character without sacrificing durability or performance.





Why HDCs Recommend Duragutter

Many HDCs, architects, and preservationists struggle to find gutters that match historic profiles while meeting modern durability standards.

Traditional solutions, such as wood gutters or copper half-rounds, often come with high costs and maintenance concerns. Duragutter solves this problem by offering:

- Historically Accurate Profiles – Replicates original wood gutter designs for seamless integration.
- Premium Durability – Made from 1/8” T5 extruded aluminum, resistant to weather and impact.
- Customizable Aesthetics – Powder-coated white for lifelong durability but can be painted any color.
- Ease of Installation – Designed for contractors and roofers, reducing labor and installation time.

By choosing Duragutter, HDCs can confidently recommend a time-tested solution that preserves history while enhancing structural longevity.



Trusted by the National Register of Historic Places

In addition to being approved by local HDCs, Duragutter has been successfully installed on multiple properties listed on the National Register of Historic Places. This means our product has met strict historic preservation standards, ensuring that the architectural integrity of each structure is maintained while improving functionality and longevity.

Duragutter was also featured on PBS' "This Old House", a trusted source for high-quality restoration projects, further cementing its reputation as the best-in-class gutter system for historic properties.



A Trusted Resource for Historic District Commissions

As an HDC-approved product, we want to ensure commissions have all the information they need to recommend Duragutter for upcoming projects. We are happy to provide:

- Technical Specifications – Detailed product breakdowns for commission review.
- Sample Materials – Physical samples for side-by-side comparisons with original wood gutters.
- Consultation & Support – Direct collaboration with HDCs, architects, and preservationists.

If your commission would be interested in learning more, contact us today to discuss how Duragutter can be a valuable resource for your historic preservation efforts.

📞 Phone: 781-259-1221
📧 Email: info@duragutter.com

How a Duragutter is Made

Duragutter is made in a factory and is ten times thicker and stronger than roll-formed gutters. This video shows how aluminum “logs” are heated and pushed through a die (extruded) under enormous pressure to create the gutter. They are then straightened and powder coated, creating the strongest and most durable gutter in the world.

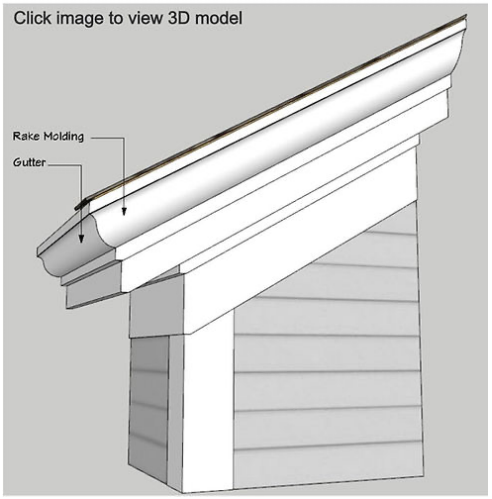

A Clean, Modern Look

Duragutter's modern gutter profiles provide a blank slate for your design creativity. They can be used as a bold details or as completely concealed box gutters. The Wedge and Knife Edge profiles provide a dramatic accent to any modern design.

Prevents Ice Dams

Typical gutters can actually cause leaks inside the house from ice dams. Ice dams form when snow on the roof and in the gutter freezes. Heat loss from inside the house melts the ice on the roof, but not the ice in the gutter, which extends beyond the heated area. The melted ice water on the roof cannot flow off the roof because of the ice dam in the gutter, so it flows backward up the roof until it finds its way inside the house.

Duragutter has a channel on the top backside that a piece of metal flashing locks into. This flashing extends up the fascia and under the roofing. This creates a waterproof barrier that prevents water from entering the house.

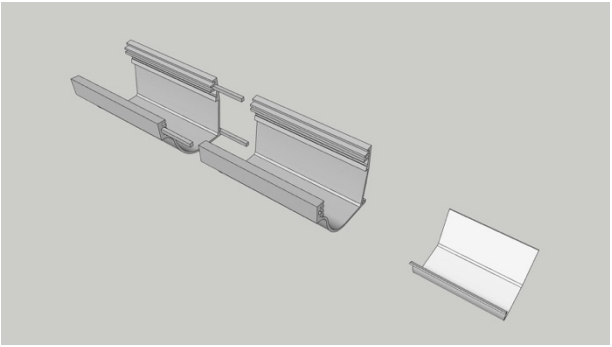

We Help You Get It Right

Whether traditional or modern, getting the details right can be hard. To make it easier, we have created 3D models that illustrate construction details using our gutter profiles. Browse our modern and traditional profile pages and select a profile to view 3D details.

In addition, you can download .pdf and .dwg files showing the exact construction details, and our 3-part specification. You can even print out full size drawings to use as templates.


FIBERGUTTER®
V4.8
www.fibergutter.com

FiberGutter Introduction





FiberGutter: The Industry Leader in Gutter Solutions

FiberGutter is a premier manufacturer, distributor, and installer of high-performance fiberglass gutter systems for residential, municipal, and commercial projects.

Our mission is to provide a long-lasting, high-functioning, and sustainable rain gutter solution that outperforms all other products on the market.

Backed by nearly a century of combined experience in the marine and construction industries, FiberGutter is engineered for unmatched durability and performance. With state-of-the-art manufacturing facilities in Pennsylvania and Massachusetts, we ensure precision, consistency, and superior quality in every product we produce.

While we can't predict the future, one thing remains certain—when a product carries the FiberGutter name, it represents unparalleled quality, cutting-edge innovation, and exceptional performance.





FiberGutter®
546 Plymouth St
Halifax, MA 02338
Office: (781) 754-0118
www.fibergutter.com

FIBERGUTTER®

Fibergutter® is a registered trademark of Fiberglass Building Products Inc

About FiberGutter





FiberGutter: The Ultimate Gutter Solution

What is FiberGutter?

FiberGutter is an advanced fiberglass gutter system engineered using high-performance polyester resin and manufactured through a precision pultrusion process. Years of research and development have resulted in a product that is smoother, more consistent, more durable, and more cost-effective than traditional hand-fabricated fiberglass gutters.

Why Choose FiberGutter?

- Aesthetic Appeal – Designed to replicate the classic look of traditional wood gutters.
- High Capacity – Comparable to other materials in water-carrying efficiency.
- Low Maintenance – Requires minimal upkeep beyond routine cleaning, with optional cover solutions available.
- Unmatched Strength – The strongest gutter system available, ensuring long-term durability.

Exceptional Longevity – Backed by a 50-year warranty, delivering long-term peace of mind.

Where to Buy FiberGutter

FiberGutter is available through a nationwide dealer network and can also be purchased directly by contractors and homeowners outside of dealer coverage areas. We ship throughout the United States, Canada, and the Caribbean and offer a network of approved installers who have been professionally trained in the complete installation process.

For more information, contact us today!

FiberGutter®
546 Plymouth St
Halifax, MA 02338
Office: (781) 754-0118
www.fibergutter.com

FIBERGUTTER®

Fibergutter® is a registered trademark of Fiberglass Building Products Inc

FiberGutter Profiles

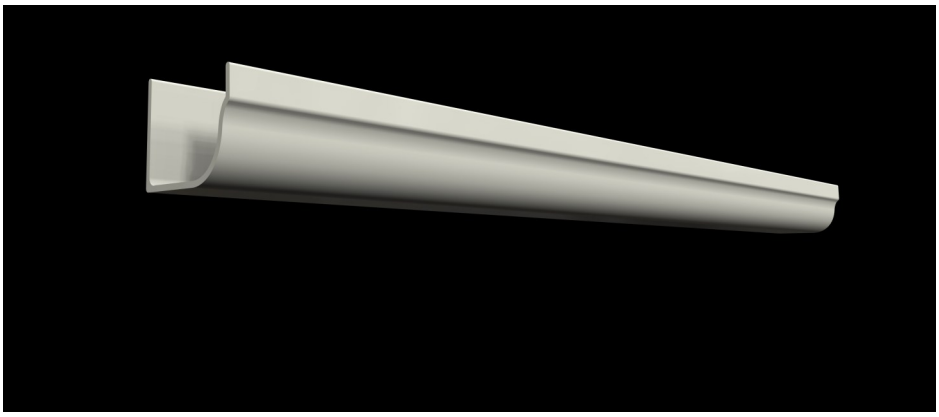



Part: FG60

4X5 Fiberglass Gutter

FG6016 – 16′ Length
FG6024 – 24′ Length
FG6040 – 40′ Length

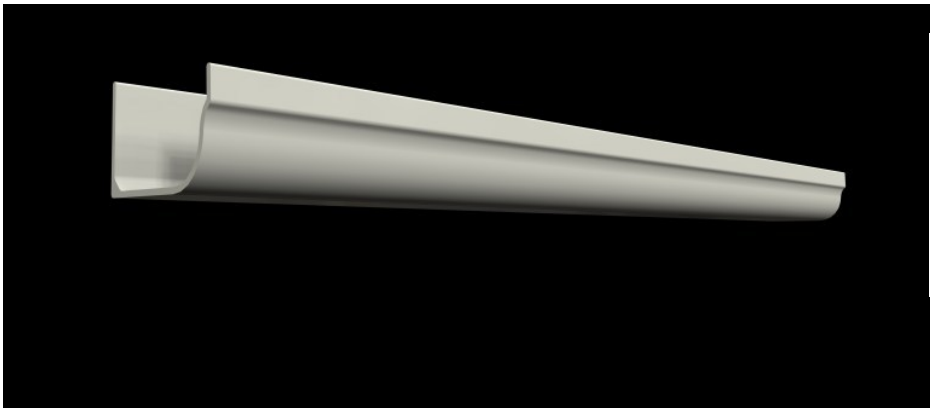



Part: FG90

4X6 Fiberglass Gutter

FG9016 – 16′ Length
FG9024 – 24′ Length
FG9040 – 40′ Length

FiberGutter®
546 Plymouth St
Halifax, MA 02338
Office: (781) 754-0118
www.fibergutter.com

FIBERGUTTER®

Fibergutter® is a registered trademark of Fiberglass Building Products Inc