30-Inch Wide Single Wall Oven

MEW9530F

Fingerprint Resistant Stainless Steel
MEW9530FZ

Also available in:

White	**MEW9530FW**
Black	**MEW9530FB**

Capacity

Oven	5.0 cu. ft.

General Features & Properties

Heavy-Duty Roll-Out Racks
FIT System
2x Life Heavy Duty Door Hinges
Variable Broil
10 Year Limited Parts Warranty*
Designed, Engineered, and Assembled in the U.S.A.

Electrical Details

Amps	20
Volts	240

Certifications

ADA Compliant	Yes

Technical Details

Fuel Type	Electric
Oven Type	Single
Oven Cooking System	Convection
Number of Oven Racks	3
Cleaning Type	Adjustable Self-Cleaning

Dimensions

Product Dimensions (H x W x D)	28-3/4" x 30" x 26-7/8"
Depth with Door Open 90°	45-1/2"
Cutout Dimensions (H x W x D)	28" x 28-1/2" x 24"

Reference Material

Dimension Guide

Install Guide

Use & Care Guide

Warranty

Key Features & Benefits

Power Preheat
Power Preheat lets you enjoy dinner faster with juicy flavor every time.

True Convection With Fan & Third Element
True convection uses a powerful third heating element and a sturdy fan to circulate even temperatures for more consistent roasting and baking.

Precision Cooking™ System
The Precision Cooking™ system combines Precise Preheat, Precise Bake and Precise Broil functions to deliver quick, evenly cooked meals in your oven.

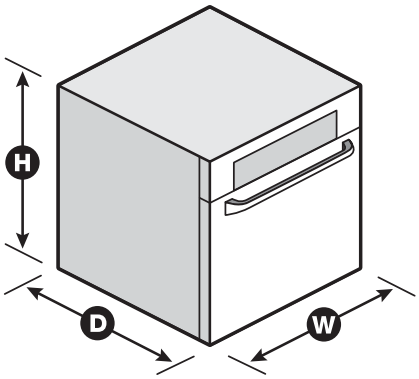

*Visit maytag.com for warranty details. NOTE: Dimensions are for planning purposes only. For complete details, see Installation Instructions packed with product. Specifications subject to change without notice.

®/™ © 2020. All rights reserved. Printed in the U.S.A. D200104XXE. MEW9530FSpecSheetV01.