FOUR DOOR FRENCH DOOR REFRIGERATOR

MODELS:

WRX986SIHV02 (Black Stainless)
WRX986SIHZ02 (Stainless Steel)

04/19/2021
© 2021 Whirlpool Corporation
Part No. W11479731 Rev. B

CABINET PARTS

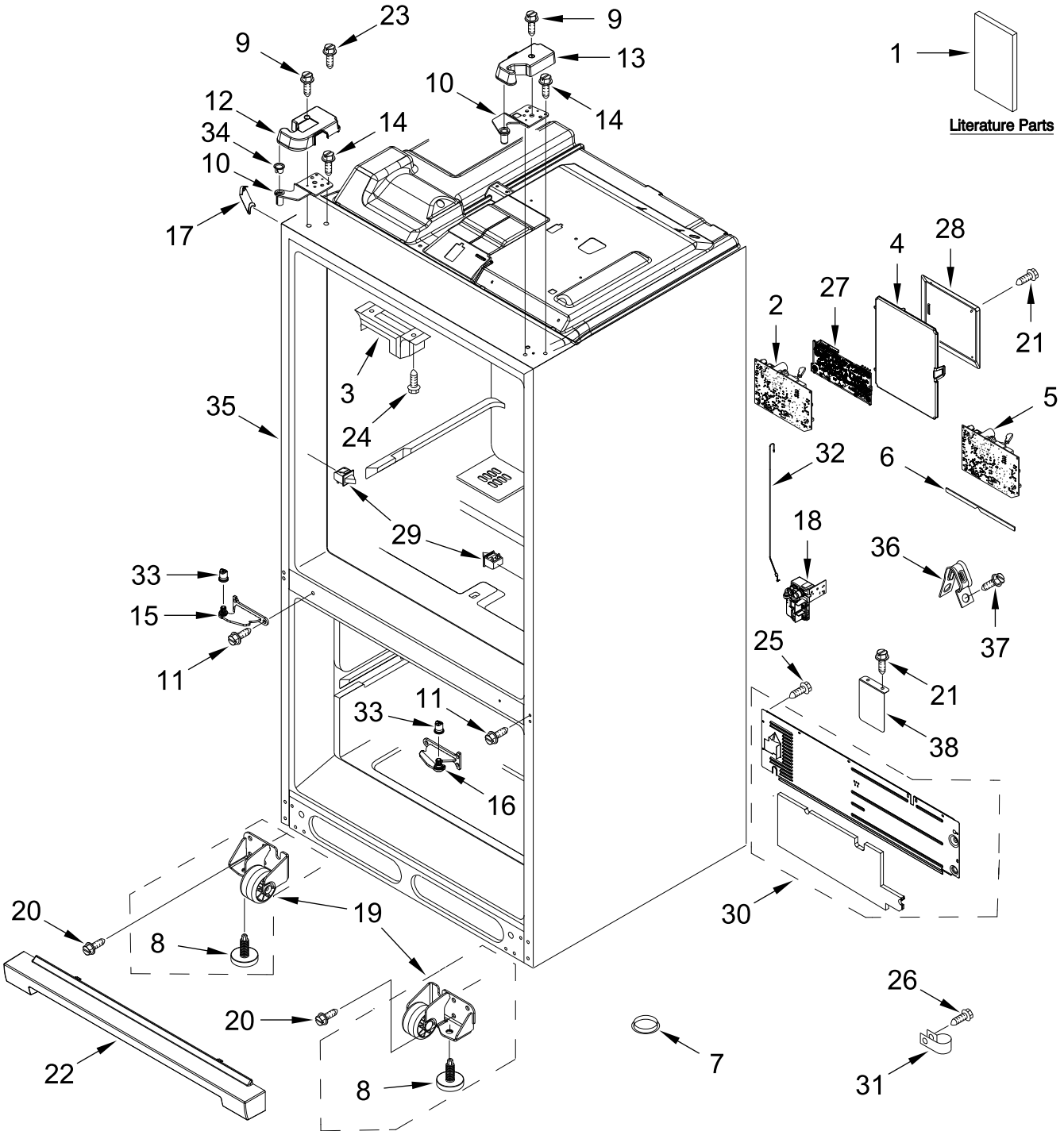

CABINET PARTS

Illus. No.	Part No.	Description
1		Literature Parts
		Tech Sheet
	W11431939	English
	W11431941	French
	W11407638	Use and Care Guide
	W11113341	Energy Guide
2	W10665178	Supply, Power
3	W10344432	Block, Pivot
4	W10277839	Lid, HV
5	W10811364	Board, Control
6	W10415341	Gasket, HV Box
7	A3076901	Plug, Button
8	W10141622	Brake, Roller
9	12992602	Screw
10		Hinge, Top
	W10248410	Left Hand
	W10248409	Right Hand
11	W10673842	Screw (Black)
	W10673840	Screw (Stainless)
12		Cover, Top Hinge
		Left Hand
		(Includes Foil)
	W10471617	Black
	W10471618	Grey
13		Cover, Top Hinge
		Right Hand
	W10407157	Black
	W10407158	Grey
14	W10731474	Screw
15		Hinge, Center
		Left Hand
	W10248705	Black
	W10407280	Grey
16		Hinge, Center
		Right Hand
	W10248702	Black
	W10407276	Grey
17		Cover, Corner
	12587703B	Black
	12587703AP	Grey
18	W11460084	Valve, Water
19		Assembly, Roller
	W10515763	Left Hand
	W10515762	Right Hand
20	W10709365	Screw
21	12990702	Screw
22		Grille, Toe
	W10637669	Black
	W10637671	Grey
23	12992601	Screw
24	12990302	Screw
25	W10141645	Screw
26	12990511	Screw
27	W10790783	Supply, LED Power
28	W10754591	Cover, HV Control Box
29	W10847849	Switch, Light
30	W11364644	Assembly, Unit Cover
31	M0108107	Clamp, Tube
32	W11296599	Tube, Water
33	W10505294	Coupler, Door
34	W10212137	Retainer, Door
35		Cabinet (Not a Servicable Part)
36	549193	Clamp, Power Cord
37	W10141645	Screw
38	W10336736	Cover, Roller

REFRIGERATOR LINER PARTS

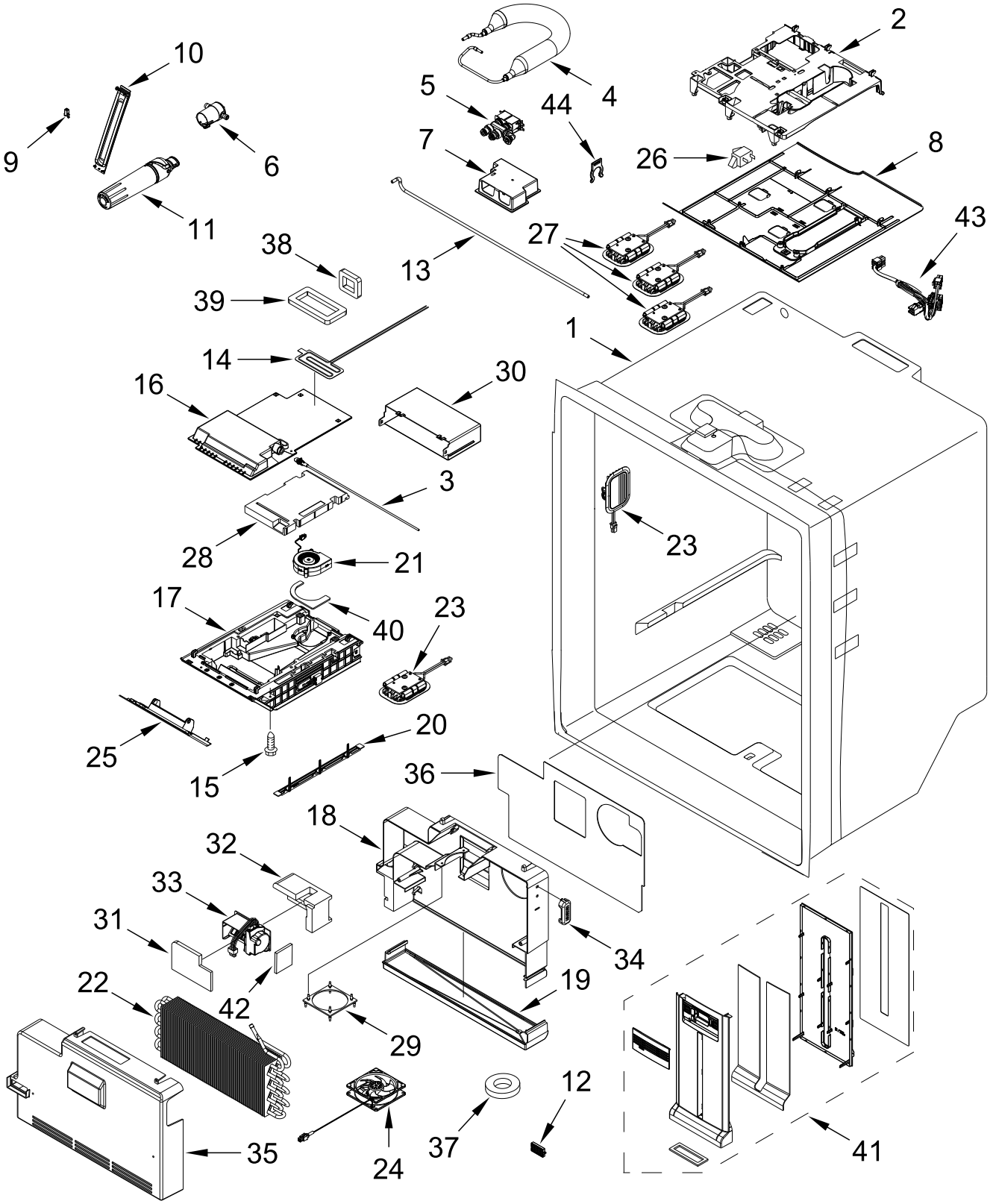

REFRIGERATOR LINER PARTS

Illus. No.	Part No.	Description
1		Liner (Not A Serviceable Part)
2	W11281629	Housing, Water System
3	W11306460	Tube, Fill
4	W11296598	Reservoir, Water (Also Order Wire Tie Part 8567668)
5	W11255718	Valve, Dual Water
6	W11293954	Housing, Water Filter
7	W11391457	Enclosure, Water Valve
8	W10669663	Cover, Waterbox
9	2223877	Latch, Push
10	W10277949	Door, Filter Access
11	W10680605	Filter, Water
12	W10315189	Filter, Air
13	W11306462	Waterline, Valve to Hinge
14	W10706850	Heater, Fill Tube
15	12990518	Screw
16	W10598013	Cover, Icebox
17	W11374557	Assembly, Icebox (Foamed)
18	W11392044	Enclosure, Evaporator
19	W11392043	Pan, Drain
20	W10505516	Trim, Icebox
21	W10833801	Fan, Icebox
22	W11349784	Assembly, Evaporator
23	W11228040	Assembly, LED Light Module
24	W10799016	Motor, Evaporator Fan (Includes Wire Harness)
25	W10553630	Assembly, Fascia (Includes Heater)
26	W10847853	Switch, Light
27	W11234027	Harness, LED Wire (Includes LED lights)
28	W10280983	Insulation
29	W10389152	Support, Fan
30	W10635022	Adapter, Icebox
31	W10503491	Retainer, Damper
32	W10503492	Support, Damper
33	W10248595	Damper, Electronic Control
34	W10438957	Cover, Thermistor
35	W10503500	Cover, Evaporator
36	W11359132	Gasket, Evaporator Enclosure
37	W11359131	Gasket, Drain Tube
38	W10320706	Gasket, Rear Return
39	W10280988	Gasket, Rear Supply
40	W10392172	Gasket, Fan
41	W11130608	Assembly, Air Tower
42	W10470981	Gasket, Damper
43	W11369503	Wire Assembly, Jumper
44	W11175631	Locking Ring (5/16)
		FOLLOWING PARTS NOT ILLUSTRATED
	W11306925	Harness, Dual Valve
	W11298842	Wire Assembly, Ice Box

FREEZER LINER PARTS

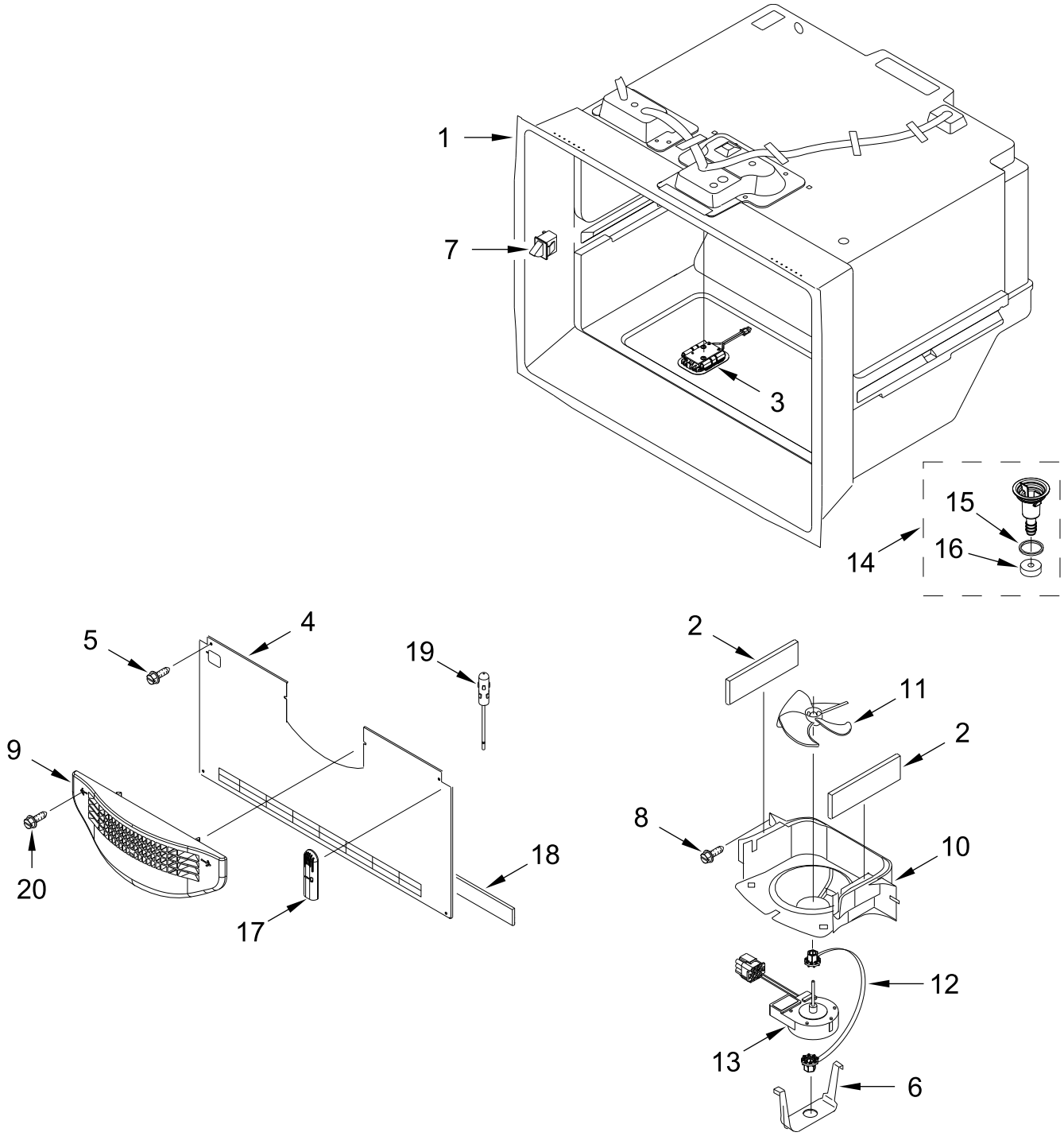

FREEZER LINER PARTS

Illus. No.	Part No.	Description
1		Liner (Not A Seviceable Part)
2	A3189392	Gasket, Foam
3	W11228040	Assembly, LED Light Module
4	W11282987	Cover, Evaporator (Freezer)
5	12990511	Screw
6	12956601	Clip, Fan Motor
7	W10847853	Switch, Light
8	12990504	Screw
9	W10496613	Grille, Air (Freezer)
10	W10363507	Shroud, Evaporator Fan
11	12986101	Blade, Fan
12	12951101	Grommet, Fan Motor
13	W11374554	Motor, Evaporator (Includes Harness, Thermistor, and Defrost Thermostat)
14	W10503218	Assembly, Drain Funnel
15	M0500703	Seal
16	B8381501	Gasket, Drain
17	W10405166	Cover, Thermistor
18	W10531268	Gasket, Dual Evaporator
19	W10280385	Thermistor
20	8281136	Screw

REFRIGERATOR DOOR PARTS

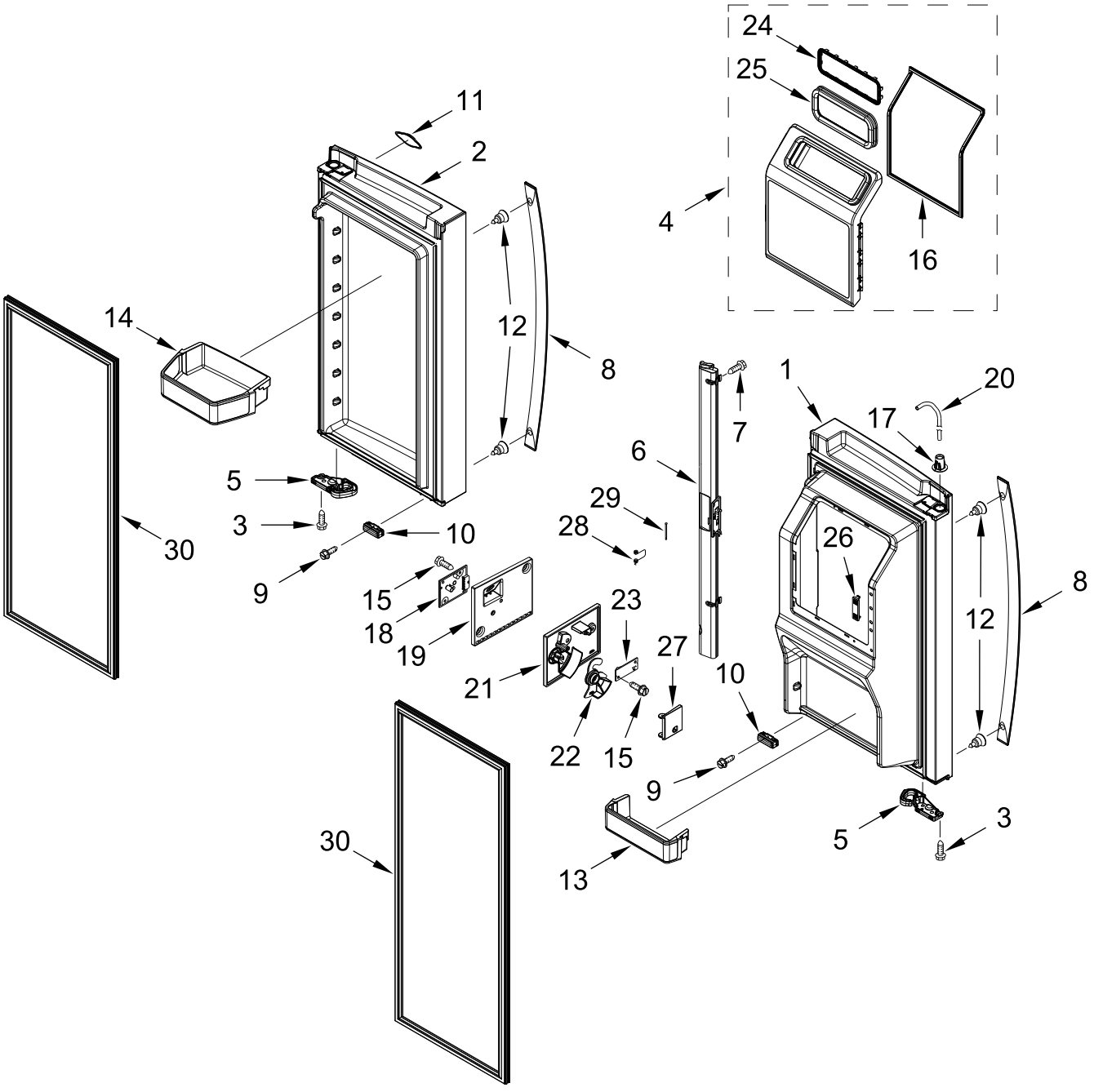

REFRIGERATOR DOOR PARTS

Illus. No.	Part No.	Description
1		Door, Refrigerator
		Left Hand
		(Includes Door Gasket)
	W11405227	Black Stainless
	W11405229	Stainless
2		Door, Refrigerator
		Right Hand
	W11024122	Black Stainless
	W11419958	Stainless
3	W10238319	Screw
4	W11261139	Door, Ice
5		Latch, Door
	W10712952	Left Hand
	W10712953	Right Hand
6		Mullion, Door
	W10698203	Black
	W10698204	Grey
7	12990204	Screw
8		Handle, Door
	W10918272	Black Stainless
	W11115757	Stainless
9	12990504	Screw
10		Bumper, Door
	W10407187	Black
	W10407188	Grey
11	W10884773	Badge
12	W11328753	Screw
13	W10533404	Trivet, 2 Liter
14	W10674770	Bucket, Gallon
15	489214	Screw
16	W10347085	Gasket, Ice Compartment Door
17	W11315302	Clip, Tube
18	W10518658	Board, Receiver Circuit
19	W10258510	Cover, Receiver
20	W10499015	Tube, Water
21	W10258502	Cover, Emitter
22	W10258540	Slide, Icemaker Shut Off
23	W10832970	Board, Emitter Circuit
24	W10400825	Retainer, Ice Chute
25	W11261136	Gasket, Ice Chute
26	W10646855	Vent, Thermistor
27	W10258520	Door, Emitter
28	2198635	Spring, Door
29	2198634	Pin, Door
30		Gasket, Door
	W10873942	Black
	W10873941	Grey

FREEZER DOOR PARTS

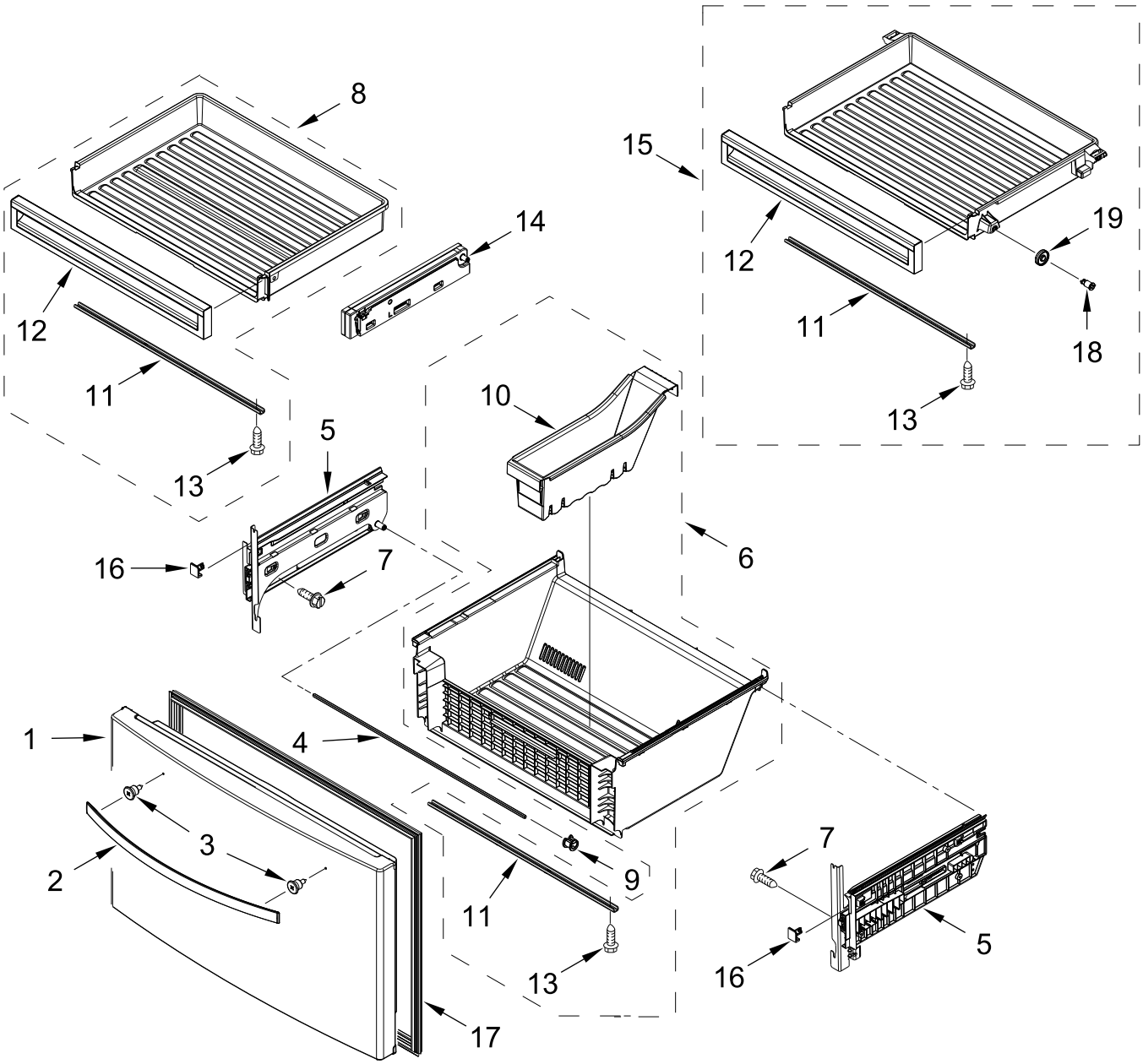

FREEZER DOOR PARTS

Illus. No.	Part No.	Description
1		Door, Freezer (Includes Door Gasket)
	W11024129	Black Stainless
	W11419943	Stainless
2		Handle, Door
	W11101977	Black Stainless
	W11115761	Stainless
3	W11328753	Screw
4	W10503522	Shaft
5		Assembly, Bracket
	W10795770	Left Hand
	W10795768	Right Hand
6	W10650427	Bin, Lower
7	12990518	Screw
8	W10493169	Bin, Upper
9	W10709748	Clip, Shaft
10	W10507444	Divider, Lower
11	W10469177	Support, Pan
12	W10488124	Front, Freezer Pan
13	489443	Screw (Stainless)
14		Adapter, Upper Pan
	W10619219	Left Hand
	W10619218	Right Hand
15	W10704091	Assembly, Center Pan
16		Stop, Pan
	W10485096	Left Hand
	W10485089	Right Hand
17		Gasket, Door
	W10248748	Black
	W10248749	Grey
18	W10643690	Axle, Roller
19	W10248555	Roller, Pan

UNIT PARTS

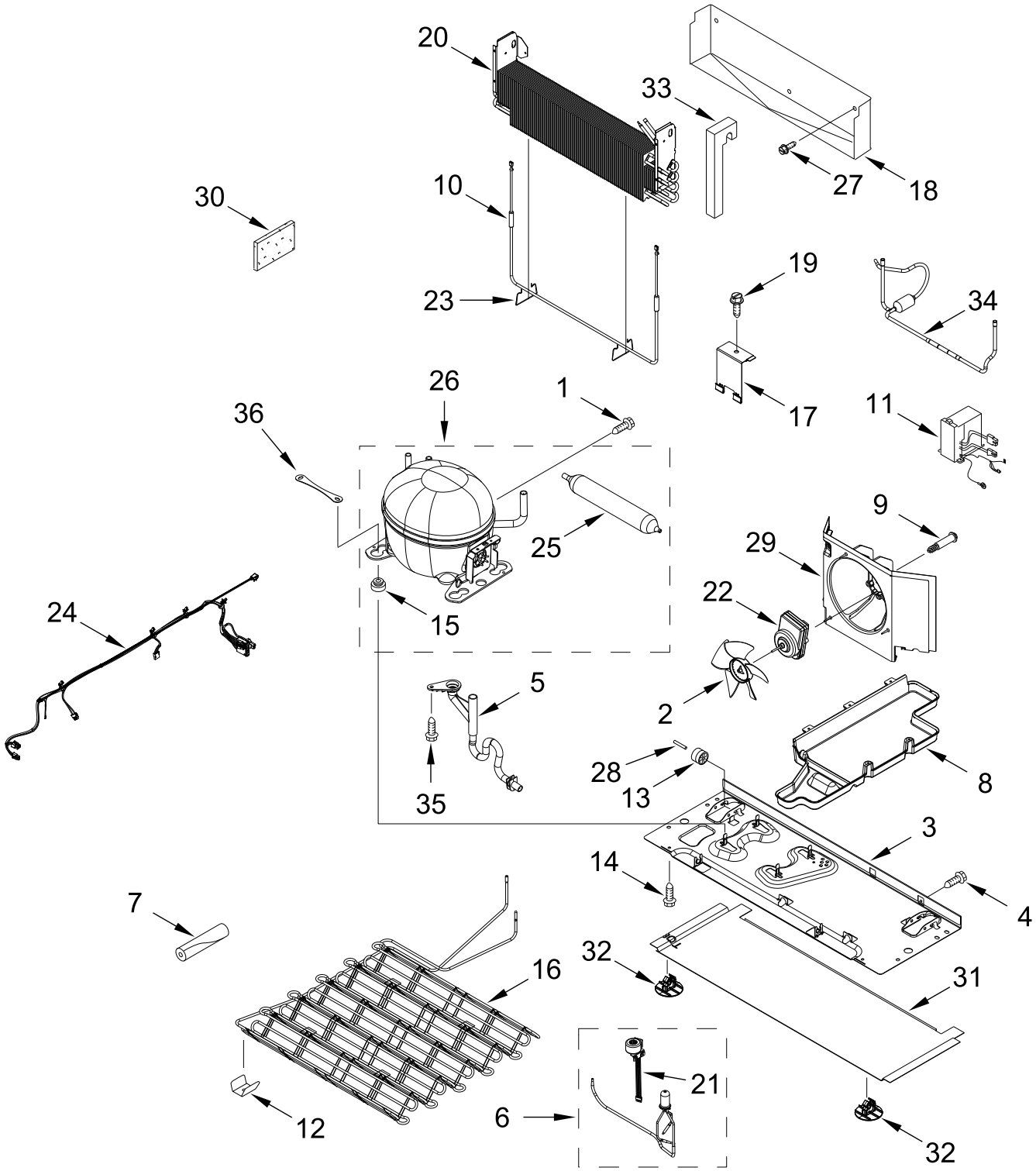
20
33
27
18
10
30
19
34
23
17
26
1
36
11
25
9
29
22
24
15
5
2
28
8
13
35
3
14
4
7
16
32
31
21
6
12
32

UNIT PARTS

Illus. No.	Part No.	Description
1	W10141625	Screw
2	2188935	Blade, Fan
3	W10570074	Baseplate
4	12990511	Screw
5	W10776916	Extension, Drain
6	W10709322	Assembly, 3 Way Valve Coil
7	W10303521	Sleeve
8	W10660727	Tray, Evaporator
9	W10622701	Screw
10	12729128	Heater, Defrost
11	W10710090	Assembly, Inverter Box
12	W10248621	Clip, Condenser
13	12477102	Roller
14	12992101	Screw
15	10835903	Grommet
16	W10559262	Condenser
17	W10391376	Bracket, Valve
18	W10342573	Tray, Drip
19	W10141645	Screw
20	W10248589	Assembly, Evaporator
21	W10709318	Coil, 3 Way Valve
22	W10909387	Motor, Condenser Fan
23	10428101	Clip, Heater
24	W11306946	Harness, Unit (Includes Power Cord)
25	W10286069	Drier
26	W10756020	Compressor
27	W10142294	Screw
28	12477202	Axle, Roller
29	W10406719	Shroud
30	2169104	Insulation, Sound Deadening
31	W10278140	Cover, Condenser (Bottom)
32	W10815861	Clip, Bottom Cover
33	W10491355	Gasket, Airdam
34	W10626970	Assembly, Suction Tube
35	W10141518	Screw
36	W10236396	Strap, Compressor
		FOLLOWING PARTS NOT ILLUSTRATED
	978025	Valve, Access (1/4")
	978026	Valve, Access (5/16")
	978027	Valve, Access (3/8")
	978029	Valve, Access (5/8")
	978030	Valve, Access (3/4")
	876764	Valve, Access (3/16")
		REFRIGERANT CHARGE
		5.50 oz. (R-134A)

SHELF PARTS

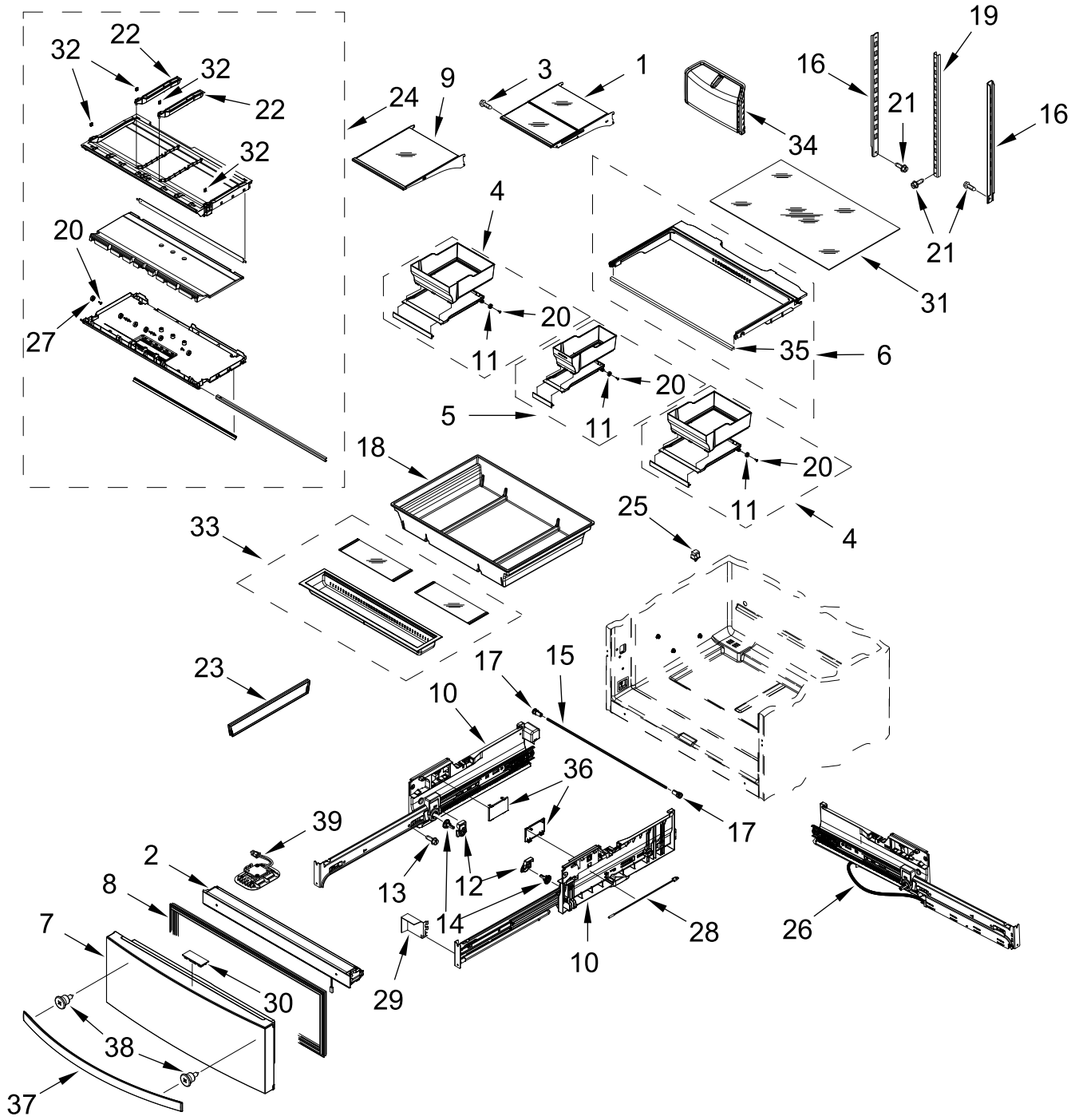

32
22
32
22
32
20
27
24
9
3
1
34
16
19
21
16
21
4
20
11
31
35
6
20
5
11
20
11
4
18
33
25
23
17
15
10
36
17
39
2
8
7
13
12
14
28
26
10
29
30
38
37

SHELF PARTS

Illus. No.	Part No.	Description
1	W10709175	Assembly, Tuck Shelf
2	W11374494	Assembly, Secondary Mullion
3	W10421495	Screw
4	W10509272	Crisper, Medium
5	W10509275	Crisper, Small
6	W11037029	Assembly, Crisper Cover
7		Door, Pantry
		(Includes Door Gasket)
	W11024162	Black Stainless
	W11419982	Stainless
8		Gasket, Pantry
	W10545600	Black
	W10518365	Grey
9	W10709163	Assembly, Shelf
10		Adapter, Pantry
	W11215629	Left Hand
	W11093718	Right Hand
11	W10530295	Roller
12		Cover, Gear
	W10284709	Left Hand
	W10294414	Right Hand
13	12991702	Screw
14	W10277360	Gear, Spur
15	W10802341	Shaft, Rack
16	W10372170	Ladder, Side
17	W10277361	Collar, Gear
18	W10530656	Pan, Pantry
19	W10248516	Ladder, Center
20	12991401	Screw
21	W10423560	Screw
22	W10530296	Guide, Crisper
23	W10772797	Divider, Large Pantry
24	W10782690	Assembly, Floor (Includes Heater)
25	W10847853	Switch, Light
26	W10512203	Harness, Side Adapter
27	W10530295	Roller
28	W10549991	Thermistor
29	W10518378	Cover, Connector
30		Assembly, User Interface
	W10599145	Black
	W10503833	Stainless
31	W10893770	Glass, Crisper
32	12702901	Pad, Glide
33	W10780178	Bin, Secondary Mullion
34	W10826105	Assembly, Produce Preserver
35	W10530297	Support, Crisper Front
36	W10518036	Cover, Side Adapter
37		Handle, Door
	W11101977	Black Stainless
	W11115761	Stainless
38	W11328753	Screw
39	W11228040	Assembly, LED Light Module

DISPENSER FRONT PARTS

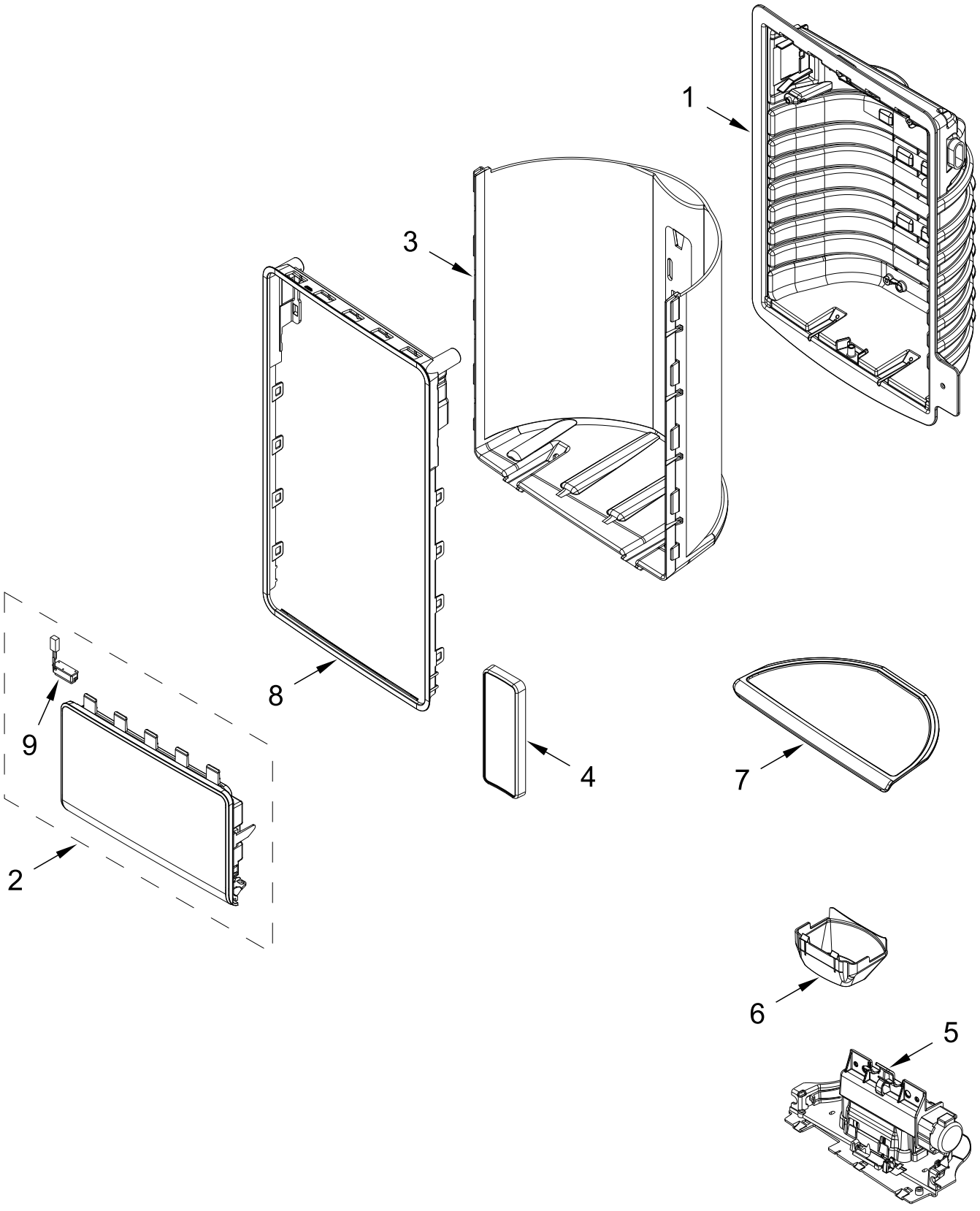

DISPENSER FRONT PARTS

Illus. No.	Part No.	Description
1		Housing, Dispenser (Not Serviced)
2		Assembly, User Interface
	W11114483	Silver
3		Wall, Dispenser False
	W10819058	Grey
4		Assembly, Pad
	W10473007	Grey
5	W10577864	Assembly, Seperator
6	W10435760	Guide, Ice
7		Tray, Drip
	W10819059	Grey
8		Ring, Trim
	W10402180	Chrome
9	W10470750	Assembly, LED

ICEMAKER AND ICE CONTAINER PARTS

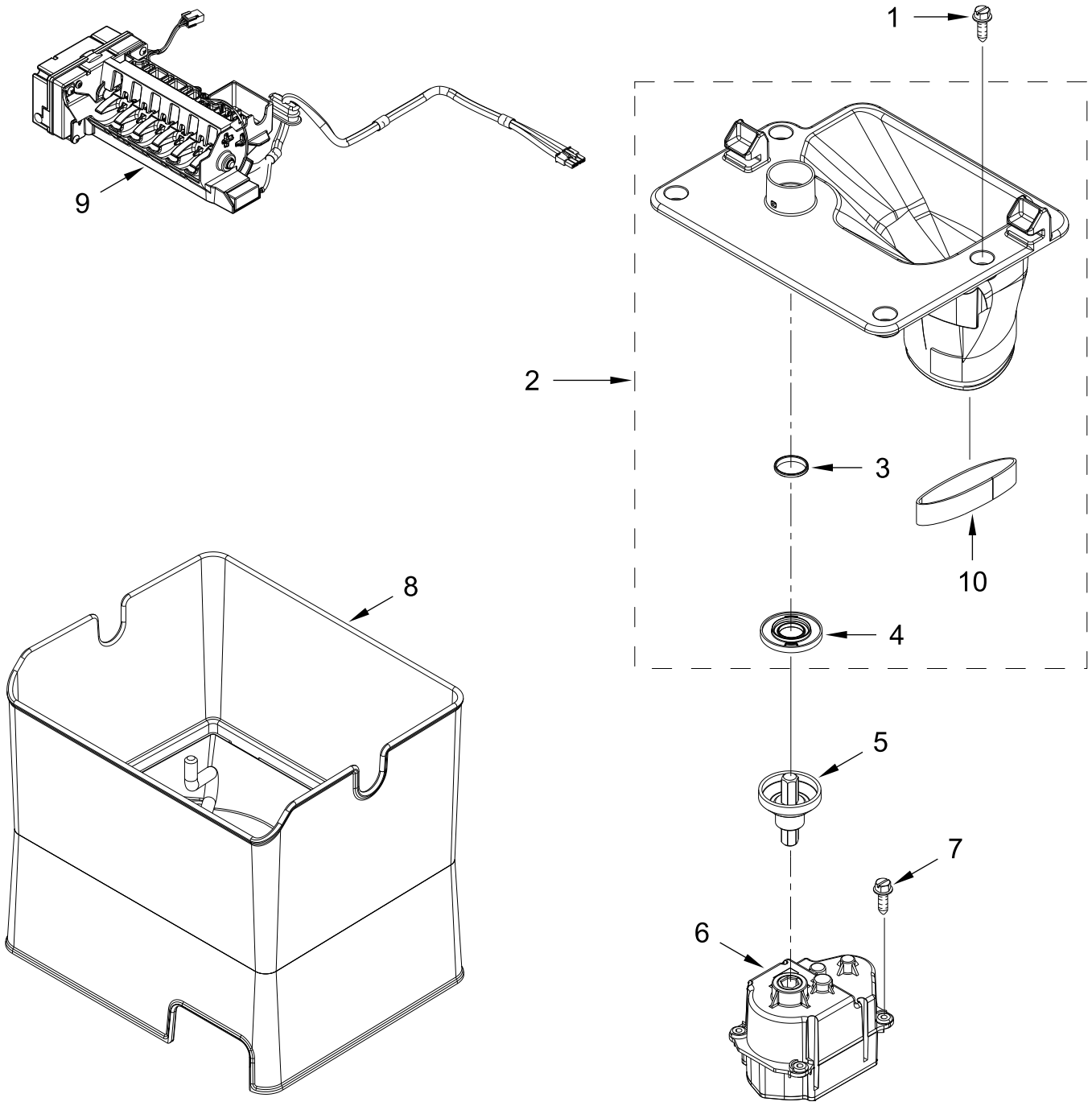

ICEMAKER AND ICE CONTAINER PARTS

Illus. No.	Part No.	Description
1	W10272364	Screw
2	W10347051	Plate, Ice Chute
3	2198628	Seal
4	W10347120	Clip, Retainer
5	W11363576	Shaft, Motor
6	W11185741	Motor, Dispenser
7	8281163	Screw (Stainless)
8	W10347093	Assembly, Ice Container
9	W11457039	Assembly, Icemaker
10	W10291905	Gasket

OPTIONAL PARTS

PAINT, TOUCH-UP (1/2OZ.)

Illus. No.	Part No.	Description
	72017	White
	72032	Black
	W10134625	Apollo Grey
	W10917540	Midnight Grey
	511873	White Porcelain (2 oz.)
	4392899	Biscuit/Bisque

PAINT, PRESSURIZED SPRAY (12 OZ.)

Illus. No.	Part No.	Description
	350930	White
	350939	Enamel, Black
	285006	Black
	350942	White Primer
	4392901	Biscuit/Bisque

PAINT, BULK (1 QT.)

Illus. No.	Part No.	Description
	799344	White (Uncut)

MISCELLANEOUS

Illus. No.	Part No.	Description
	212643	Sealer, Gum (4 Feet)
	479502	Tape, Vinyl (3/4 x 108")
	876370	Insulation (2 Pieces, 3" x 24" x 48")
	876305	Insulation Kit (14 Pieces, 3" x 24" x 48")
	978941	Insulation, Fiberglass (63 1/2" x 35 1/2" x 2 5/8")
	876029	Kit, Foam Slab (30" x 32 1/2" x 1 1/2")
	505587	Sealer, Mastic (1 Qt)
	503695	Cork, Sealer
	20000008	Cleaner, Stainless Steel
	542638	Grease, Silicone (1/2 Oz.)
	542639	Cement, Alumilastic (1 1/4 Oz.)
	833938	Kit, Terminal Connector
	8003RP	Kit, Water Inlet

TORX SCREW WRENCH

Illus. No.	Part No.	Description
	1117510	Torx Key