L-80

CONSUMER CARE TECHNICAL EDUCATION GROUP PRESENTS

cabrio™
FABRIC CARE SYSTEM

AUTOMATIC WASHER WITH 6TH SENSE™ TECHNOLOGY

MODELS: WTW6400S & WTW6600S

JOB AID
Part No. 8178582

FORWARD

This Whirlpool Job Aid, "Cabrio™ Automatic Washer With 6th Sense™ Technology" (Part No.8178582), provides the In-Home Service Professional with information on the installation, operation, and service of the Cabrio™ Automatic Washer With 6th Sense™ Technology. For specific information on the model being serviced, refer to the "Use and Care Guide," or "Tech Sheet" provided with the washer.

The Wiring Diagram used in this Job Aid is typical and should be used for training purposes only. Always use the Wiring Diagram supplied with the product when servicing the unit.

GOALS AND OBJECTIVES

The goal of this Job Aid is to provide information that will enable the In-Home Service Professional to properly diagnose malfunctions and repair the Cabrio™ Automatic Washer With 6th Sense™ Technology.

The objectives of this Job Aid are to:

- Understand and follow proper safety precautions.
- Successfully troubleshoot and diagnose malfunctions.
- Successfully perform necessary repairs.
- Successfully return the washer to its proper operational status.

WHIRLPOOL CORPORATION assumes no responsibility for any repairs made on our products by anyone other than authorized In-Home Service Professionals.

Copyright © 2006, Whirlpool Corporation, Benton Harbor, MI 49022

TABLE OF CONTENTS

	Page
GENERAL	1-1
Washer Safety	1-1
Model & Serial Number Designations	1-2
Model & Serial Number Label & Tech Sheet Locations	1-3
Specifications	1-4
Impeller Wash Program/Selectability	1-6
INSTALLATION INFORMATION	2-1
Installation Requirements	2-1
Installation Instructions	2-5
PRODUCT OPERATION	3-1
Theory Of Operation	3-1
Washer Use	3-3
Washer Care	3-12
Troubleshooting	3-14
COMPONENT ACCESS	4-1
Component Locations	4-1
Removing The Encoder And The User Interface Board	4-2
Removing The Water Inlet/Dispenser Valve Assembly, Power Supply Cord, And Machine/Motor Control & Pressure Transducer	4-4
Removing A Dispenser, The Fresh Fill Inlet Valve, And The Lid Lock	4-6
Removing The Lid And A Hinge	4-9
Removing The Basket, Basket Hub, & Lint Filter	4-10
Removing The Drain And Recirculation Pumps	4-12
Removing The Drive Motor & Rotor Position Sensor	4-14
Removing The Tub	4-16
Accessing The Pressure Transducer Tubing, Recirculation Tube, And Drain Pump Harness	4-18
COMPONENT TESTING	5-1
Water Inlet/Dispenser Valve Assembly	5-1
Drain Pump	5-2
Recirculation Pump	5-2
Lid Lock	5-3
Drive Motor Stator	5-4
DIAGNOSTICS & TROUBLESHOOTING	6-1
Display Fault/Error Codes	6-1
Diagnostic Guide	6-4
Diagnostic Tests	6-4
Troubleshooting Guide	6-9
Troubleshooting Tests	6-9
Accessing & Removing The Electronic Assemblies	6-15
WIRING DIAGRAM	7-1

— NOTES —

GENERAL

WASHER SAFETY

Your safety and the safety of others are very important.

We have provided many important safety messages in this manual and on your appliance. Always read and obey all safety messages.

This is the safety alert symbol.

This symbol alerts you to potential hazards that can kill or hurt you and others.

All safety messages will follow the safety alert symbol and either the word "DANGER" or "WARNING." These words mean:

⚠ DANGER **You can be killed or seriously injured if you don't immediately follow instructions.**

⚠ WARNING **You can be killed or seriously injured if you don't follow instructions.**

All safety messages will tell you what the potential hazard is, tell you how to reduce the chance of injury, and tell you what can happen if the instructions are not followed.

MODEL & SERIAL NUMBER DESIGNATIONS

MODEL NUMBER

MODEL NUMBER W T W 6 6 00 S W 0

BRAND
- W = Whirlpool
- E = Estate
- R = Roper
- I = Inglis

ACCESS / FUEL
- T = Top Load
- F = Front Load
- W = Work Space
- E = Electric
- G = Gas
- H = Horizontal
- V = Vertical

PRODUCT
- W = Washer
- D = Dryer
- T = Thin Twin
- P = Pedestal
- B = Combo
- C = Compact

SERIES
- 1 = Innovation
- 2 = Commercial
- 3 = Compact
- 4 = Stack
- 5 = LEAP
- 6 = Oasis
- 7 = Merloni
- 8 = Horizon
- 9 = Duet/Combo

PRICE POINT LEVELS (1 - 7)

TRADE PARTNER
- 00 = Brand
- 10 = SBC
- 20 = Best Buy
- 30 = NATM
- 40 = Lowe's

YEAR OF INTRODUCTION
- S = 2006
- T = 2007

COLOR CODE
- W = White w/Silver Metallic Console
- G = Biscuit w/Gold Metallic Console
- B = Black w/Black Metallic Console

ENGINEERING CHANGE
- 0 = Basic Original Release
- 1 = First Revision

SERIAL NUMBER

SERIAL NUMBER C T 41 10200

MANUFACTURING SITE
C = Clyde, OH

YEAR OF PRODUCTION
T = 2006

WEEK OF PRODUCTION
41 = 41st Week

PRODUCT SEQUENCE NUMBER

MODEL & SERIAL NUMBER LABEL & TECH SHEET LOCATIONS

The Model/Serial Number Label and Tech Sheet locations are shown below.

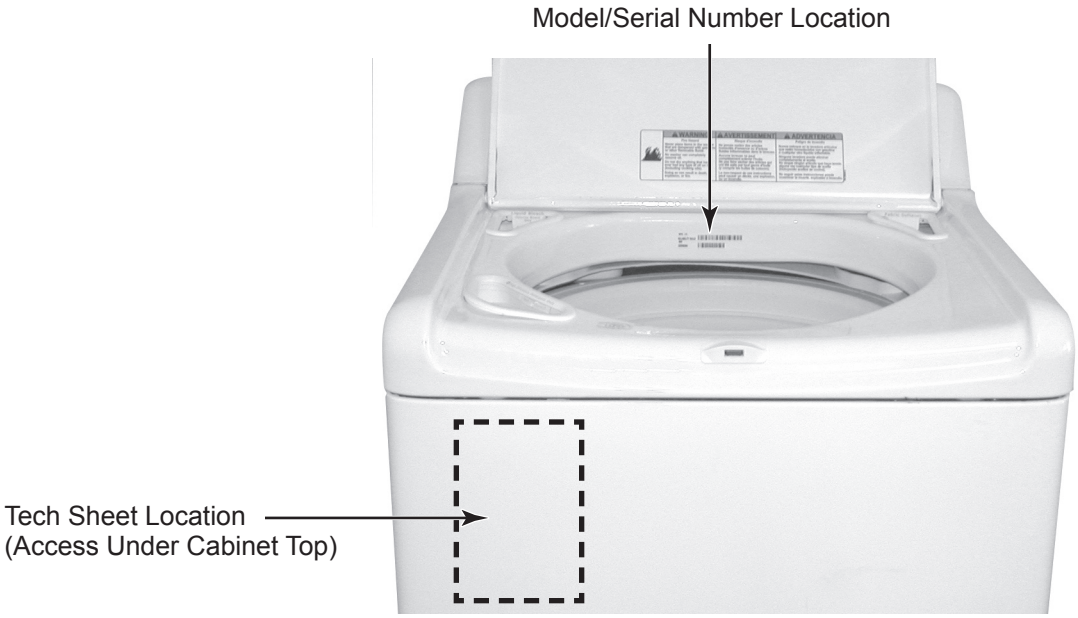

SPECIFICATIONS

MODEL NUMBERS	WTW6400SW	WTW6600SW, G, B
PRIMARY FEATURES		
CAPACITY (IEC)	4.5 CU FT	4.5 CU FT
USABLE CAPACITY	18 LBS (8.16 KG)	18 LBS (8.16 KG)
MAX SPIN SPEED	950	1000
EXTERIOR		
LID FINISH	PORCELAIN	POWDER COAT
LID	SOLID	GLASS
TOP FINISH	PORCELAIN	PORCELAIN
AGITATOR	---	---
WASHPLATE	IMPELLER	IMPELLER
SOUND PACK	Q. WASH PLUS	Q. WASH ULTRA
TUB WRAP	NO	YES
MASTIC (FRONT)	1 - 4 X 12 PIECE	1 - 4 X 12 PIECE
CABINET PAD	YES	YES
LID SEALS	NO	YES
MAIN DRIVE MOTOR	BRUSHLESS PERM MAGNET	BRUSHLESS PERM MAGNET
DISPENSERS		
MAIN DETERGENT	YES	YES
TYPE	FLUSH	FLUSH
CAPACITY	2/3 CUP	2/3 CUP
BLEACH	YES	YES
TYPE	FLUSH/TIMED	FLUSH/TIMED
CAPACITY	1 CUP	1 CUP
FABRIC SOFTENER	YES	YES
TYPE	FLUSH/TIMED	FLUSH/TIMED
CAPACITY	1/2 CUP	1/2 CUP
CYCLE DEFINITIONS		
# OF CYCLES	10 HEAVY DUTY NORMAL WHITEST WHITES DELICATES/HANDWASH PERM PRESS / CASUAL SHEETS/TOWELS DARKS / COLORS QUICK WASH BULKY WOOL —	11 HEAVY DUTY NORMAL WHITEST WHITES DELICATES/HANDWASH PERM PRESS / CASUAL HANDWASH DARKS / COLORS QUICK WASH BULKY WOOL SOAK
DELAY START	— RINSE / SPIN DRAIN / SPIN CLEAN WASHER	YES -10 HOURS RINSE / SPIN DRAIN / SPIN CLEAN WASHER
OPTIONS		
FINAL SPIN SPEEDS	SELECTABLE (3) L, M, H	SELECTABLE (4) NO SPIN, L, M, H
SOAK	PRE SOAK	PRE SOAK
CATALYST OPTIONS	DEEP CLEAN EXTRA RINSE	DEEP CLEAN EXTRA RINSE

MODEL NUMBERS	WTW6400SW	WTW6600SW, G, B
SECONDARY		
EOC	OFF / SOFT / LOUD	OFF / SOFT / LOUD
TIME REMAINING	YES	YES
TEMPS	5 - 4 ATC	5 - 4 ATC
ATC TEMPS	H/C , W/W, W/C, C/C	H/C , W/W, W/C, C/C
AUTO WATER LEVEL	YES	YES
WATER LEVELS	AUTO - NON SELECTABLE MIN. LEVEL = 3.5˝ (9 CM) ABOVE BASKET BOTTOM	AUTO - NON SELECTABLE MIN. LEVEL = 3.5˝ (9 CM) ABOVE BASKET BOTTOM
SOIL LEVELS	4	4
STATUS LED'S	WASH (4) / STATUS (3) SOAK WASHING RINSING SPIN DONE ADD-A-GARMENT LID LOCKED	WASH (4) / STATUS (3) SOAK WASHING RINSING SPIN DONE ADD-A-GARMENT LID LOCKED
ADDITIONAL INFORMATION		
COLORS	WHITE	WHITE / BISCUIT / BLACK
SIZE (W X D X H)	28 X 27 X 42 IN (71.2 x 68.5 X 106.6 CM)	28 X 27 X 42 IN (71.2 x 68.5 X 106.6 CM)
WEIGHT (IN CARTON)	165 LBS (74.8 KG)	165 LBS (74.8 KG)

IMPELLER WASH PROGRAM / SELECTABILITY

WTW 6400S

	Cycles	Whitest/ Whites	Heavy Duty	Normal	Perm Press/ Casual	Quick Wash	Towels/ Sheets	Bulky Items	Darks/ Colors	Wool	Handwash / Delicate	Drain & Spin	Rinse & Spin
Options	Pre-Soak	x	x	x	x	x	o	x	x	o	x	o	o
	Deep Clean	x	**D**	x	x	x	o	o	x	o	x	o	o
	Extra Rinse	**D**	x	x	x	x	x	x	x	x	x	o	x
Soil Level	Light	x	x	x	x	**D**	x	x	x	**D**	**D**	o	o
	Medium	x	x	x	**D**	x	x	x	x	x	x	o	o
	Normal	x	x	**D**	x	x	**D**	**D**	**D**	x	x	o	o
	Heavy	**D**	**D**	x	x	x	x	x	x	x	x	o	o
Spin Speed (RPM)	Low	530	530	o	400	530	530	530	530	**400**	**400**	530	530
	Medium	800	800	900	**530**	800	800	**800**	800	530	530	800	800
	High	**950**	**950**	**950**	800	**950**	**950**	o	**950**	o	o	**950**	**950**
Wash/Rinse Temp	H/C	**D**	**D**	x	x	x	x	x	o	o	o	o	o
	ATC W/W	x	x	o	x	**D**	x	x	o	x	o	o	x
	ATC W/C	x	x	**D**	**D**	x	**D**	**D**	x	x	x	o	x
	ATC C/C	x	x	x	x	x	x	x	**D**	**D**	**D**	o	**D**
Wash Action	Strong	**D**	**D**	o	o	**D**	o	o	o	o	o	o	o
	Regular	o	o	**D**	**D**	o	o	o	**D**	o	o	o	**D**
	Gentle	o	o	o	o	o	o	o	o	**D**	**D**	o	o
	Bulky	o	o	o	o	o	o	**D**	o	o	o	o	o
	Sheets	o	o	o	o	o	**D**	o	o	o	o	o	o
Estimated Time Remaining		**76**	**66**	**43**	**44**	**34**	**46**	**46**	**42**	**35**	**35**	**10**	**20**
With Options	Pre-Soak	+14	+14	+15	+14	+15	o	+15	+15	o	+14	o	o
	Deep Clean	+6	-5	+6	+5	+6	o	o	+6	o	+6	o	o
	Extra Rinse	-13	+14	+13	+12	+13	+14	+15	+13	+12	+13	o	+12

D = Default Setting
x = Selectable Setting
o = Not Selectable

WTW 6600S

	Cycles	Whitest/ Whites	Heavy Duty	Normal	Perm Press/ Casual	Quick Wash	Towels/ Sheets	Bulky Items	Darks/ Colors	Wool	Soak	Handwash/ Delicate	Drain & Spin	Rinse & Spin
Options	Pre-Soak	x	x	x	x	x	o	x	x	o	o	x	o	o
	Deep Clean	x	**D**	x	x	x	o	o	x	o	o	x	o	o
	Extra Rinse	**D**	x	x	x	x	x	x	x	x	o	x	o	x
Soil Level	Light	x	x	x	x	**D**	x	x	x	**D**	15	**D**	o	o
	Medium	x	x	x	**D**	x	x	x	x	x	**30**	x	o	o
	Normal	x	x	**D**	x	x	**D**	**D**	**D**	x	60	x	o	o
	Heavy	**D**	**D**	x	x	x	x	x	x	x	90	x	o	o
Spin Speed (RPM)	No Spin	0	0	0	0	0	0	0	0	0	**0**	0	o	0
	Low	530	530	o	400	530	530	530	530	**400**	o	**400**	530	530
	Medium	800	800	900	**530**	800	800	**800**	800	530	o	530	800	800
	High	**1000**	**1000**	**1000**	800	**1000**	**1000**	o	**1000**	o	o	o	**1000**	**1000**
Wash/Rinse Temp	Tap C/C	x	x	x	x	x	x	x	x	x	x	x	o	x
	H/C	**D**	**D**	x	x	x	x	x	o	o	x	o	o	o
	ATC W/W	x	x	o	x	**D**	x	x	o	x	x	o	o	x
	ATC W/C	x	x	**D**	**D**	x	**D**	**D**	x	x	**D**	x	o	x
	ATC C/C	x	x	x	x	x	x	x	**D**	**D**	x	**D**	o	**D**
Wash Action	Strong	**D**	**D**	o	o	**D**	o	o	o	o	o	o	o	o
	Regular	o	o	**D**	**D**	o	o	o	**D**	o	o	o	o	**D**
	Gentle	o	o	o	o	o	o	o	o	**D**	o	**D**	o	o
	Bulky	o	o	o	o	o	o	**D**	o	o	o	o	o	o
	Soak	o	o	o	o	o	o	o	o	o	**D**	o	o	o
	Sheets	o	o	o	o	O	**D**	o	o	o	o	o	o	o
Estimated Time Remaining		**76**	**66**	**43**	**44**	**34**	**46**	**46**	**42**	**35**	**41**	**35**	**10**	**20**
With Options	Pre-Soak	+14	+14	+14	+14	+14	o	+15	+14	O	o	+14	o	o
	Deep Clean	+6	-5	+6	+5	+6	o	o	+6	O	o	+6	o	o
	Extra Rinse	-13	+14	+13	+12	+13	+14	+15	+13	+12	o	+13	o	+12

D = Default Setting
x = Selectable Setting
o = Not Selectable

— NOTES —

INSTALLATION INFORMATION

INSTALLATION REQUIREMENTS

TOOLS AND PARTS

Gather the required tools and parts before starting installation. The parts supplied are in the washer basket.

Tools needed for connecting the drain hose and water inlet hoses:

- Pliers that open to 1-9/16˝ (3.95 cm)
- Flashlight (optional)

Parts Supplied:

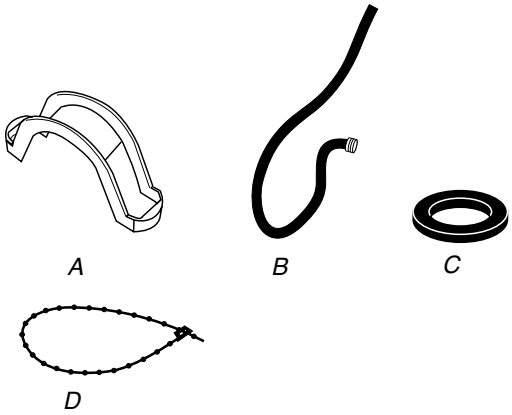

A. Drain hose form
B. Water inlet hoses (2)
C. Flat water inlet hose washers (4)
D. Beaded tie strap

Tools needed for securing the drain hose and leveling the washer:

- Adjustable or open end wrench 9/16˝ (14 mm)
- Level
- Wood block
- Ruler or measuring tape

Alternate Parts

Your installation may require additional parts. If you are interested in purchasing one of the items listed here, call the toll-free number on the cover or in the “Assistance or Service” section of the “Use & Care Guide.”

If You Have:	You Will Need to Buy:
Laundry tub or standpipe taller than 96˝ (2.4 m)	Sump pump system (if not already available)
1˝ (2.5 cm) diameter standpipe	2˝ (5 cm) diameter to 1˝ (2.5 cm) diameter standpipe adapter, Part Number 3363920 and connector kit Part Number 285835
Overhead sewer	Standard 20 gal. (76 L) 39˝ (99 cm) tall drain tub or utility sink, sump pump and connectors (available from local plumbing suppliers)
Floor drain	Siphon break, Part Number 285834; additional drain hose, Part Number 8318155 and connector kit, Part Number 285835
Water faucets beyond reach of fill hoses	2 longer water fill hoses: 6 ft (1.8 m) Part Number 76314, 10 ft (3.0 m) Part Number 350008
Lint clogged drain	Drain protector, Part Number 367031

LOCATION REQUIREMENTS

Selecting the proper location for your washer improves performance and minimizes noise and possible washer “walk.”

The washer can be installed in a basement, laundry room, closet, or recessed area. See “Drain System.”

IMPORTANT: Do not install or store the washer where it will be exposed to the weather.

Proper installation is your responsibility.

You will need:

- A water heater set to deliver 120°F (49°C) water to the washer.
- A grounded electrical outlet located within 4 ft (1.2 m) of where the power cord is attached to the back of the washer. See “Electrical Requirements.”
- Hot and cold water faucets located within 3 ft (90 cm) of the hot and cold water fill valves, and water pressure of 20-100 psi (138-690 kPa) for best performance.
- A level floor with a maximum slope of 1˝(2.5 cm) under entire washer. Installing the washer on carpeting is not recommended.
- A sturdy floor to support the washer weight (washer, water and load) of 315 lbs (143 kgs).

Do not store or operate your washer in temperatures at or below 32°F (0°C). Some water can remain in the washer and can cause damage in low temperatures.

INSTALLATION SPACING FOR RECESSED AREA AND CLOSET INSTALLATIONS

The following spacing dimensions are recommended for this washer. This washer has been tested for installation with spacing of 0˝ (0 cm) clearance on the sides. Recommended spacing should be considered for the following reasons:

- Additional spacing should be considered for ease of installation and servicing.
- Additional spacing should be considered on all sides of the washer to reduce noise transfer.
- For closet installation with a door, minimum ventilation openings in the top and bottom of the door are required. Louvered doors with equivalent ventilation openings are acceptable.
- Companion appliance spacing should also be considered.

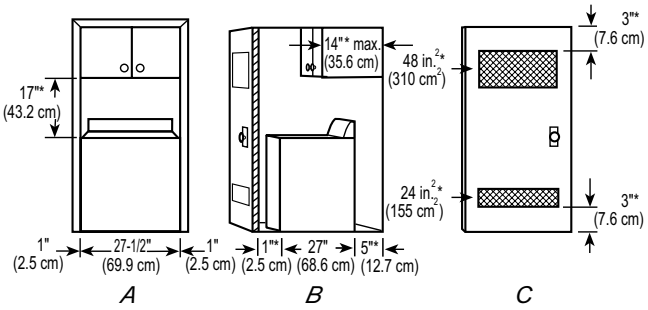

A. Front view
B. Side view
C. Closet door with vents

* Required spacing

DRAIN SYSTEM

The washer can be installed using the standpipe drain system (floor or wall), the laundry tub drain system, or the floor drain system. Select the drain hose installation method you need. See “Tools and Parts.”

STANDPIPE DRAIN SYSTEM—WALL OR FLOOR (VIEWS A & B)

The standpipe drain requires a minimum diameter standpipe of 2˝ (5 cm). The minimum carry-away capacity can be no less than 17 gal. (64 L) per minute. A 2˝ (5 cm) diameter to 1˝ (2.5 cm) diameter standpipe adapter kit is available. See “Tools and Parts.”

The top of the standpipe must be at least 39˝ (99 cm) high and no higher than 96˝ (244 cm) from the bottom of the washer.

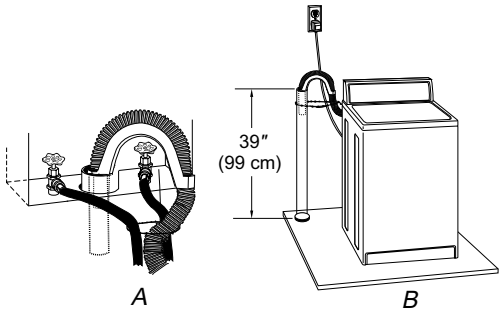

LAUNDRY TUB DRAIN SYSTEM (VIEW C)

The laundry tub needs a minimum 20 gal. (76 L) capacity. The top of the laundry tub must be at least 39˝ (99 cm) above the floor and no higher than 96˝ (244 cm) from the bottom of the washer.

FLOOR DRAIN SYSTEM (VIEW D)

The floor drain system requires a siphon break that may be purchased separately. See “Tools and Parts.”

The siphon break must be a minimum of 28˝ (71 cm) from the bottom of the washer. Additional hoses might be needed.

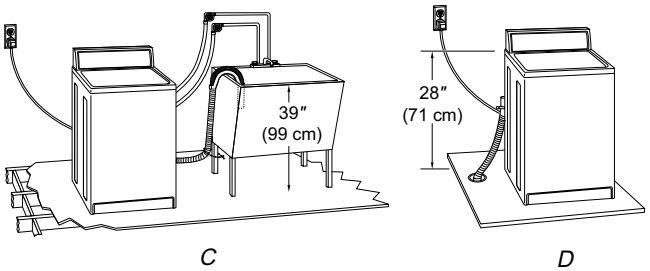

ELECTRICAL REQUIREMENTS

⚠ WARNING

Electrical Shock Hazard

Plug into a grounded 3 prong outlet.

Do not remove ground prong.

Do not use an adapter.

Do not use an extension cord.

Failure to follow these instructions can result in death, fire, or electrical shock.

- A 120 volt, 60 Hz., AC only, 15- or 20-amp, fused electrical supply is required. A time-delay fuse or circuit breaker is recommended. It is recommended that a separate circuit serving only this appliance be provided.
- This washer is equipped with a power supply cord having a 3 prong grounding plug.
- To minimize possible shock hazard, the cord must be plugged into a mating, 3 prong, grounding-type outlet, grounded in accordance with local codes and ordinances. If a mating outlet is not available, it is the personal responsibility and obligation of the customer to have the properly grounded outlet installed by a qualified electrician.
- If codes permit and a separate ground wire is used, it is recommended that a qualified electrician determine that the ground path is adequate.
- Do not ground to a gas pipe.
- Check with a qualified electrician if you are not sure the washer is properly grounded.
- Do not have a fuse in the neutral or ground circuit.

GROUNDING INSTRUCTIONS

For a grounded, cord-connected washer:

This washer must be grounded. In the event of a malfunction or breakdown, grounding will reduce the risk of electrical shock by providing a path of least resistance for electric current. This washer is equipped with a cord having an equipment-grounding conductor and a grounding plug. The plug must be plugged into an appropriate outlet that is properly installed and grounded in accordance with all local codes and ordinances.

WARNING: Improper connection of the equipment-grounding conductor can result in a risk of electric shock. Check with a qualified electrician or serviceman if you are in doubt as to whether the appliance is properly grounded.

Do not modify the plug provided with the appliance—if it will not fit the outlet, have a proper outlet installed by a qualified electrician.

For a permanently connected washer:

This washer must be connected to a grounded metal, permanent wiring system, or an equipment-grounding conductor must be run with the circuit conductors and connected to the equipment-grounding terminal or lead on the appliance.

INSTALLATION INSTRUCTIONS

⚠ WARNING

Excessive Weight Hazard

Use two or more people to move and install washer.

Failure to do so can result in back or other injury.

NOTE: To avoid floor damage, set the washer onto cardboard before moving across floor.

IMPORTANT:

- Be sure the foam shipping base has been removed from the bottom of the washer as directed in the Unpacking Instructions.
- If foam shipping base has not been removed, be sure lid is secured with tape before laying washer on its back.
- Removing the foam shipping base is necessary for proper operation.

REMOVE SHIPPING BASE AND PACKING RING

1. Place cardboard supports from shipping carton on floor behind washer for support.
2. Using 2 or more people, tip the washer onto its back and place on cardboard supports.
3. Remove foam shipping base.

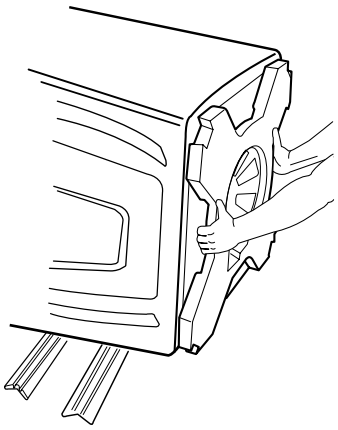

4. Set washer upright.
5. Remove tape from lid. Open lid and remove foam packing ring from washer tub. Keep foam packing ring in case you need to move the washer in the future.

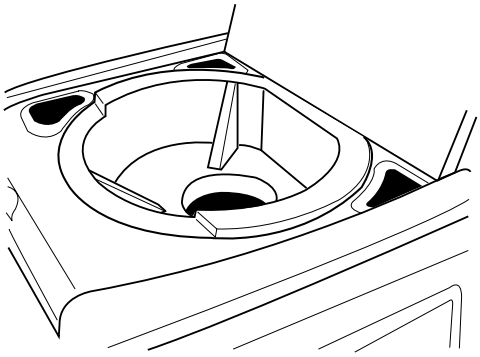

CONNECT DRAIN HOSE

Proper connection of the drain hose protects your floors from damage due to water leakage. Read and follow these instructions.

The drain hose is connected to your washer and is stored inside the washer cabinet.

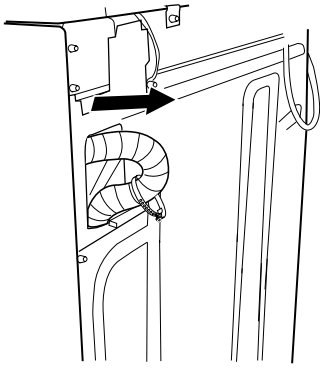

REMOVE DRAIN HOSE FROM WASHER CABINET

Pull the corrugated drain hose out of the washer by first grabbing the pull tie. Continue to pull the hose until the end emerges. Do not force excess drain hose back into the rear of the washer.

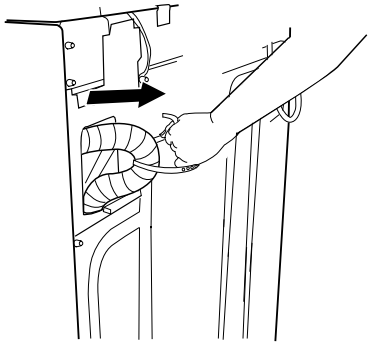

LAUNDRY TUB DRAIN OR STANDPIPE DRAIN

Connecting the drain hose form to the corrugated drain hose

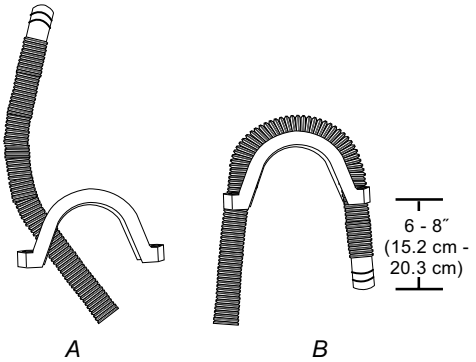

A. Feed end of drain hose into one end of form. Secure the lip of the form into one of the hose ribs.

B. Bend the hose over the top of the form and feed into the other end of the form, extending it 6-8″ (15.2 cm - 20.3 cm) beyond the form. Secure the lip of form into one of the hose ribs.

To keep drain water from going back into the washer:

- Do not force excess drain hose into standpipe. Hose should be secure but loose enough to provide a gap for air.
- Do not lay excess hose on the bottom of the laundry tub.

FLOOR DRAIN

Do not install the drain hose form on to the corrugated drain hose. You may need additional parts. See Floor drain under “Tools and Parts.”

CONNECT THE INLET HOSES

1. Insert new flat washers (supplied) into each end of the inlet hoses. Firmly seat the washers in the couplings.

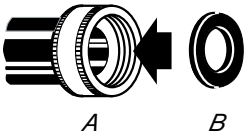

A. Coupling
B. Washer

CONNECT THE INLET HOSES TO THE WATER FAUCETS

Make sure the washer basket is empty.

2. Attach the hose labeled hot to the hot water faucet. Screw on coupling by hand until it is seated on the washer.
3. Attach the hose labeled cold to the cold water faucet. Screw on coupling by hand until it is seated on the washer.
4. Using pliers, tighten the couplings with an additional two-thirds turn.

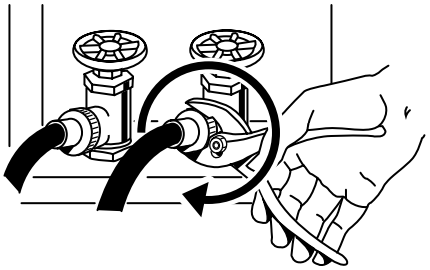

Tighten the couplings with an additional two-thirds turn.

NOTE: Do not overtighten or use tape or sealants on the valve. Damage to the valves can result.

Clear the water lines

- Run water through both faucets and inlet hoses, into a laundry tub, drainpipe or bucket, to get rid of particles in the water lines that might clog the inlet valve screens.
- Check the temperature of the water to make sure that the hot water hose is connected to the hot water faucet and that the cold water hose is connected to the cold water faucet.

CONNECT THE INLET HOSES TO THE WASHER

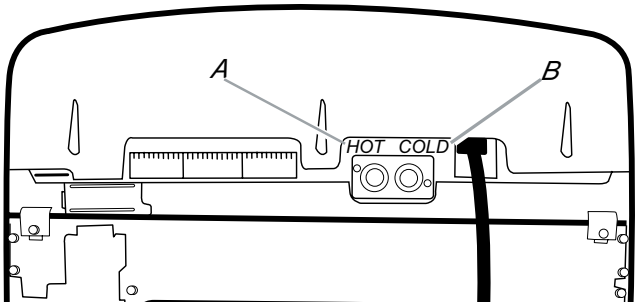

A. Hot water inlet valve
B. Cold water inlet valve

1. Attach the hot water hose to the inlet valve labeled hot.
2. Attaching one hose coupling first makes it easier to tighten the connection with pliers.
3. Screw on coupling by hand until it is seated on the washer.

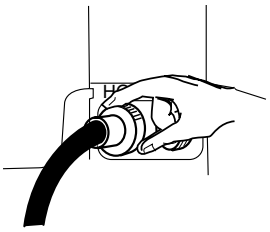

4. Using pliers, tighten the coupling with an additional two-thirds turn.

NOTE: Do not overtighten or use tape or sealants on the valve. Damage to the valves can result.

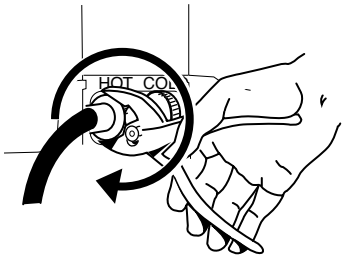

5. Attach the cold water hose to the inlet valve labeled cold.
6. Screw on coupling by hand until it is seated on the washer.
7. Using pliers, tighten the coupling with an additional two-thirds turn.

NOTE: Do not overtighten or use tape or sealants on the valve. Damage to the valves can result.

Check for leaks

- Turn on the water faucets and check for leaks. A small amount of water might enter the washer. You will drain this in a later step.

NOTE: Replace inlet hoses after 5 years of use to reduce the risk of hose failure. Record hose installation or replacement dates for future reference.

- If you connect only one water hose, you must cap off the remaining water inlet port.
- Periodically inspect and replace hoses if bulges, kinks, cuts, wear, or leaks are found.

SECURE THE DRAIN HOSE

1. Drape the power cord over the console.
2. Remove any cardboard used to move washer.

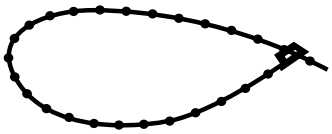

Beaded tie strap

3. Fasten the drain hose to the laundry tub leg or drain standpipe with the beaded tie strap. See view A or B.

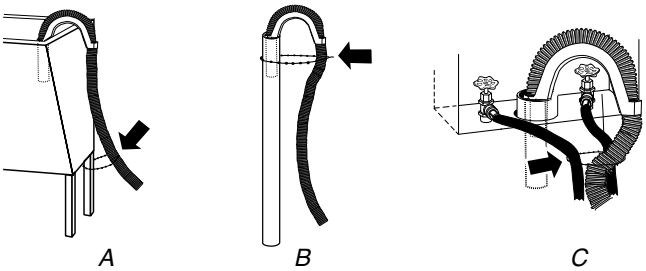

If the washer faucets and the drain standpipe are recessed, put the formed end of the drain hose into the standpipe. Tightly wrap the tie strap around the water inlet hoses and the drain hose. See view C.

LEVEL THE WASHER

⚠ WARNING

Excessive Weight Hazard

Use two or more people to move and install washer.

Failure to do so can result in back or other injury.

One washer foot has been installed at a different height on the washer. The other three feet were preset at the factory. Properly leveling your washer will minimize noise and vibration.

1. Slide the washer to its final location.
2. Push on upper front panel to be sure the washer is on its rear feet.

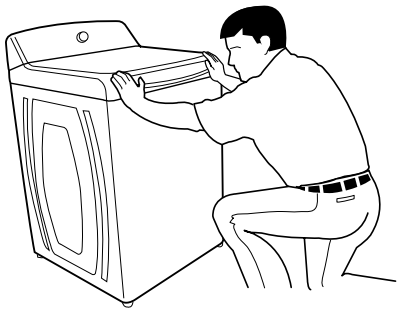

3. Lower right front foot until it contacts the floor. By hand, firmly rotate foot as much as an additional 1-1/2 turns. The other three feet have been preset at the factory.

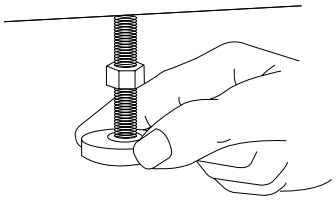

4. Check the levelness of the washer by first placing a level on the lid near the console. Next, place the level on the side of the washer in the crease between the top of the washer and the cabinet.

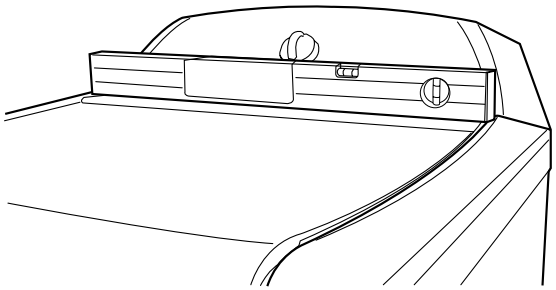

Level the front.

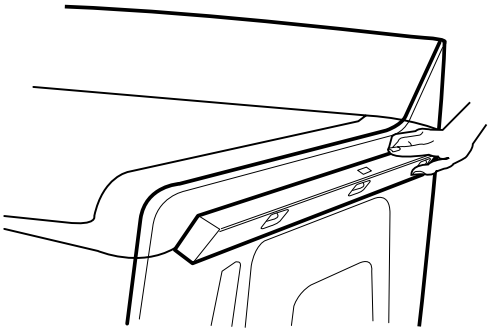

Level the side.

5. If the washer is not level, move the washer out slightly, tip back, prop up the front of the washer on a wood block. Adjust the feet up or down as necessary by twisting the feet. Repeat steps 1 through 4 until washer is level.
6. Use a 9/16˝ or 14 mm open-end wrench to turn the locknut counterclockwise on the foot tightly against the washer cabinet.

IMPORTANT: If the locknut is not tight against the washer cabinet, the washer may vibrate.

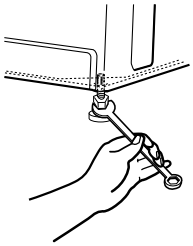

COMPLETE INSTALLATION

1. Check the electrical requirements. Be sure that you have the correct electrical supply and the recommended grounding method. See “Electrical Requirements.”
2. Check that all parts are now installed. If there is an extra part, go back through the steps to see which step was skipped.
3. Check that you have all of your tools.
4. Keep the foam packing ring from the washer tub for future relocation of the washer. Dispose of or recycle all other packaging materials.
5. Check that the water faucets are on.
6. Check for leaks around faucets and inlet hoses.

⚠ WARNING

Electrical Shock Hazard

Plug into a grounded 3 prong outlet.

Do not remove ground prong.

Do not use an adapter.

Do not use an extension cord.

Failure to follow these instructions can result in death, fire, or electrical shock.

7. Plug into a grounded 3 prong outlet.
8. Remove any protective film or tape remaining on the washer.
9. Read “Washer Use.”
10. To test and to clean your washer, measure 1/2 of the detergent manufacturer’s recommended amount of High Efficiency (HE) powdered or liquid detergent for a medium size load and pour it into the detergent dispenser. Close the lid. Press POWER. Select a normal cycle and press Start. Allow it to complete one whole cycle.

— NOTES —

PRODUCT OPERATION

THEORY OF OPERATION

INTRODUCTION

The Cabrio™ Automatic Washer represents a new design that differs from the traditional top load machine. This washer operates without a transmission, motor coupler, belt, basket drive tube, or brake assembly.

NEW COMPONENTS

The washer has the following new components:

Drive Motor—The drive motor is an electronically commutated direct drive 3-phase brushless DC design that moves the impeller/agitator and spin basket without the use of a transmission. The motor is comprised of a stator that is bolted to the base of the washer tub and a rotor that is attached to the drive shaft. The motor direction and speed is controlled by the machine/motor controller, and is monitored by a rotor position sensor, (RPS), located on the stator.

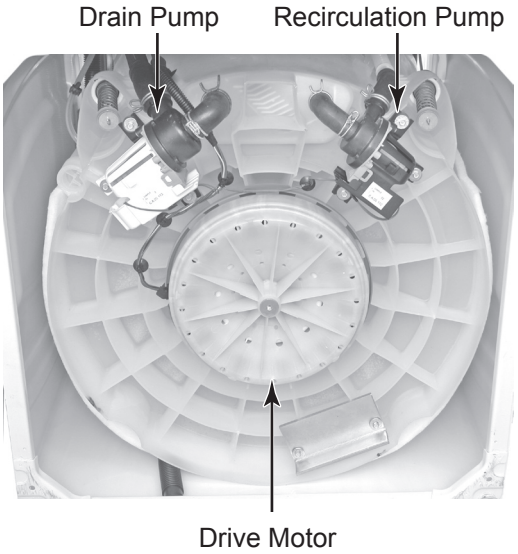

Basket—The basket is designed with a traditional balance ring at the top and a flotation chamber at the base. The outside surface of the basket is punched to allow lint to catch on the holes during the wash cycle. When the water drains, the lint will be flushed off and out the drain.

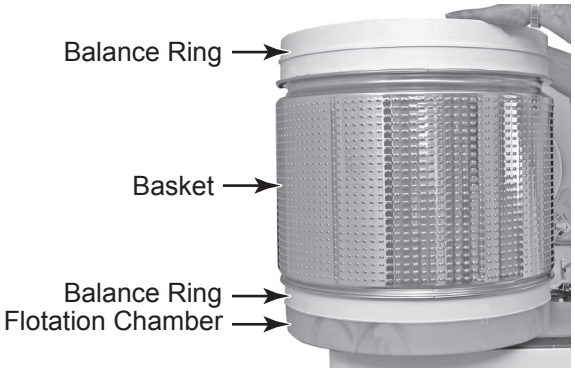

Basket Hub—The basket hub consists of two splined components that engage or disengage based on the position of the basket in the vertical direction. The outer hub component is fastened to the bottom of the basket, while the inner component is attached to the end of the drive shaft.

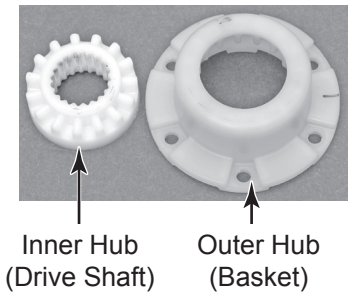

Continued on the next page.

As the tub fills with water, the basket begins to float and to rise. The splined hub components now separate, and allow the basket to move independently of the drive shaft.

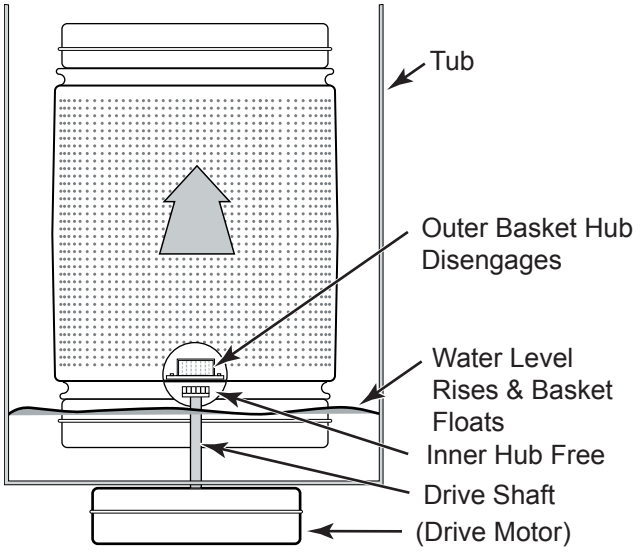

When the tub drains, the basket drops back to it's original position, and the hub components re-engage, connecting the basket to the shaft, and permitting the basket to spin.

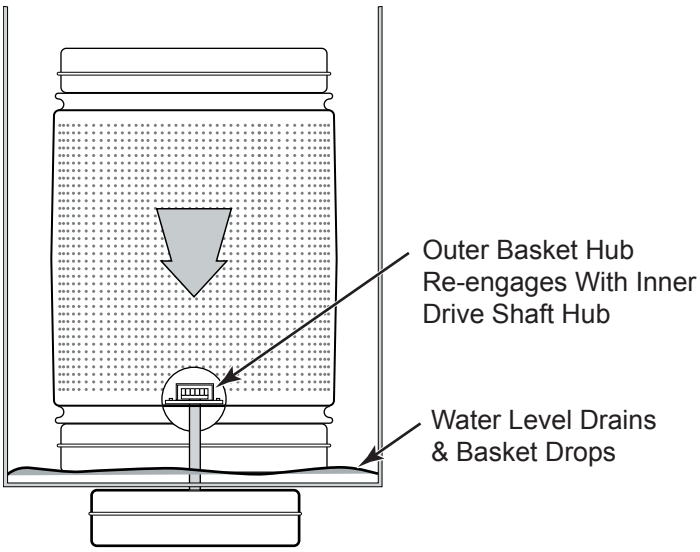

Lid Lock Mechanism—Since this washer does not utilize a brake, a lid lock is used to prevent access during the spin cycles. During the drain and spin portions of the cycle, a lid lock mechanism will lock the lid. The lid locks are based on cycle phase. In general, the lid locks when the basket spins greater than 23 rpm. After main wash, the lid is locked, and remains locked until the end of the cycle. The lid must be closed for the machine to fill, wash, drain, or spin. Magnets in the washer lid close a reed switch in the lid lock. This acts as the lid switch.

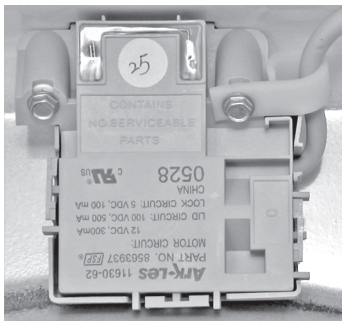

WASHER USE

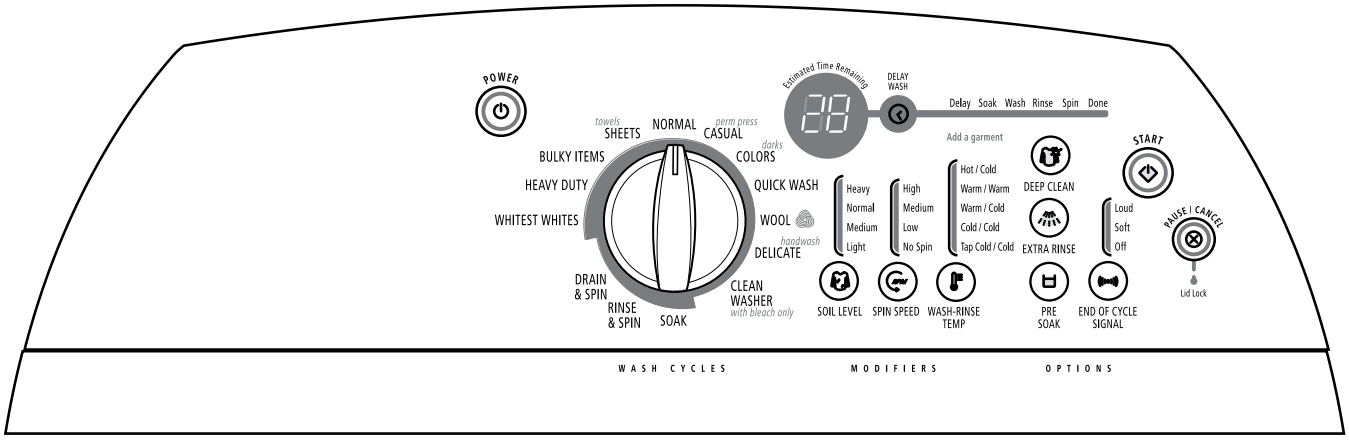

NOTE: Your washer model may differ slightly.

STARTING THE WASHER

⚠ WARNING

Fire Hazard

Never place items in the washer that are dampened with gasoline or other flammable fluids.

No washer can completely remove oil.

Do not dry anything that has ever had any type of oil on it (including cooking oils).

Doing so can result in death, explosion, or fire.

WARNING: To reduce the risk of fire, electric shock, or injury to persons, read the IMPORTANT SAFETY INSTRUCTIONS before operating this appliance.

The following is a guide to starting the washer. Periodic references to other sections of this manual provide more detailed information.

USING THE PROPER DETERGENT

Use only High Efficiency (HE) detergents. The package for this type of detergent will be marked "HE" or "High Efficiency." HE detergents such as TIDE® HE are made to produce the right amount of suds for the best performance in low water wash systems. Follow the detergent manufacturer's instructions to determine the correct amount of detergent to use. The washer's new wash system will create too much sudsing if regular non-HE detergent is used. Using regular detergent will likely result in washer errors, longer cycle times and reduced rinsing performance.

It may also result in component failures and noticeable mold or mildew.

1. Place a load of sorted clothes into the washer.
   - Load evenly to maintain washer balance. Mix large and small items. Items should move easily through the wash water.
   - Load only to the top of the basket as shown. Overloading can cause poor cleaning. Items should move easily through the wash water.

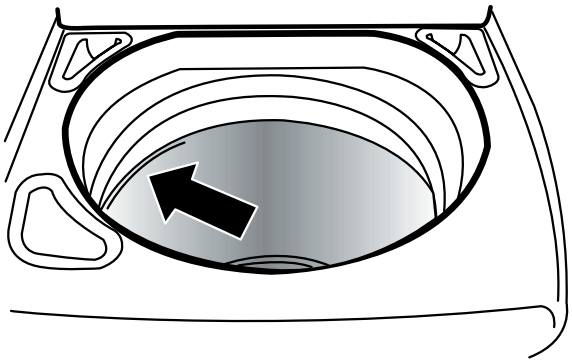

2. Pour measured powdered or liquid High Efficiency (HE) detergent into the detergent dispenser. Do not put detergent directly into the wash tub or onto clothes in the washer.

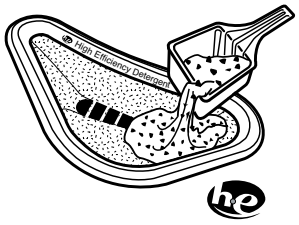

3. Add color-safe bleach, (powdered or liquid) to this dispenser, if needed. Be sure to match powdered color-safe bleach with powdered detergent or match liquid color-safe bleach with liquid detergent.
4. Pour measured liquid chlorine bleach into the liquid chlorine bleach dispenser, if needed. Bleach is diluted and automatically dispensed at the proper time during the wash cycle.

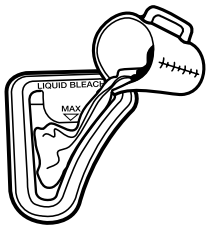

   - Do not overfill. Do not dilute. Do not use more than 1 cup (250 mL) for a full load. Use less with a smaller load size.
   - Follow the garment and the chlorine bleach manufacturer's directions for proper use.
   - To avoid spilling, use a cup with a pouring spout. Do not let bleach splash, drip, or run down into the washer basket.
   - At the end of the cycle, a small amount of water may be left in the dispenser. This is normal.

     NOTE: Use only liquid chlorine bleach in this dispenser.
5. Pour measured liquid fabric softener into the fabric softener dispenser, if desired.

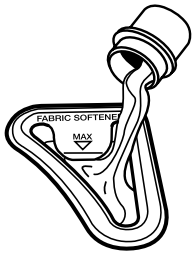

- Do not overfill. The dispenser holds 3 oz. (94 mL), or a capful of fabric softener.
- The fabric softener is dispensed in the final rinse. If Extra Rinse is selected, the fabric softener will be dispensed during the Extra Rinse.
- Do not spill or drip any fabric softener onto the clothes.
- At the end of the cycle, a small amount of water may be left in the dispenser. This is normal.

  NOTE: Use only liquid fabric softener in this dispenser.

6. Close the washer lid.
7. Press POWER. This turns on the washer display.
8. Select a Wash Cycle. See “Cycles.”
9. Select the desired Modifiers. See “Modifiers.”
10. Select an Option, if desired. See “Options.”
11. Select Delay Wash, if desired. See “Delay Wash” in the “Modifiers” section.
12. Press START. The wash cycle begins, and the display shows the estimated remaining time. The lid will lock.

    NOTE: If you do not press Start within 5 minutes of pressing Power, the washer automatically drains and shuts off.

PAUSING OR RESTARTING THE WASHER

ADD A GARMENT

You can place additional clothing in the wash when the “Add a Garment” status light is glowing without sacrificing wash performance.

To add a garment or pause the washer at any time:

1. Press PAUSE/CANCEL once.
2. Wait until the Lid Lock light turns off, then open the lid.
3. Add items.

To restart the washer:

1. Close the lid and press START.
2. To unlock the lid after the Add a Garment period, press PAUSE/CANCEL once. Pressing PAUSE/CANCEL twice will cancel the wash cycle.

STOPPING THE WASHER

You can stop the wash cycle and drain the tub by pressing the PAUSE/CANCEL button twice or the Power button once.

CHANGING CYCLES, MODIFIERS AND OPTIONS

You can change Cycles, Modifiers and Options anytime before Start is pressed. Not all Modifiers and Options are available for all cycles.

- A short tone sounds when a change is selected.
- Three short tones sound if an unavailable combination is selected. The last selection will not be accepted.

CHANGING CYCLES AFTER PRESSING START

1. Press PAUSE/CANCEL twice to cancel the cycle. The washer will drain.
2. Press POWER.
3. Select the desired wash cycle.
4. Select the desired Modifiers and Options.
5. Press START.

The washer restarts at the beginning of the new cycle.

NOTE: If you do not press Start within 5 minutes of pausing the washer, the washer automatically shuts off.

CHANGING MODIFIERS AND OPTIONS AFTER PRESSING START

You can change a Modifier or Option anytime before the selected Modifier or Option begins. You must:

1. Press PAUSE/CANCEL once.
2. Select the desired Modifiers and/or Options.
3. Press START.

TO MANUALLY DRAIN THE WASHER AND SPIN THE LOAD

1. Press PAUSE/CANCEL twice to cancel the wash cycle and drain the washer.
2. Press POWER.
3. Turn knob to select DRAIN & SPIN.
4. Press START.

When the spin is complete, the lid unlocks. Items can be removed from the washer.

STATUS LIGHTS

These lights show which portion of the cycle the washer is operating. They also indicate when you can add other garments to the wash load.

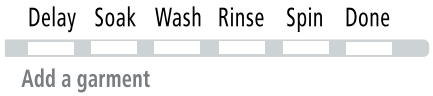

LOAD IS DONE

The Done light stays on until the lid is opened or the Power button is pressed.

INDICATOR LIGHTS

An indicator light shows which Cycle, Modifiers and Options you have selected.

ESTIMATED TIME REMAINING

When a wash cycle is started, the estimated time remaining for the cycle, including fills and drains, will be displayed. The time will count down to the end of the cycle.

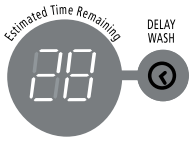

CYCLES

Turn the knob to choose the right wash cycle for the type of fabrics you are washing. When the knob points to a cycle, the indicator light for the cycle will glow and the indicator light for Start will blink. If the default settings for the Modifiers and Options are acceptable, you may press Start to begin the wash cycle.

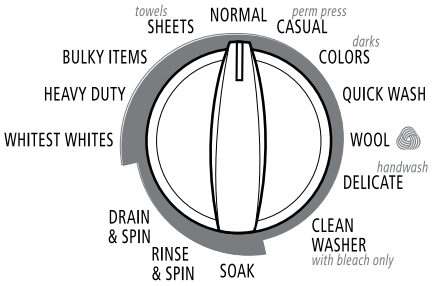

PRESET CYCLE SETTINGS

For ease of use, preset cycle settings provide the recommended fabric care settings for each cycle.

To use the preset cycle settings:

1. Press POWER.
2. Select the cycle you want by turning the knob. The preset cycle settings will be displayed (see the chart on the next page).

   NOTE: The preset times may vary slightly depending on your model.
3. Press START. The wash cycle will begin.

PRESET CYCLE SETTINGS

Cycle	Preset Minutes*	Soil Level**	Wash/Rinse Temp
Whitest Whites	76	Heavy	Hot/Cold
Heavy Duty	66	Heavy	Hot/Cold
Bulky Items	46	Normal	Warm/Cold
Sheets/Towels	46	Normal	Warm/Cold
Normal	43	Normal	Warm/Cold
Casual/Perm Press	44	Medium	Warm/Cold
Colors/Darks	42	Normal	Cold/Cold
Quick Wash	34	Light	Warm/Warm
Wool	35	Light	Cold/Cold
Delicate/Handwash	35	Light	Cold/Cold
Soak	41	Medium	Warm/Cold
Rinse & Spin	20	Not applicable	Cold/Cold
Drain & Spin	10	Not applicable	Not applicable
Clean Washer	60	Not applicable	Not applicable

* These times are for reference only and may not match your model exactly.

** Cycle time in minutes will appear in the display while you are making selections. The total cycle time will appear, including an estimated time for drain and fill times, once Start is pressed.

NOTE: Load only to the top of the basket. Overloading can cause poor cleaning. See “Starting The Washer.”

WHITEST WHITES

This cycle introduces liquid chlorine bleach to the load at the proper time for improved whitening of your heavily soiled white fabrics. Cycle combines high-speed wash action and high-speed spin speed. For maximum soil and stain removal, liquid chlorine bleach must be used.

HEAVY DUTY

Use this cycle for heavily soiled or sturdy items. Cycle combines high-speed wash action and high-speed spin. Deep Clean is the default option for this cycle, but it can be turned off. See “Changing Cycles, Modifiers and Options.”

BULKY ITEMS

Use this cycle to wash large items such as comforters, sleeping bags and blankets. This cycle starts with a soak to thoroughly saturate your large load. This is followed by medium wash action and medium spin speeds to maintain load balance.

SHEETS/TOWELS

Use this cycle for sheets, pillowcases and towels. The wash action of this cycle is designed to keep large items from tangling and balling up.

IMPORTANT: For best performance, drop items in loose heaps evenly around the basket wall. Do not load items directly on the impeller for this cycle.

NORMAL

Use this cycle for normally soiled cottons and mixed fabric loads. Cycle combines high-speed wash action and high-speed spin.

CASUAL/PERM PRESS

Use this cycle to wash loads of no-iron fabrics such as sport shirts, blouses, casual business clothes, permanent press and blends. This cycle uses medium-speed wash action, a low-speed spin and a cool down process to reduce wrinkling.

COLORS / DARKS

Use this cycle for lightly soiled, dark or highly dyed natural fabrics such as cotton that may be susceptible to dye loss. Cycle uses low to medium-speed wash action and high-speed spin. For best results use cold or warm water.

QUICK WASH

Use this cycle to wash small, lightly soiled loads that are needed in a hurry. This short cycle combines high-speed wash action and high-speed spin for the best cleaning and shortened dry times.

WOOL

This cycle combines low-speed wash and low-speed spin action to clean items labeled as “Machine Washable Wool” on the garment care label. Presoak and Deep Clean options are not available in this cycle.

DELICATE/HANDWASH

Use this cycle to wash lightly soiled garments indicating “Machine Washable Silks” or “Gentle” cycle on the care label. This cycle uses intermittent low speed wash action and low-speed spin for the gentlest fabric care with less wrinkling.

Garments are labeled “Handwash” because:

- The fiber construction may be sensitive to wash action.
- The fabric contains sensitive dyes that may bleed.

SOAK

This cycle is preset for a 41-minute cycle and soak time can be adjusted according to your needs by selecting Soil Level. After the selected soak period has ended, the washer will drain but does not spin the load.

NOTE: Automatic bleach dispense is not part of the soak cycle.

RINSE & SPIN

Use this option to get a deep rinse followed by a high-speed spin. The time display will include an estimate of how long it will take to fill and drain the washer.

When to use Rinse & Spin:

- For loads that need rinsing only.
- For completing a cycle after the power has been off.

To use or change Rinse & Spin setting:

1. Turn knob to RINSE & SPIN until the Rinse & Spin indicator light glows.
2. Press START.

DRAIN & SPIN

An extra drain and spin may help shorten drying times for some heavy fabrics or special-care items. Drain & Spin may also be used for draining the washer after canceling a cycle or completing a cycle after a power failure.

To use or change Drain & Spin setting:

1. Turn knob to DRAIN & SPIN until the Drain & Spin indicator light glows.
2. Press START.

CLEAN WASHER

Use the Clean Washer cycle once a month to keep the inside of your washer fresh and clean. This cycle uses a higher water level in combination with liquid chlorine bleach to thoroughly clean the inside of your washing machine.

IMPORTANT: Do not add detergent to this cleaning cycle. Use only liquid chlorine bleach. Do not place garments or other items in the washer during the Clean Washer cycle. Use this cycle with an empty wash tub.

MODIFIERS

Modifiers allow you to further customize the cycles and save energy.

SOIL LEVEL

Soil level (wash time) is preset for each cycle. See “Preset Cycle Settings” in “Cycles.” As you press the Soil Level pad, the cycle time (minutes) will increase or decrease in the Estimated Time Remaining display, and a different wash time will appear. To get the minimum wash time, press the pad until the indicator light next to Light illuminates. This is the shortest wash time available for that cycle.

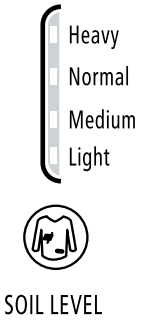

- For most loads, use the time recommended in the preset cycle settings.
- For heavy soil and sturdy fabrics, press Soil Level to select more wash time, if needed.
- For light soil and delicate fabrics, press Soil Level to select less wash time, if needed.

SPIN SPEED

This washer automatically selects the spin speed based on the cycle selected. The preset speeds can be changed. Spin speeds may vary by cycle.

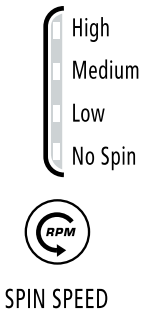

WASH-RINSE TEMP

Select a water temperature based on the type of load you are washing. Use the warmest wash water safe for fabrics. Follow garment label instructions.

Warm rinses leave the loads drier and more comfortable to handle than cold rinses. However, warm rinses also increase wrinkling. Cold rinses may help with wrinkling and save energy.

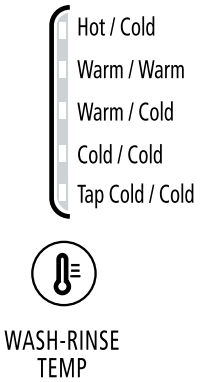

TEMPERATURE GUIDE

Wash Water Temperature	Suggested Fabrics
Hot	Whites and pastels
Warm	Bright colors
Cold	Colors that bleed or fade

NOTE: In wash water temperatures colder than 60°F (15.6°C), detergents do not dissolve well. Soils may be difficult to remove.

CARE CONTROL TEMPERATURE MANAGEMENT

Care Control Temperature Management electronically senses and maintains a uniform wash and rinse water temperature. Care Control regulates incoming hot and cold water and is automatically turned on when a cycle is selected. (See “Preset Cycle Settings” in “Cycles.”)

Care Control is available with Warm/Warm, Warm/Cold and Cold/ Cold settings. The water temperature in the Hot/Cold and Tap Cold/Cold settings depends on the water temperature at the water inlet faucets.

- Care Control ensures consistent cleaning.
- The Hot and Warm setting on this washer will be cooler than you are accustomed to. Wash temperatures in this ENERGY STAR® qualified washer are lower than temperatures you may be used to in conventional washers. Heated water consumes the largest amount of energy that a washer uses.
- Today’s detergents work well at temperatures above 60°F (15.6°C).

DELAY WASH

You can use the Delay Wash feature to delay the start of a wash cycle for up to 10 hours (depending on your model).

1. Load the washer and fill the dispensers.
2. Close the washer lid.
3. Press POWER.
4. Select the desired Cycle, Modifiers and Options.
5. Press DELAY WASH. 1H (one hour) will be displayed in the time display window. The indicator light for Delay Wash will glow.

6. For a longer delay time, press DELAY WASH. The Start time will increase by 1-hour steps.
7. Press START. The countdown in hours to the wash cycle will show in the time display window and the indicator light will begin to flash.

   NOTE: The Start indicator light will not flash when Delay Wash is chosen. You must press Start to initiate a countdown for the cycle to begin.

To change the Delay Wash time:

- Press PAUSE/CANCEL.
- Press DELAY WASH to select the desired delay time.
- Press START to begin the countdown.

To cancel Delay Wash:

Press START again to begin the cycle right away or press PAUSE/CANCEL twice.

OPTIONS

Use these pads to select the desired options for your wash cycle.

DEEP CLEAN

This option provides enhanced cleaning action for tough stains. The Heavy Duty cycle automatically includes Deep Clean. Choosing Deep Clean will add approximately 5 minutes to a cycle. Deep Clean should be started on a dry load only and should not be selected after the tub has started filling with water.

Deep Clean may be selected as an option with other cycles. See table for details.

Cycle	Deep Clean (Adds time to the wash cycle)
Whitest Whites	Option
Heavy Duty	Default
Bulky Items	Not available
Sheets/Towels	Not available
Normal	Option
Casual/Perm Press	Option
Colors/Darks	Option
Quick Wash	Option
Wool	Not available
Delicate/Handwash	Option
Soak	Not available
Rinse & Spin	Not available
Drain & Spin	Not available
Clean Washer	Not available

EXTRA RINSE

An extra rinse can be used to aid in the removal of detergent or bleach residue from garments. This option provides an additional rinse with the same water temperature as the first rinse. This is the default rinse setting for the Whitest Whites cycle.

PRESOAK

Use this option for set-in stains and soil that need extra time for removal. Soaking in this washer is different than in a conventional washer. The washer sprays the load with water and detergent for 4 minutes at extra-low spin speed followed by a brief period of wash action at the speed of the selected cycle. Then another 4 minutes of spraying and extra-low spinning occurs. The wash action then pauses for the detergent to work on the soils. The Presoak feature is followed by the selected cycle. Using Presoak will extend your wash cycle.

END OF CYCLE SIGNAL VOLUME

The End of Cycle Signal produces an audible sound when the wash cycle is finished. This signal is helpful when you are removing items from the washer as soon as it stops. Select Loud, Soft or Off.

OPERATING CONTROLS

START

Press START to start your washer after a cycle has been selected. Be sure all desired Modifiers and Options have been selected. The lid must be closed for the washer to start.

PAUSE/CANCEL

Press PAUSE/CANCEL once to pause or stop the washer at any time. Press PAUSE/CANCEL once to unlock the lid and add a garment.

Press START to complete the cycle from where it was stopped. Press PAUSE/CANCEL twice to turn off the washer.

LID LOCK

When the Lid Lock status light glows, the washer lid is locked.

NOTE: You must wait until the lid lock light turns off before the lid can be opened.

POWER

Press POWER to turn the washer on or off. The washer shuts off automatically after 5 minutes following the completion of a cycle.

NORMAL SOUNDS

Your new washer may make sounds your old one didn't. Because the sounds might be unfamiliar, you may be concerned about them. These sounds are normal.

DURING WASHING

If you select the Deep Clean option, you will hear a spin/spray noise at the start of the cycle.

DURING DRAIN

If water is drained quickly from your washer (depending on your installation), you may hear air being pulled through the pump during the end of draining.

DURING WASH AND SPIN

This washer does not have a transmission. The motor provides direct drive for agitation and spin. You will hear sounds that are different from those of a conventional washer.

WASHER CARE

CLEANING YOUR WASHER

WASHER MAINTENANCE PROCEDURE

This washer has a special cycle that uses higher water volumes in combination with liquid chlorine bleach to thoroughly clean the inside of the washing machine.

NOTES:

- Read these instructions completely before beginning the cleaning process.
- It is recommended that you allow the cleanout cycle to complete without interruptions. If necessary, the cleanout cycle may be interrupted by pressing the Power button once or the PAUSE/CANCEL button twice.

  IMPORTANT: If the cleanout cycle is interrupted, run a Rinse & Spin cycle to ensure that all remaining bleach is rinsed from the washer.

Begin procedure

1. Open the washer lid and remove all items from the washer.
2. Add liquid chlorine bleach to the bleach dispenser.
   - Add 1 cup (250 mL) liquid chlorine bleach to the bleach dispenser.

     NOTE: Do not add any detergent to this cleaning cycle. Use of more than 1 cup (250 mL) of bleach will cause product damage over time.
3. Close the lid.
4. Press POWER.
5. Turn cycle control knob to CLEAN WASHER cycle.
   - The Estimated Time Remaining display will show approximately 60 minutes.
6. Press START.
   - The cycle will begin and water will dispense in the washer for a moment and pause, then the lid will lock and the cycle will continue.
   - Once the cleaning cycle has begun, allow the cycle to complete. An estimated cycle time will appear on the display.
   - If the procedure does not sufficiently improve the machine freshness, evaluate your installation and usage conditions for other causes.

Always do the following to maintain washer freshness

- Use only High Efficiency (HE) detergent.

Cleaning the exterior

Use a soft damp cloth or sponge to wipe up any spills. Occasionally wipe the outside of your washer to keep it looking new. Use mild soap and water. Do not use abrasive products.

WATER INLET HOSES

Replace inlet hoses after 5 years of use to reduce the risk of hose failure. Periodically inspect and replace inlet hoses if bulges, kinks, cuts, wear or leaks are found.

When replacing your inlet hoses, mark the date of replacement on the label with a permanent marker.

VACATION, STORAGE, AND MOVING CARE

Install and store your washer where it will not freeze. Because some water may stay in the hoses, freezing can damage your washer. If storing or moving your washer during freezing weather, winterize it.

Non-use or vacation care:

Operate your washer only when you are at home. If you will be on vacation or not using your washer for an extended period of time, you should:

- Unplug washer or disconnect power.
- Turn off the water supply to the washer. This helps avoid accidental flooding (due to a water pressure surge) while you are away.

To winterize washer:

1. Shut off both water faucets.
2. Disconnect and drain water inlet hoses.
3. Put 1 qt (1 L) of R.V.-type antifreeze in the basket.
4. Run washer on the Rinse & Spin setting for about 30 seconds to mix the antifreeze and remaining water.
5. Unplug washer or disconnect power.

To use washer again:

1. Flush water pipes and hoses. Reconnect water inlet hoses. Turn on both water faucets.

⚠ WARNING

Electrical Shock Hazard

Plug into a grounded 3 prong outlet.

Do not remove ground prong.

Do not use an adapter.

Do not use an extension cord.

Failure to follow these instructions can result in death, fire, or electrical shock.

2. Plug in washer or reconnect power.
3. Run the washer through the Bulky Items cycle to clean the washer and remove the antifreeze, if used. Use only HE High Efficiency detergent. Use 1/2 the manufacturer's recommended amount for a medium sized load.

To transport the washer:

1. Shut off both water faucets.
2. Disconnect and drain water inlet hoses.
3. If the washer will be moved during freezing weather, put 1 qt (1 L) of R.V.-type antifreeze in the basket. Run washer on the Rinse & Spin setting for about 30 seconds to mix the antifreeze and remaining water.
4. Disconnect the drain from the drain system.
5. Unplug the power cord.
6. Place the inlet hoses into the basket.
7. Drape the power cord and drain hose over edge into the basket.
8. Place foam packing ring from the original shipping materials in the top of washer. If you do not have the original foam packing ring, place heavy blankets, towels, etc. into basket opening. Close the lid and put a piece of tape over the lid and down to the front of the washer.

Reinstalling the washer

1. Follow the "Installation Instructions" to locate, level and connect the washer.
2. Run the washer through the Bulky Items cycle to clean the washer and remove the antifreeze, if used. Use only HE High Efficiency detergent. Use 1/2 the manufacturer's recommended amount for a medium sized load.

TROUBLESHOOTING

WASHER AND COMPONENTS

Washer displaying code messages

- **"*LF*" (Washer is taking too long to fill)**

  Check the following:

  Are the water inlet hoses kinked or clogged?

  Are the water inlet valve screens clear?

  Are both water faucets turned on?

  Is the drain hose sticking too far into the standpipe (siphoning)?

  Is the pressure transducer hose kinked or dislodged?

  Press PAUSE/CANCEL to clear display.

- **"*Ld*" (Washer is taking too long to drain water from the wash tub)**

  Check the following:

  Is the drain hose kinked or clogged?

  Is the drain hose installed properly? See "Connect the Drain Hose." Press PAUSE/CANCEL to clear display.

- **"*uL*" (Unbalanced Load)**

  If the load is unbalanced, the washer will display this code while running an imbalanced load correction routine at the end of the wash cycle and before the final spin. If the code remains and the wash cycle dial is flashing after the recovery routine has stopped, open lid and redistribute the load. Close lid and press START.

- **"*oL*" (Over Load)**

  Is the washer overloaded? The washer has attempted to fill and begin the wash cycle. If the washer is overloaded, it will drain any water and detergent that was added during the fill. To correct the overload, remove several items and add detergent. Close lid and press START.

- **"*Sd*" (Suds Detected)**

  Did you use regular detergent?

  Regular or hand-washing detergents are not recommended for this washer. Use only High Efficiency ("HE") detergent.

  Did you add too much detergent?

  Always measure detergent. Follow detergent manufacturer's directions.

  If excessive suds are detected, the washer will display this code while running a suds reduction correction routine at the end of the wash cycle. The suds reduction routine removes extra suds and assures proper rinsing of your garments. If the code remains and the wash cycle dial is flashing after the recovery routine has stopped, re-select your desired cycle using cold water. Press START. Do not add detergent.

- **"*lid*" (Lid Opened)**

  Is the lid open?

  Close the lid to clear the display. If the lid remains open for more than 10 minutes, water in the wash tub will drain.

- **"*HC*" (Cold and Hot hoses switched)**

  This code will appear at the end of the wash cycle to indicate that the cold and hot water inlet hoses are switched. See "Connect the Inlet Hoses."

- **"*dL*" (Door/Lid cannot lock)**

  Indicates lid is not locked. Check for items caught in the lid keeping it from closing. Press PAUSE/CANCEL once to clear the code.

- **"*dU*" (Door/Lid cannot unlock)**

  Is there excessive weight on the lid, such as a basket of laundry? Excessive weight will keep the lid from unlocking. Press PAUSE/CANCEL once to clear the code.

- **F _ _ "*F##*" code**

  Press PAUSE/CANCEL once to clear code. Press START. If code appears again, call for service.

Noisy, vibrating, off-balance

- **Is the washer level? Does the washer rock when pushed against the corners?**

  The washer must be level. The front and rear feet must be in firm contact with the floor. Check that the locknuts are tightened. See "Level the Washer."

- **Is the floor flexing, sagging or not level?**

  Flooring that flexes or is uneven can contribute to noise and vibration of the washer. A 3/4˝ (1.9 cm) piece of plywood under the washer will reduce the sounds. See "Location Requirements."

- **Is the load balanced?**

  Evenly distribute the load in the washer basket and make sure the height of the load does not exceed the top row of basket holes. See "Starting The Washer."

- **Do you hear clicking or other noises when the cycle changes from washing to draining or spinning?**

  When the drive system shifts or the washer basket settles between cycles you may hear noises that are different from your previous washer. These are normal washer noises.

- **Is the washer gurgling or humming?**

  When the washer drains, the pump will make a continuous humming with periodic gurgling or surging sounds as the final amounts of water are removed. This is normal.

- **Are you washing a small load?**

  You will hear more splashing sounds when washing small loads. This is normal.

- **The washer basket moves while washing.**

  This is normal.

- **Can you hear water spraying?**

  This is part of the wash action.

- **Are you washing items with metal snaps, buckles or zippers?**

  You may hear metal items touching the basket. This is normal.

- **Did you select the Bulky Items cycle?**

  Use the Bulky Items cycle only for oversized, nonabsorbent items such as comforters, pillows or poly-filled jackets. Other items will create an unbalanced load in this cycle.

Washer leaks

- **Are the fill hoses tight?**

- **Are the fill hose washers properly seated?**

  Check both ends of each hose. See "Connect the Inlet Hoses."

- **Did you pull the drain hose from the washer cabinet and install it in a standpipe or laundry tub?**

  The drain hose should be pulled from the washer cabinet and secured to the drainpipe or laundry tub. See "Connect Drain Hose" and "Secure the Drain Hose."

- **Is the sink or drain clogged?**

  Sink and drainpipe must be able to carry away 17 gal. (64 L) of water per minute. If sink or drainpipe is clogged or slow, water can back up out of drainpipe or sink.

- **Is water splashing off the tub ring or the load?**

  The wash load should be balanced and not overloaded. If the wash load is unbalanced or overloaded, incoming water can deflect off the load.

- **Is the washer properly installed?**

  The washer must be level. The feet should be properly installed and the nuts tightened. See "Level the Washer."

- **Was the cycle interrupted and then the Deep Clean option selected?**

  The Deep Clean option should be started on a dry load only. The Deep Clean option should not be selected after the tub has started filling with water.

- **Did you select Deep Clean option and use a handwashing detergent?**

  Regular or handwashing detergents are not recommended for this washer. Use only High Efficiency ("HE") detergent.

Dispenser operation

- **Are the laundry additives in the correct dispensers?**

  Add the correct amounts of detergent (powdered or liquid), liquid chlorine bleach, or fabric softener to the correct dispenser. You can add powdered or liquid color-safe bleach to the detergent dispenser. Be sure to match powdered color-safe bleach with powdered detergent or match liquid color-safe bleach with liquid detergent. Use only liquid chlorine bleach in the bleach dispenser.

- **Is there water remaining in the bottom of a dispenser? Did the dispenser drain properly?**

  A small amount of water may be left in a dispenser at the end of the cycle. This is normal.

WASHER OPERATION

⚠ WARNING

Electrical Shock Hazard

Plug into a grounded 3 prong outlet.

Do not remove ground prong.

Do not use an adapter.

Do not use an extension cord.

Failure to follow these instructions can result in death, fire, or electrical shock.

Washer won't fill, rinse or agitate; washer stops

- **Is the power cord plugged into a grounded 3 prong outlet?**

  Plug power cord into a grounded 3 prong outlet.

- **Are you using an extension cord?**

  Do not use an extension cord.

- **Is there power at the plug?**

  Check electrical source or call electrician.

- **Is the indicator on the Cycle control knob properly lined up with a cycle?**

  Turn the Cycle control knob to the right slightly.

- **Are the water inlet valve screens clogged?**

  Turn off the water and remove inlet hoses from the washer. Remove any accumulated film or particles. Reinstall hoses, turn on water and check for leaks.

- **Are the hot and cold water faucets turned on?**

  Turn on the water.

- **Is the water inlet hose kinked?**

  Straighten the hoses.

- **Does the water level seem too low, or does the washer appear to not fill completely?**

  The Auto Water Level feature senses the size of the load and adds the correct amount of water for the load size. You may notice during a cycle that the wash load is not completely submerged in water. This is normal and necessary for clothes to move.

- **Has a household fuse blown, or has a circuit breaker tripped?**

  Replace the fuse or reset the circuit breaker. If the problem continues, call an electrician.

- **Is the washer in a normal pause in the cycle?**

  The washer may pause during certain cycles. Allow the cycle to continue.

- **Is the washer overloaded?**

  Wash smaller loads. See “Starting The Washer” for maximum load size.

- **Is there oversudsing?**

  Cancel the current cycle. Select DRAIN & SPIN to drain the load. Re-select your desired cycle and press START. Do not add detergent. Use cold water.

- **Is the lid open?**

  The lid must be closed during operation. The washer will not operate with the lid open.

- **Did you add more items to the load once the washer started?**

  Once the load is wet, there may appear to be space for more items. Do not add more than 1 or 2 garments after the cycle has started. For best results determine load size with dry items only.

Washer continues to fill or drain, or the cycle seems stuck

- **Is the top of drain hose lower than the control knobs on washer?**

  The top of the drain hose must be at least 39˝ (99 cm) above the floor. See “Drain System.”

- **Does the drain hose fit too tightly in the standpipe, or is it taped to the standpipe?**

  The drain hose should be loose yet fit securely. Do not seal the drain hose with tape. The hose needs an air gap. See “Installation Instructions.”

Washer won’t drain or spin; water remains in washer

- **Is the drain hose clogged, or the end of the drain hose more than 96˝ (244 cm) above the floor?**

  See “Drain System.”

- **Is the lid open?**

  The lid must be closed during operation. The washer will not operate with the lid open.

- **Is there excessive sudsing?**

  Always measure detergent. Follow detergent manufacturer’s directions. If you have very soft water, you may need to use less detergent. Use only High Efficiency (“HE”) detergent.

Wash/Rinse temperature

- **Are the hot and cold water inlet hoses reversed?**

  If the hot and cold water inlet hoses are reversed, the washer will display an “HC” error code at the end of the cycle. See “Connect the Inlet Hoses.”

- **Are you washing many loads?**

  As your frequency of loads washed increases, the water temperature may decrease for hot and warm temperatures. This is normal.

- **Do you have an ENERGY STAR® qualified washer?**

  The wash water temperatures may feel cooler to you than those of your previous washer. This is normal.

- **Does the wash water temperature feel lower than usual?**

  As washing progresses, the wash temperature will decrease slightly for hot and warm washes. This is normal.

  To reduce wrinkling, the warm rinse is regulated to be cooler than the warm wash.

Excessive sudsing

- **Did you use a non-HE detergent?**

  Regular or handwashing detergents are not recommended for this washer. Use only High Efficiency (“HE”) detergent.

- **Is there excessive sudsing?**

  Always measure detergent. Follow detergent manufacturer's directions. If you have very soft water, you might need to use less detergent.

- **Was the cycle interrupted and then the Deep Clean option selected?**

  The Deep Clean option should be started on a dry load only. The Deep Clean option should not be selected after the tub has started filling with water.

Cycle did not run Deep Clean option

- **Did you select the Deep Clean option?**

  The Deep Clean option must be selected for it to be included in a wash cycle. The Deep Clean option should be started on a dry load only. Deep Clean should not be selected after the tub has started filling with water.

  The Deep Clean option is a default in the Heavy Duty cycle and may be added to other cycles.

CLOTHING CARE

Load too wet

- **Did you use the right cycle for the load being washed?**

  Select a higher spin speed.

- **Did you use a cold rinse?**

  Cold rinses leave loads wetter than warm rinses. This is normal.

- **Did you wash an extra large load?**

  A large unbalanced load could result in a reduced spin speed and wet clothes at the end of the cycle. Evenly distribute the load and make sure the height of the load does not exceed the top row of basket holes.

Residue or lint on load

- **Did you add detergent to the dispenser?**

  For best results, use the dispenser to dissolve the detergent.

- **Did you sort properly?**

  Sort lint givers (towels, chenille) from lint takers (corduroy, synthetics). Also sort by color.

- **Did you overload the washer?**

  The wash load must be balanced and not overloaded. Clothes should move freely. Lint or powdered detergent can be trapped in the load if the washer is overloaded. Wash smaller loads. See "Starting The Washer" for maximum load size.

- **Did you use enough detergent?**

  Follow detergent manufacturer's directions. Use enough detergent to hold the lint in the water.

- **Did you line dry your clothing?**

  If so, you can expect some lint on the clothing. The air movement and tumbling of a dryer removes lint from the load.

- **Was paper or tissue left in pockets?**
- **Is your water colder than 60°F (15.6°C)?**

  Wash water colder than 60°F (15.6°C) may not completely dissolve the detergent.

- **Did you use the proper Soil Level and Wash Cycle for the load?**

  Reducing wash time (duration) and wash speed are ways to reduce lint.

- **Did you add detergent to the dispenser?**

  For best results, use the dispenser to dissolve the detergent.

Load is wrinkled, twisted or tangled

- **Did you unload the washer promptly?**

  Unload the washer as soon as it stops.

- **Did you use the right cycle for the load being washed?**

  To reduce wrinkling, tangling and twisting, select a cycle with low wash and spin speeds, such as Delicate/Handwash or Casual/Perm Press.

- **Did you overload the washer?**

  The wash load must be balanced and not overloaded. Loads should move freely during washing to reduce wrinkling, tangling and twisting.

- **Was the wash water warm enough to relax wrinkles?**

  If safe for the load, use warm or hot wash water. Use cold rinse water.

- **Are the hot and cold water hoses reversed?**

  Check that the hot and cold water hoses are connected to the correct faucets. If the hot and cold water inlet hoses are reversed, the washer will display an “HC” error code at the end of the cycle. See “Connect the Inlet Hoses.” A hot rinse followed by spin will cause wrinkling.

Stains, gray whites, dingy colors

- **Did you properly sort the load?**

  Dye transfer can occur when mixing whites and colors in a load. Sort dark clothes from whites and lights.

- **Was the wash temperature too low?**

  Use hot or warm washes if safe for the load. Make sure your hot water system is adequate to provide a hot water wash.

- **Did you use enough detergent, or do you have hard water?**

  Use more detergent for washing heavy soils in cold or hard water. Water temperature should be at least 60°F (15.6°C) for soap to dissolve and work properly. For best performance, use the detergent manufacturer’s recommended amounts.

- **Did you follow the manufacturer’s directions when adding detergent and fabric softener?**

  Measure detergent and fabric softener. Use enough detergent to remove soil and hold it in suspension. Dilute fabric softener and add to the rinse portion of a cycle only. Do not drip fabric softener onto clothes.

- **Is there above average iron (rust) in water?**

  You may need to install an iron filter.

- **Did you add detergent to the dispenser?**

  For best results, use the dispenser to dissolve the detergent.

- **Did you add fabric softener directly to the load?**

  Use your fabric softener dispenser. Do not drip fabric softener onto clothes.

- **Did you use a fabric softener dispensing ball?**

  Use the fabric softener dispenser provided with the washer. Dispensing balls will not operate correctly with this washer.

- **Did you unload the washer promptly?**

  To avoid dye transfer, unload the washer as soon as it stops.

- **Did you add detergent, chlorine bleach or fabric softener too late in the cycle?**

  Detergent, chlorine bleach, and fabric softener should be added to the dispensers before starting the washer.

- **Did you use Quick Wash on a large load?**

  Quick Wash is designed to wash only a few items for best results.

Garments damaged

- **Were sharp items removed from pockets before washing?**

  Empty pockets, zip zippers, snap or hook fasteners before washing to avoid snagging and tearing of load.

- **Were strings and sashes tied to avoid tangling?**

  Straps and strings can easily become entangled in the load, causing strain on seams and tearing.

- **Were items damaged before washing?**

  Mend rips and broken threads in seams before washing.

- **Did you overload the washer?**

  The wash load must be balanced and not overloaded. Loads should move freely during washing.

- **Did you add chlorine bleach properly?**

  Do not pour chlorine bleach directly onto load. Wipe up bleach spills. Undiluted bleach will damage fabrics. Do not place load items on top of the bleach dispenser when loading and unloading the washer (on some models). Do not use more than the manufacturer's recommended amount for a full load.

- **Did you follow the garment manufacturer's care label instructions?**

COMPONENT ACCESS

This section instructs you on how to service each component inside the Cabrio™ Automatic Washer With 6th Sense™ Technology. The components and their locations are shown below.

COMPONENT LOCATIONS

CONSOLE & TOP CABINET COMPONENTS

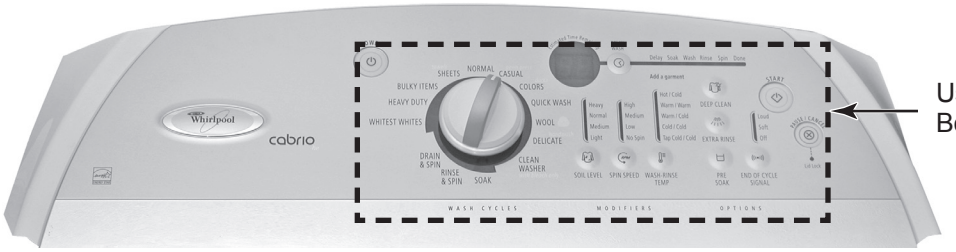

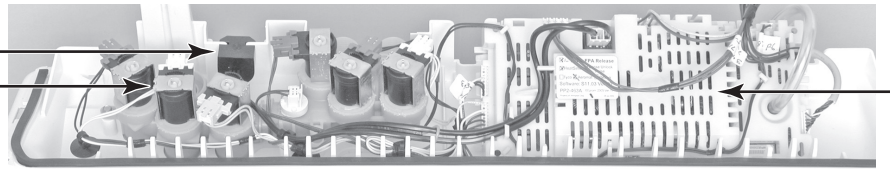

DISPENSER & BASKET COMPONENTS

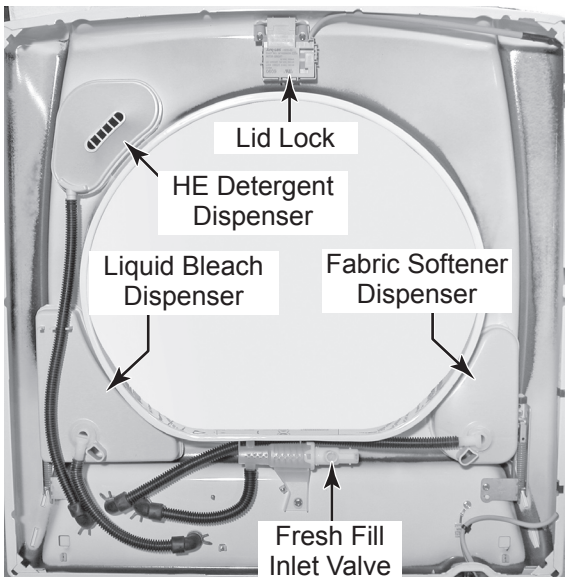

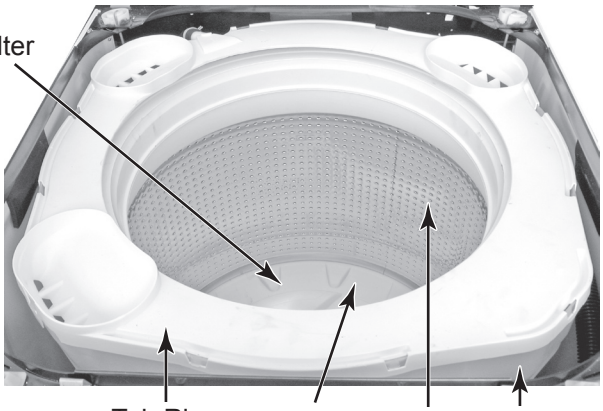

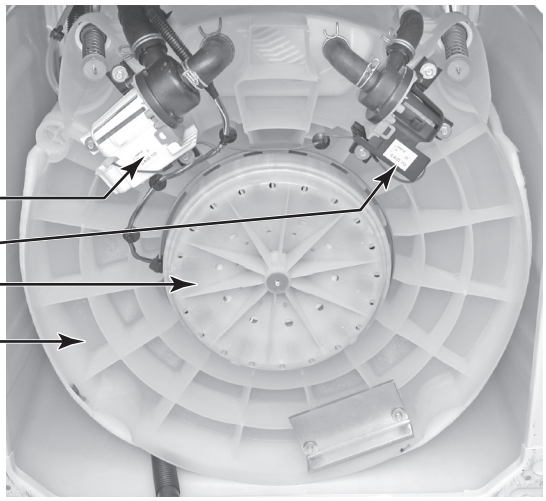

BOTTOM COMPONENTS

REMOVING THE ENCODER AND THE USER INTERFACE BOARD

⚠ WARNING

Electrical Shock Hazard

Disconnect power before servicing.

Replace all parts and panels before operating.

Failure to do so can result in death or electrical shock.

1. Unplug washer or disconnect power.
2. Remove the three hex-head mounting screws from the rear of the console.

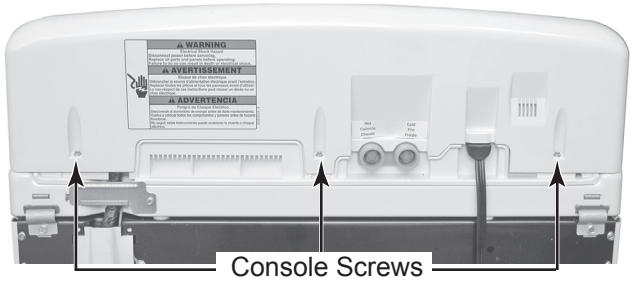

3. Lift the console off the cabinet and disconnect the user interface board cable connector at machine/motor control connector P11.

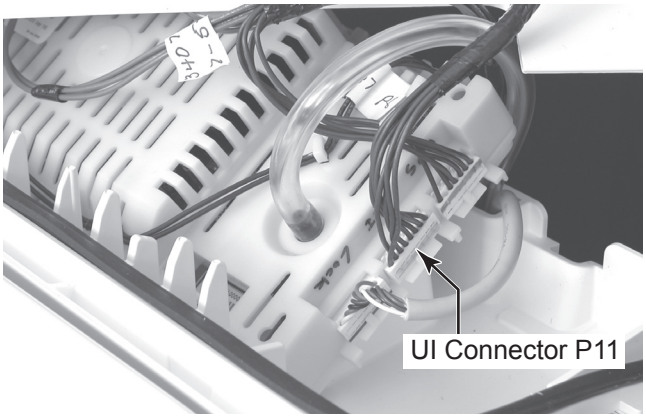

4. Pull the knob off the control shaft.

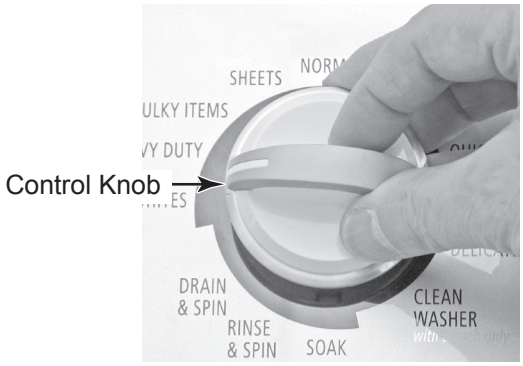

5. Unhook the user interface (UI) wire harness from the cover clips.
6. Remove the three screws from the UI board cover.
7. Using a flat-blade screwdriver, pry the two locking tabs out, and unclip and remove the UI cover from the console.

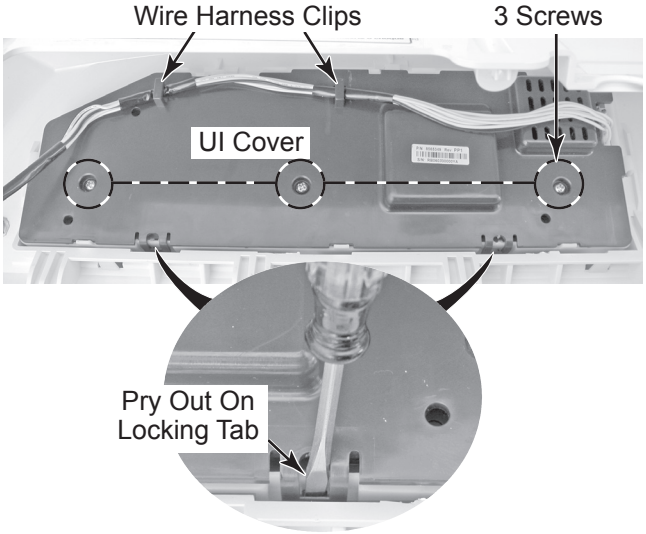

8. **To remove the encoder,** lift the locking tab and turn the encoder to the left (counterclockwise) as far as it will go, then lift the encoder straight up so that the shaft slides out of the rubber console seal, and remove it from the console. **NOTE:** Do not flex the encoder ribbon cable wires at the user interface board or they could break.

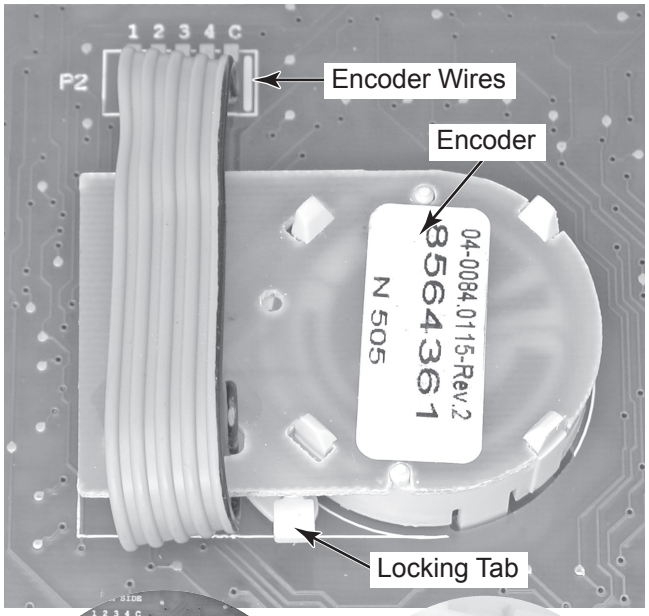

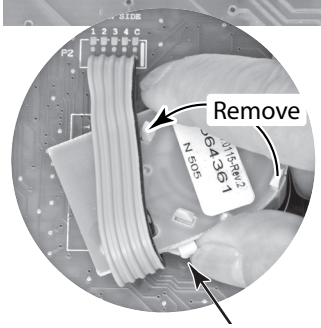

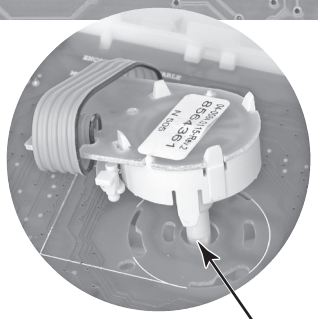

NOTE: Before you can remove the user interface board, you must first remove the encoder.

9. **To remove the user interface board:**
   a) Remove the encoder (see step 8).
   b) Using a flat-blade screwdriver, carefully pry the front edge of the user interface board up, then pull the board forward, and remove it from the console.

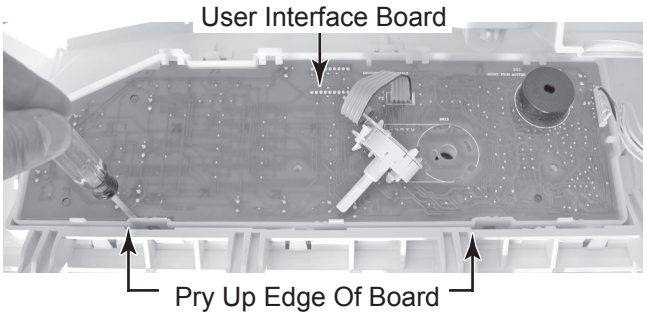

REASSEMBLY NOTE: When you reinstall the encoder, make sure that the rubber seal does not become dislodged when installing the encoder shaft, or else water can leak into the console area.

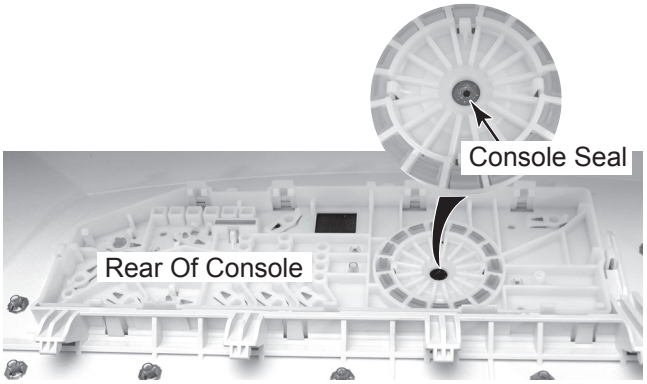

REMOVING THE WATER INLET/ DISPENSER VALVE ASSEMBLY, POWER SUPPLY CORD, AND MACHINE/MOTOR CONTROL & PRESSURE TRANSDUCER

⚠ WARNING

Electrical Shock Hazard

Disconnect power before servicing.

Replace all parts and panels before operating.

Failure to do so can result in death or electrical shock.

1. Unplug washer or disconnect power.
2. Turn off water supply.
3. Remove the console from the top of the washer (see step 2 on page 4-2 for the procedure).

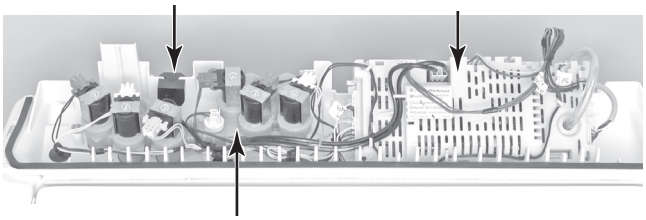

4. **To remove the water inlet/dispenser valve assembly (see the top right photo):**
   a) Disconnect the hot and cold water hoses from the water inlets.
   b) Release the locking tab and disconnect the wire connectors from the water inlet/dispenser valve assembly solenoid terminals.
   c) Release the locking tab and disconnect the wire connector from the thermistor.

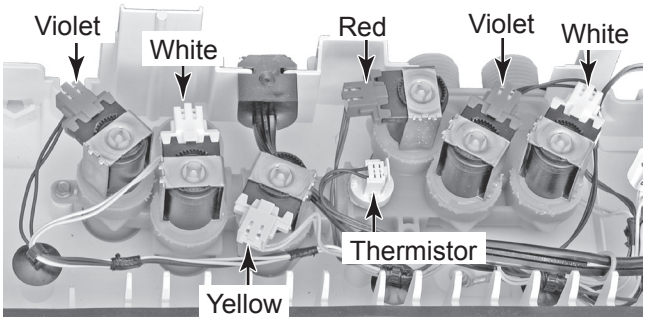

Water Inlet/Dispenser Valve Assembly

   d) Tape the washer lid closed.
   e) Using a putty knife, press and unlock the two front top locks. The locks are approximately 6-1/2″ from the outside edge of the washer.

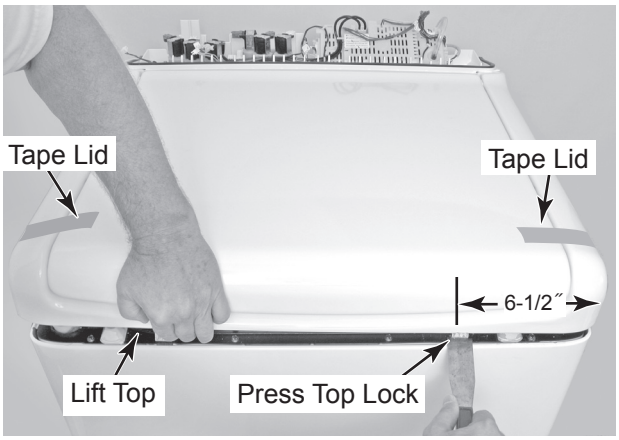

f) Loosen the clamps and remove the four hoses going to the water inlet/dispenser valve assembly.

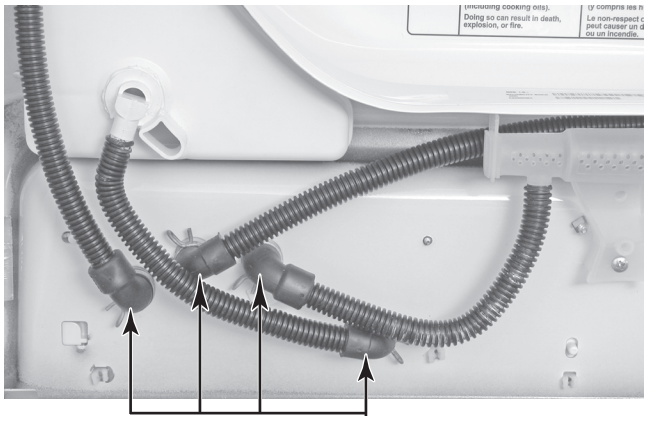

Water Inlet/Dispenser Valve Hoses

g) Lower the cabinet top.

h) Slide the power supply cord strain relief out of the housing and move it away from the valve assembly.

i) Remove the two hex-head screws from the water inlet/dispenser valve assembly, and remove the assembly from the washer.

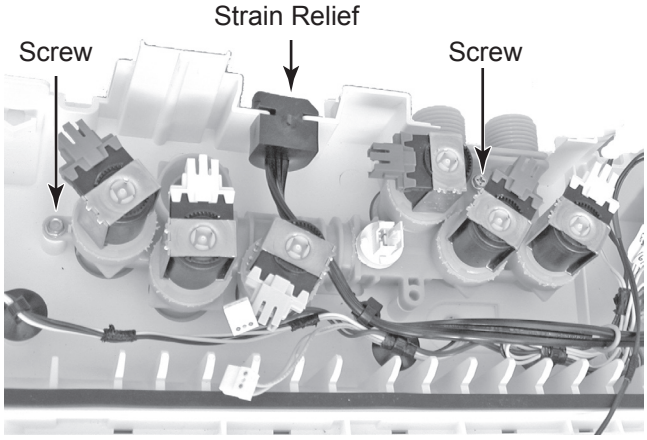

Water Inlet/Dispenser Valve Assembly

5. **To remove the power supply cord:**

a) Disconnect the power supply cord connector from the machine/motor control.

b) Remove the hex-head screw from the green ground wire.

c) Slide the power supply cord strain relief out of the housing and remove the cord.

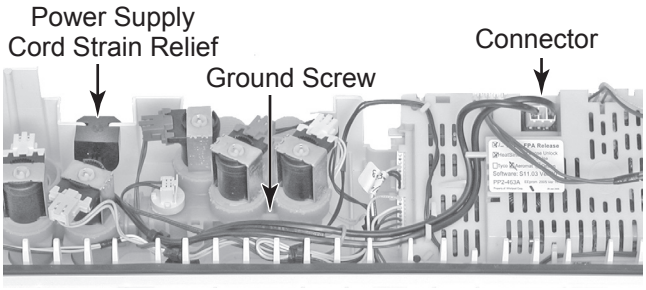

6. **To remove the machine/motor control & pressure transducer:**

a) Disconnect the nine wire connectors from the control.

b) Pull the pressure transducer tube off the fitting on the control.

c) Remove the hex-head mounting screw.

d) Lift the front of the control, slide it out from under the clips at the back, and remove it.

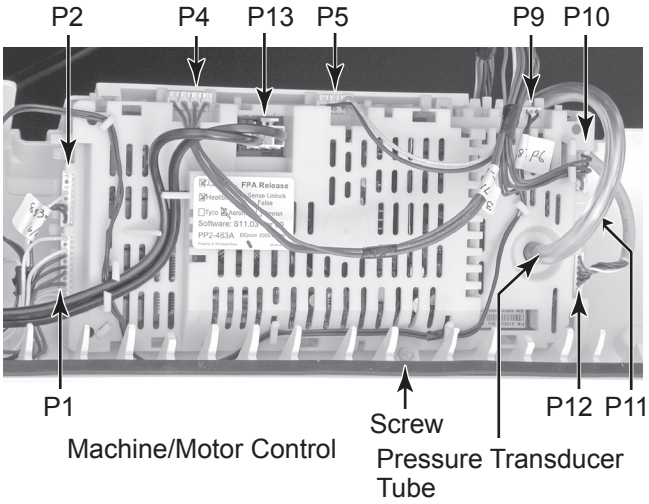

REMOVING A DISPENSER, THE FRESH FILL INLET VALVE, AND THE LID LOCK

⚠ WARNING

Electrical Shock Hazard

Disconnect power before servicing.

Replace all parts and panels before operating.

Failure to do so can result in death or electrical shock.

1. Unplug washer or disconnect power.
2. Raise the washer lid.

NOTE: The removal procedure for the three dispensers is the same so only one will be shown removed.

3. **To remove a dispenser:**

   a) Use a small screwdriver and pry out on the three dispenser cover tabs while you lift the cover off the dispenser (see the top right photo).

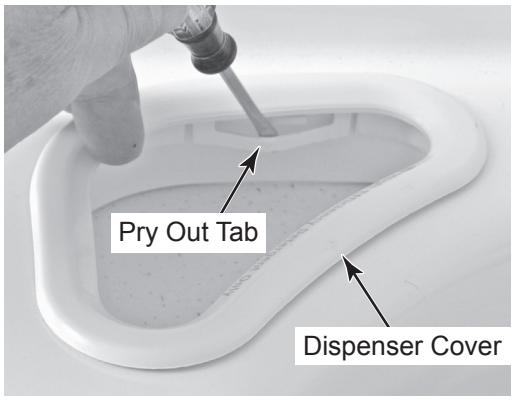

   b) Squeeze the bottom of the dispenser, and release the hooked segments at the top of the dispenser from the cabinet, then push the dispenser out of its cutout.

c) Raise the cabinet top (see step 3e on page 4-4 for the procedure).

d) Loosen the clamp and disconnect the end of the dispenser hose from its water inlet/dispenser valve connector. **NOTE:** The dispenser hoses are permanently attached to the dispenser. They are not intended to be removed.

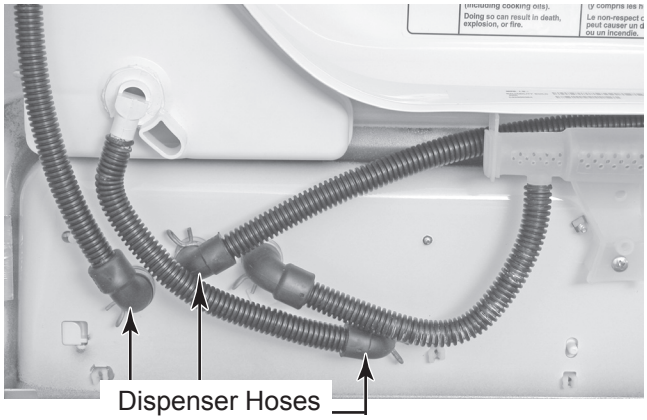

4. **To remove the fresh fill inlet valve:**

a) Raise the cabinet top (see step 3e on page 4-4 for the procedure).

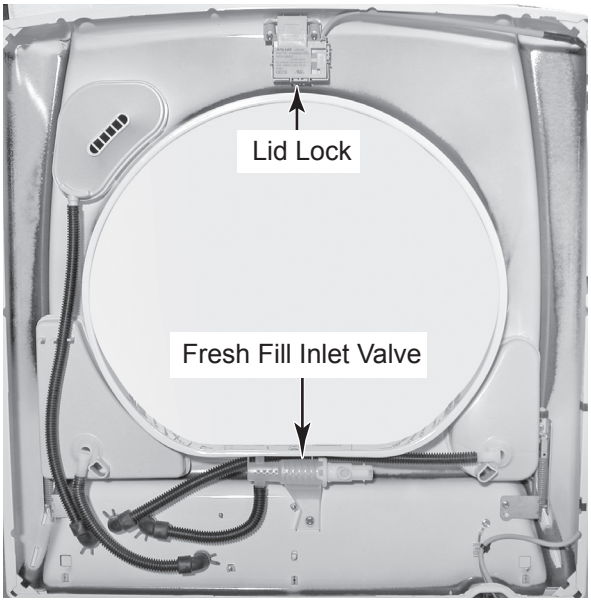

b) Loosen the clamp and disconnect the end of the fresh fill inlet valve hose from its water inlet/dispenser valve connector (see the top right photo). **NOTE:** The fresh fill inlet valve hose is permanently attached to the inlet. It is not intended to be removed.

c) Remove the screw from the fresh fill inlet valve and remove the valve assembly.

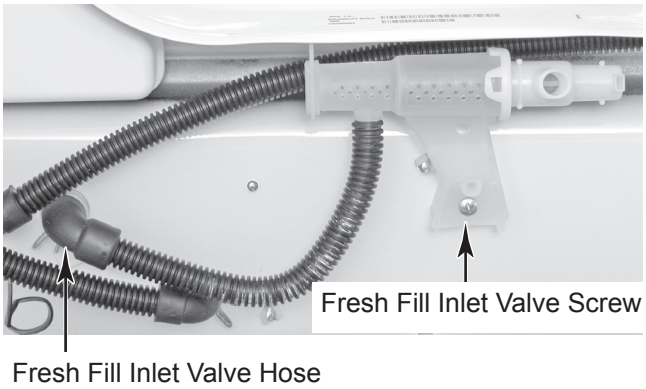

5. **To remove the lid lock:**

a) Raise the cabinet top (see step 3e on page 4-4 for the procedure).

b) Remove the two hex-head screws from the lid lock and remove the lock.

c) Cut the indicated cable standoff from the cabinet top.

d) Unclip the lid lock cable from the cabinet top flange.

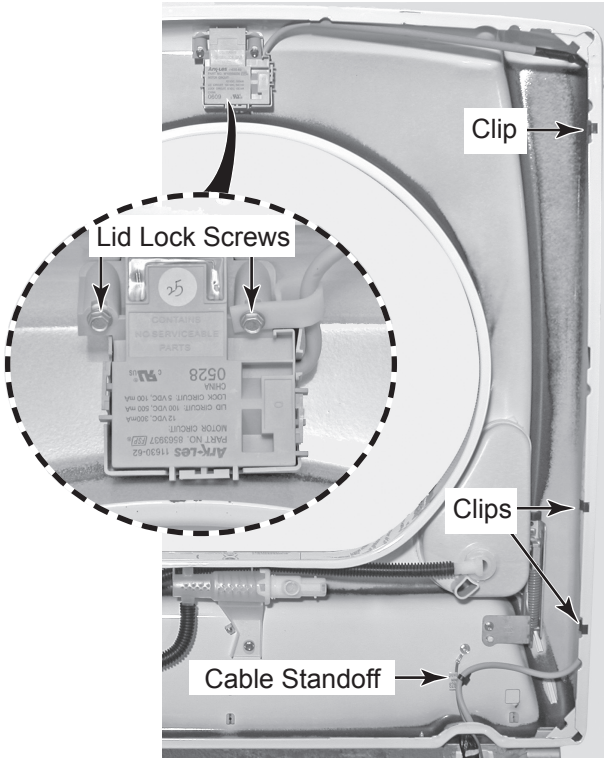

Continued on the next page.

e) Disconnect the lid lock cable connector from the machine/motor control connector at P12.

f) Pull the end of the lid lock cable from the control, and remove the lid lock and cable assembly from the washer.

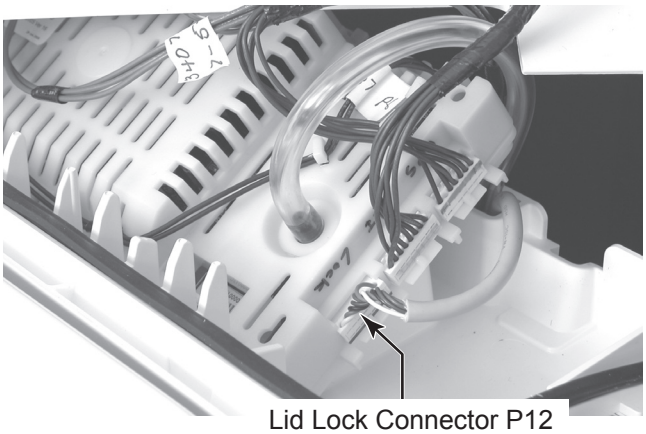

REMOVING THE LID AND A HINGE

⚠ WARNING

Electrical Shock Hazard

Disconnect power before servicing.

Replace all parts and panels before operating.

Failure to do so can result in death or electrical shock.

1. Unplug washer or disconnect power.
2. **To remove the lid:**
   a) Raise the lid and remove the two hinge pin screws from both sides.

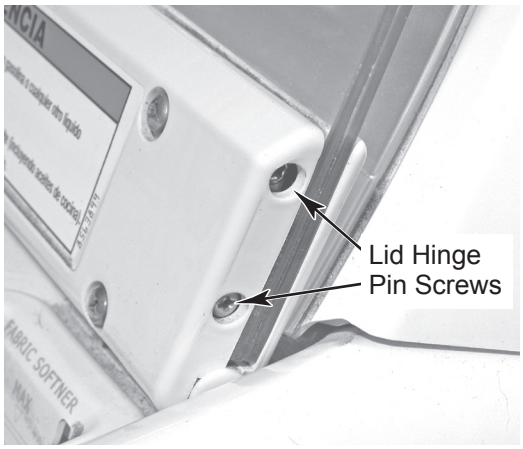

   b) Lift the lid, slide it off the hinge pins, and remove the lid from the washer.

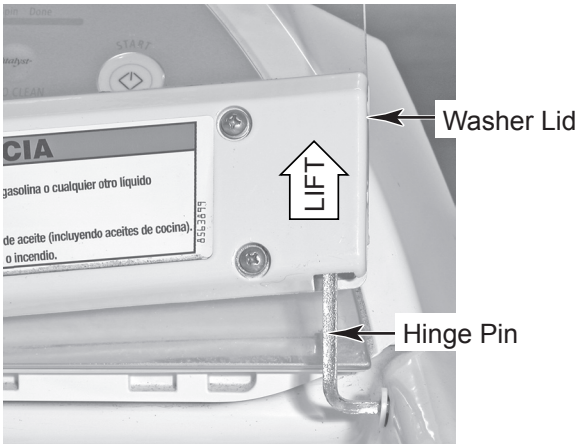

3. **To remove a hinge:**
   a) Remove the lid (see step 2).
   b) Pull the hinge pin out of the hinge you are removing.
   c) Remove the top hex-head screw from the hinge you are removing.

   d) Raise the cabinet top (see step 3e on page 4-4 for the procedure).
   e) Remove the hex-head screw from the hinge mounting bracket, and remove the hinge from the cabinet top.

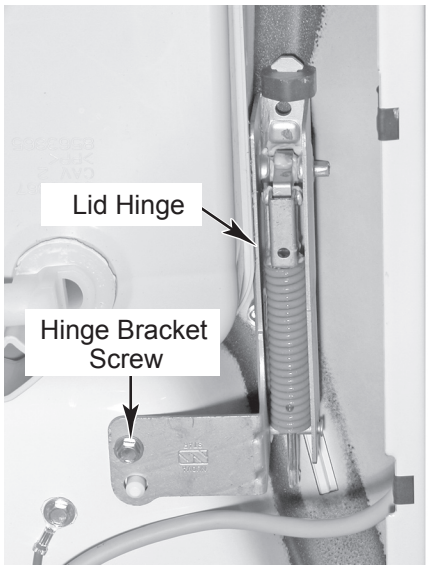

REMOVING THE BASKET, BASKET HUB, & LINT FILTER

⚠ WARNING

Electrical Shock Hazard

Disconnect power before servicing.

Replace all parts and panels before operating.

Failure to do so can result in death or electrical shock.

1. Unplug washer or disconnect power.
2. Raise the cabinet top (see step 3e on page 4-4 for the procedure).
3. **To remove the basket:**
   a) Loosen the clamp and pull the recirculation hose off the tub ring.
   b) Pry out and unsnap the tub ring tabs from the tub and remove the tub ring.

   c) Insert the blade of a small screwdriver into the slot in the impeller cap, then pry the cap up, and remove it.
   d) Remove the 7/16˝ hex-head bolt from the impeller, then lift and remove the impeller from the basket. **NOTE:** Lifting the basket will assist in removing the impeller.

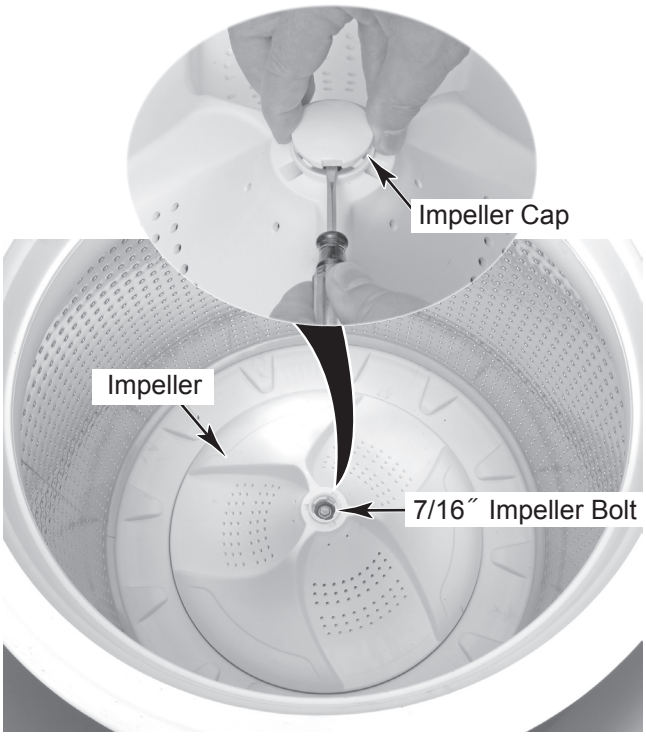

   e) Lift the basket out of the washer.

4. **To remove the basket hub,** remove the six screws, and lift the hub assembly from the basket.

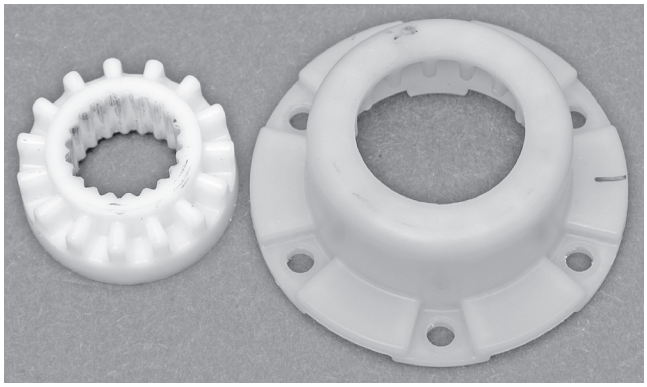

5. **To remove the lint filter,** remove the two screws, and lift the filter from the tub.

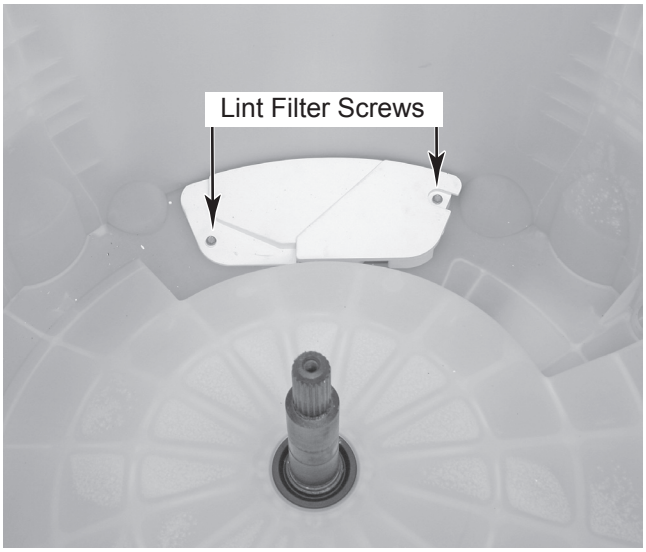

NOTE: Clean the lint from the vanes in the filter and reinstall it in the washer.

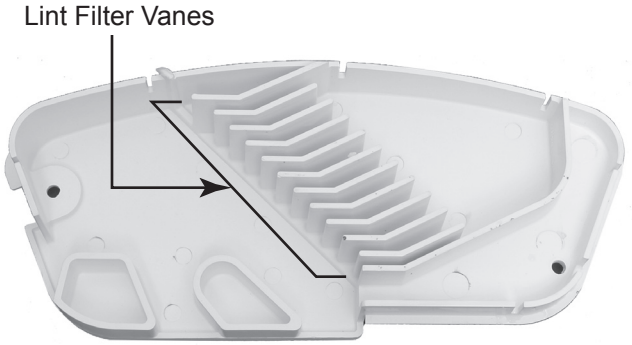

REMOVING THE DRAIN AND RECIRCULATION PUMPS

⚠ WARNING

Electrical Shock Hazard

Disconnect power before servicing.

Replace all parts and panels before operating.

Failure to do so can result in death or electrical shock.

1. Unplug washer or disconnect power.
2. Turn off the water supply to the washer.
3. Disconnect the hot and cold water hoses from the rear of the washer, and remove the end of the drain hose from the standpipe or laundry tub.
4. Tape the washer lid closed.
5. Carefully lay the washer on its front panel. Place padding on the floor to protect the surfaces.

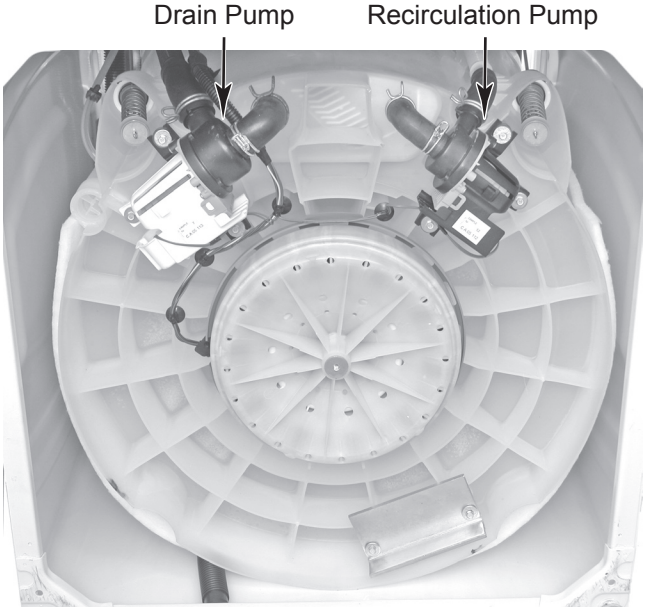

6. **To remove the drain pump:**
   a) Loosen the clamps and pull the inlet and outlet drain hoses off the pump. Note that there is a tab on the outlet connector that fits into a slot in the hose.
   b) Remove the three 5/16″ hex-head screws from the drain pump and remove the pump from the tub.

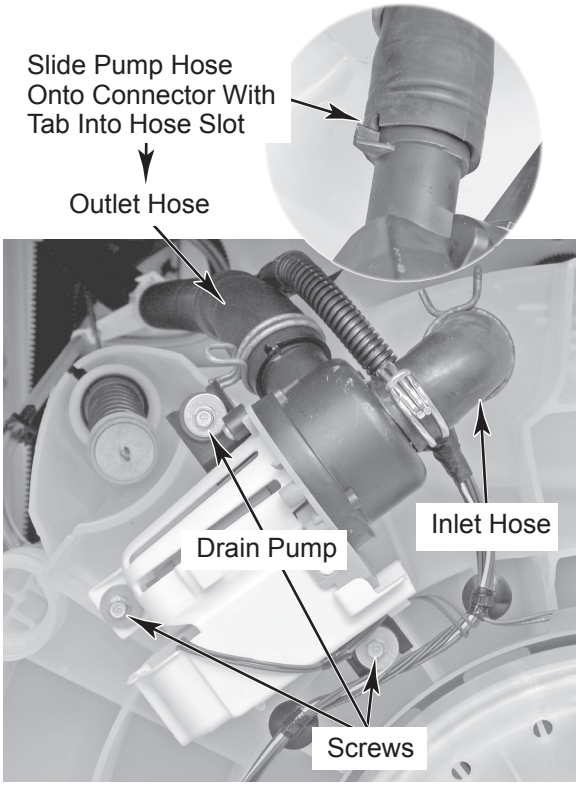

   c) Open the wire cover on the pump and disconnect the 2-wire connector from the terminals.

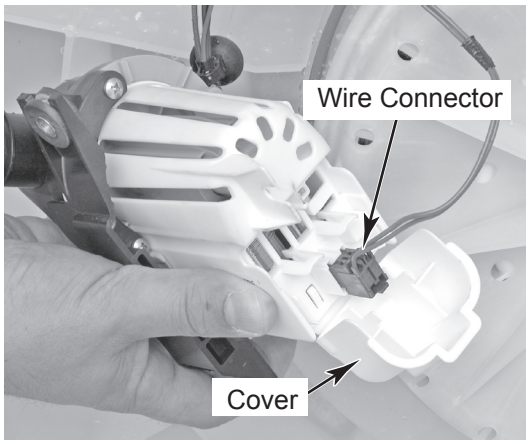

7. **To remove the recirculation pump:**

a) Loosen the clamps and pull the recirculation hoses off the pump. Note that there is a tab on the outlet connector that fits into a slot in the hose.

b) Remove the three 5/16″ hex-head screws from the recirculation pump and remove the pump from the tub.

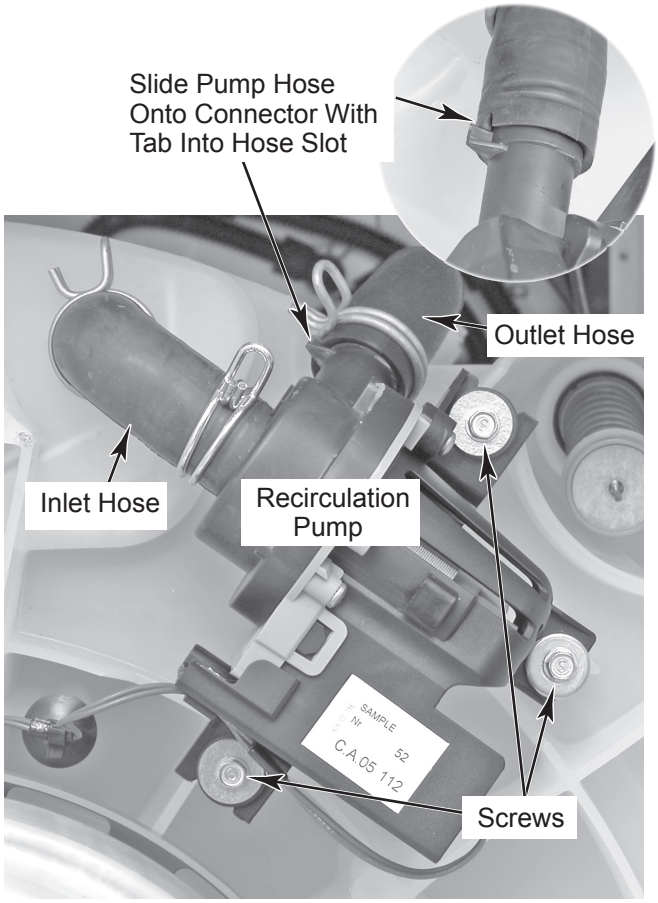

c) Disconnect the 2-wire connector from the recirculation pump terminals.

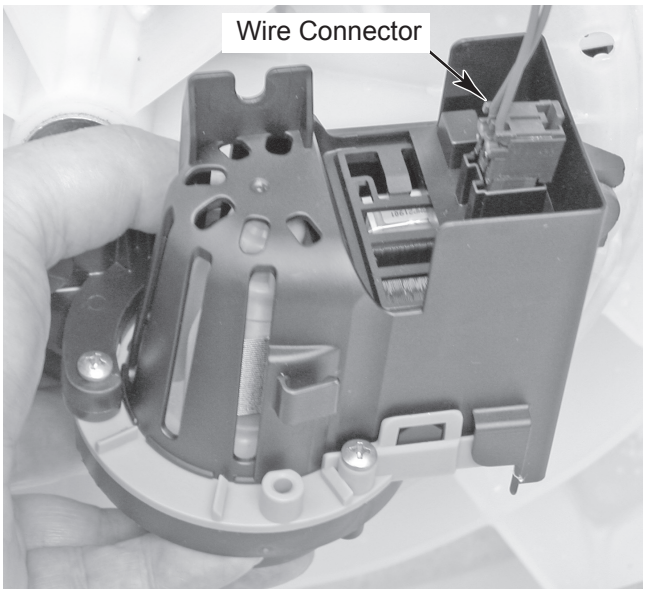

REMOVING THE DRIVE MOTOR & ROTOR POSITION SENSOR

⚠ WARNING

Electrical Shock Hazard

Disconnect power before servicing.

Replace all parts and panels before operating.

Failure to do so can result in death or electrical shock.

1. Unplug washer or disconnect power.
2. Turn off the water supply to the washer.
3. Disconnect the hot and cold water hoses from the rear of the washer, and remove the end of the drain hose from the standpipe or laundry tub.
4. Tape the washer lid closed.
5. Carefully lay the washer on its front panel. Place padding on the floor to protect the surfaces.

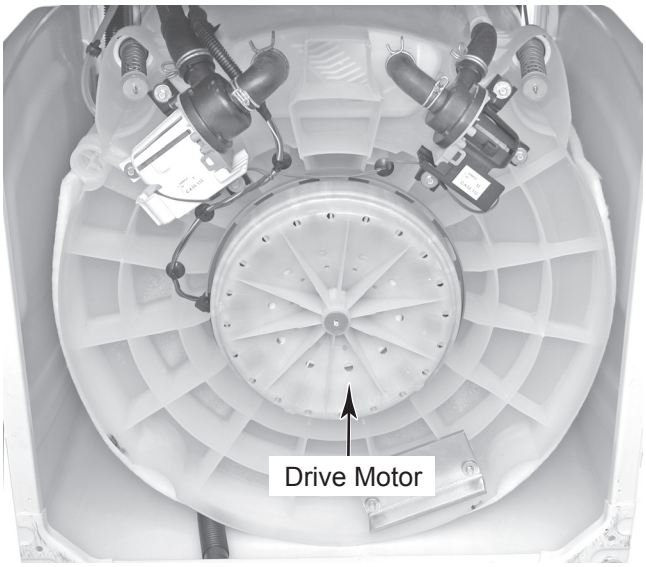

6. Use a 1/4˝ Allen wrench and loosen the rotor mounting screw as far as it will go (the screw is captive and cannot be removed from the rotor). The rotor is seated on the splined tub shaft. Rock the rotor back and forth and pull it off the shaft so it contacts the screw washer-head, then further loosen the screw. Do this until the rotor is removed from the shaft.

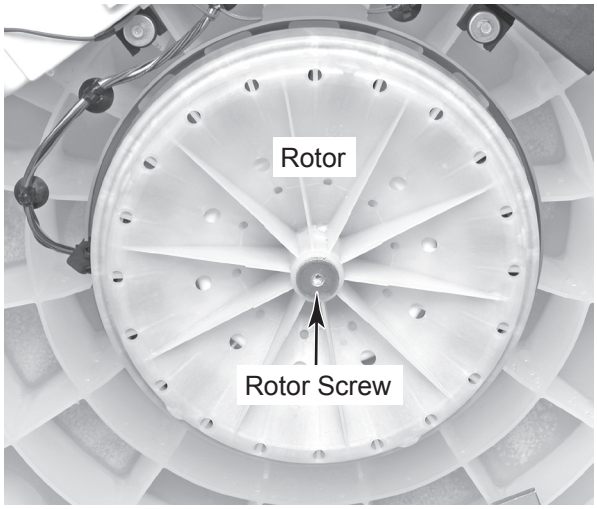

7. Pull the two wire standoffs out of the tub holes.
8. Remove the four 3/8˝ bolts from the drive motor stator assembly.
9. Pull the shield and the stator with the two round spacers (front and back) off the tub.

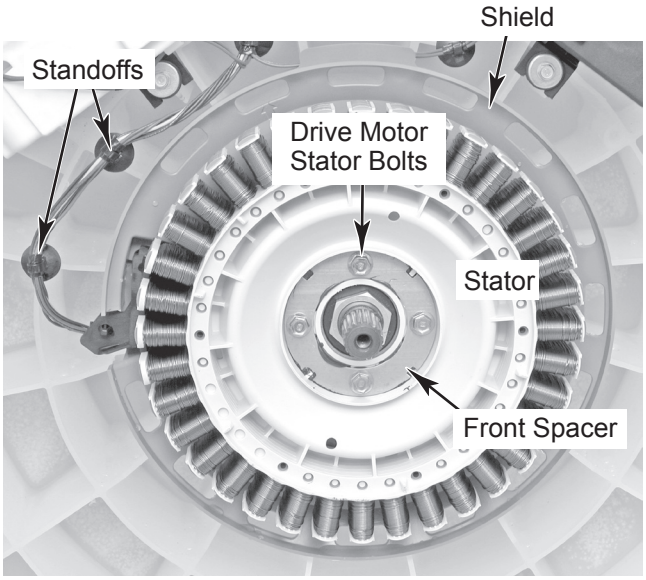

10. Disconnect the power connector from the stator terminals.
11. Disconnect the wire standoff and edge connector from the rotor position sensor cover. **NOTE:** If present, slide or cut the wire tie from around the edge connector.

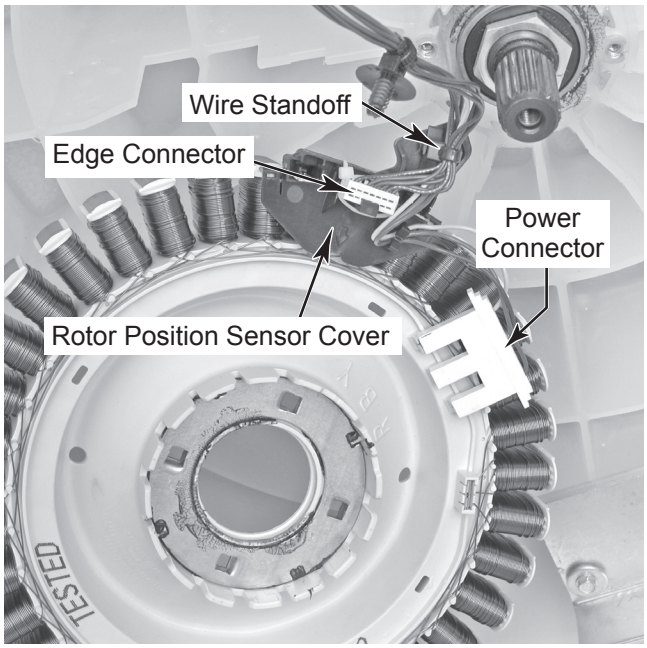

12. Pry up on the two locking tabs and pull the rotor position sensor cover off the stator housing. **NOTE:** In the top right photo, there are two indents on the housing to mark where the rotor position sensor cover is installed. Be sure to snap the two tabs on the rotor position sensor cover into these indents when you reinstall it on the stator assembly.

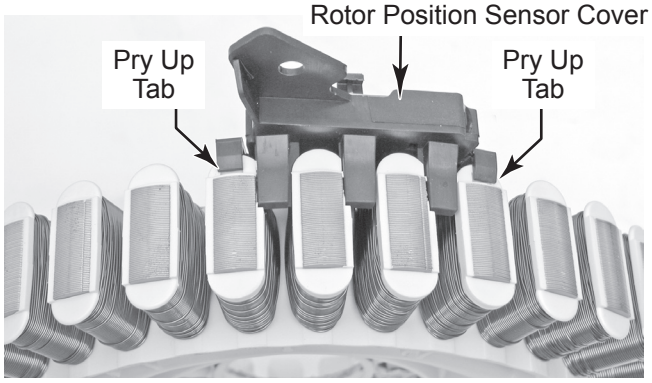

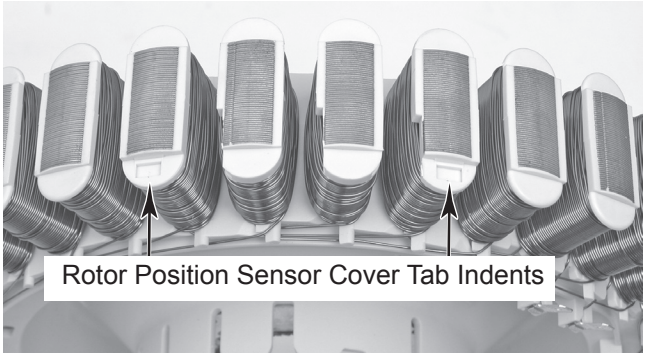

REASSEMBLY NOTE: When you reinstall the drive motor rotor over the stator assembly, do not grip the rotor housing around the rear edge with your fingers. The magnets around the rotor housing are very strong, and they will pull the rotor into the stator coil magnets when the rotor magnets come within their magnetic field. Keep your fingers along the outside of the rotor housing and away from the rear edge when you are installing it on the stator assembly.

Drive Motor Stator Assembly

Drive Motor Rotor Assembly

REMOVING THE TUB

⚠ WARNING

Electrical Shock Hazard

Disconnect power before servicing.

Replace all parts and panels before operating.

Failure to do so can result in death or electrical shock.

1. Unplug washer or disconnect power.
2. Turn off the water supply to the washer.
3. Disconnect the hot and cold water hoses from the rear of the washer, and remove the end of the drain hose from the standpipe or laundry tub.
4. Remove the basket and lint filter from the washer (see page 4-10 for the procedures).

NOTE: Have a shop cloth handy to clean off any grease from your hands.

5. Remove the four suspension rod assemblies from the washer. To remove a rod assembly:
   a) Grasp the rod several inches below the suspension ball, and lift the rod so the hooked end is free of the ball (see the top right photo).
   b) Rotate the suspension ball so that the slotted side is parallel with the hooked end of the rod, and slide the rod out of the ball. Keep the ball in its holder.

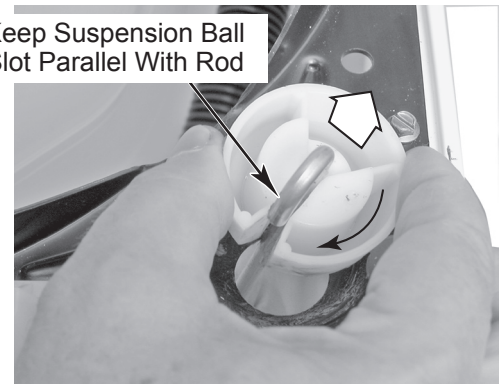

c) Reach down along the side of the tub, and press in on the suspension rod holder locking tabs, then push the holder out of the tub opening.

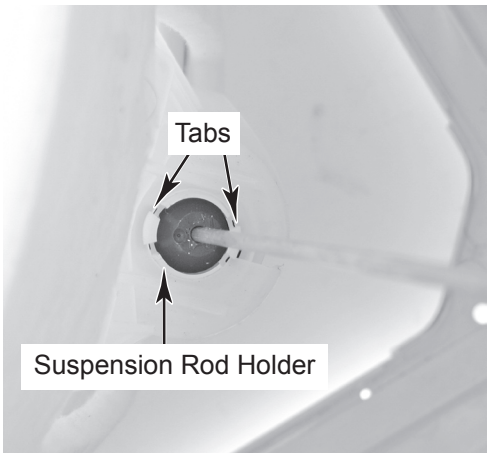

d) Position the suspension rod through the slot in the tub opening, and remove the rod assembly from the washer. **NOTE:** Unsnap the wire holder from the right rear suspension rod before removing it.

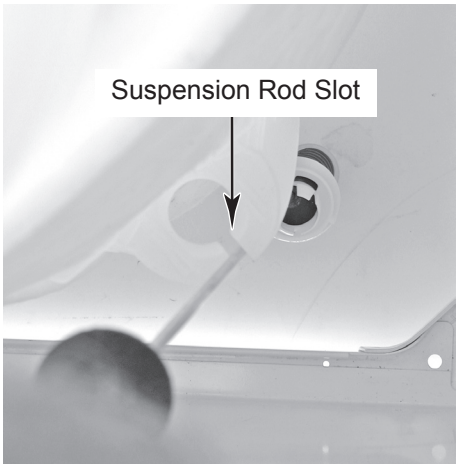

6. At the right rear corner of the washer, reach down and pull the pressure transducer tube off the tank.

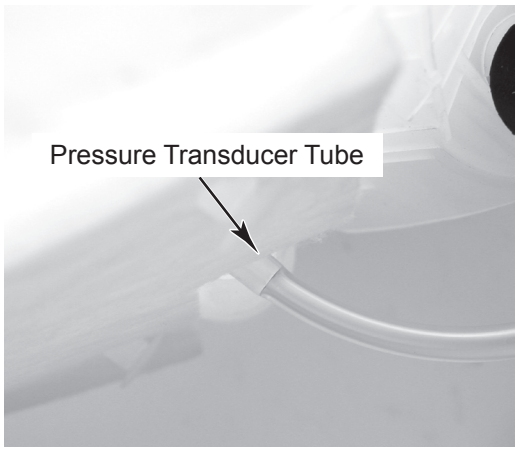

7. Lower (do not latch) the top of the cabinet.
8. Carefully lay the washer on its front panel. Place padding on the floor to protect the surfaces.
9. Remove the drain and recirculation pumps (see page 4-12 for the procedures).
10. Remove the drive motor (see page 4-14 for the procedure).
11. Pull the tub out of the bottom of the washer.
12. Remove the two 5/16″ hex-head screws from the counterbalance weight and remove the weight from the tub.
13. Loosen the clamps and remove the recirculation and drain hoses from the tub.
14. Remove the hex-head clamp screw from the recirculation outlet hose extension, and remove the extension from the side of the tub.

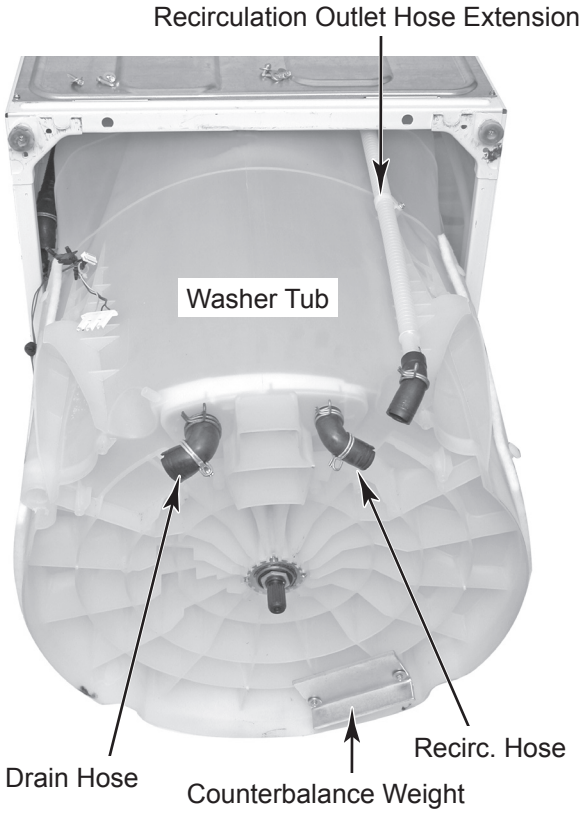

ACCESSING THE PRESSURE TRANSDUCER TUBING, RECIRCULATION TUBE, AND DRAIN PUMP HARNESS

⚠ WARNING

Electrical Shock Hazard

Disconnect power before servicing.

Replace all parts and panels before operating.

Failure to do so can result in death or electrical shock.

The following procedure allows you to access the following components for service by removing the rear panel:

- Drain Pump Harness
- Pressure Transducer Tubing
- Recirculation Tube

1. Unplug washer or disconnect power.
2. Turn off the water supply to the washer.
3. Disconnect the hot and cold water hoses from the rear of the washer, and remove the end of the drain hose from the standpipe or laundry tub.
4. Remove the eight screws from the rear panel and remove the panel (see the top right photo).

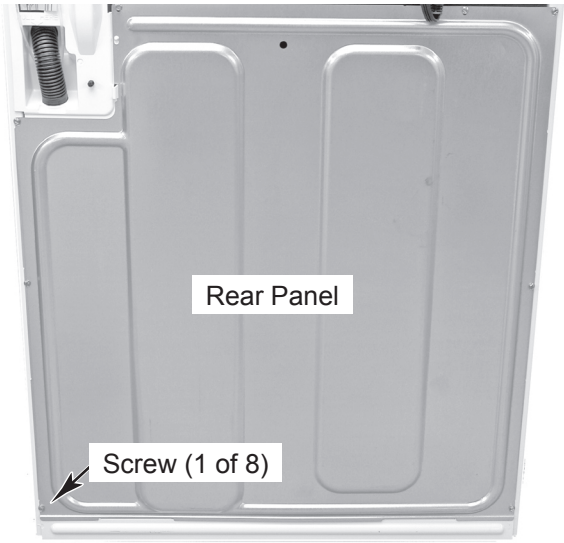

COMPONENT TESTING

Before testing any of the components, perform the following checks:

- The most common cause for control failure is corrosion on connectors. Therefore, disconnecting and reconnecting wires will be necessary throughout test procedures.
- All tests/checks should be made with a VOM or DVM having a sensitivity of 20,000 ohms-per-volt DC, or greater.
- Check all connections before replacing components, looking for broken or loose wires, failed terminals, or wires not pressed into connectors far enough.
- Resistance checks must be made with power cord unplugged from outlet, and with wiring harness or connectors disconnected.

⚠ WARNING

Electrical Shock Hazard

Disconnect power before servicing.

Replace all parts and panels before operating.

Failure to do so can result in death or electrical shock.

WATER INLET/ DISPENSER VALVE ASSEMBLY

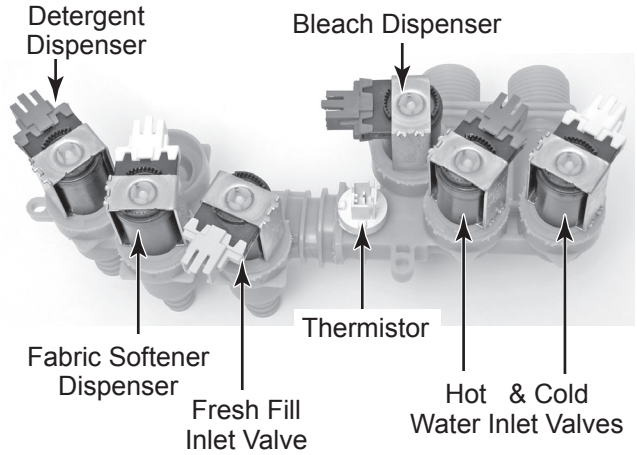

Refer to page 4-4 for the procedure for accessing the water inlet/dispenser valve assembly.

1. Unplug washer or disconnect power.
2. Disconnect the wire connector from the component under test.
3. Set the ohmmeter to the R x 1 scale.
4. **Water Inlet / Dispenser Solenoids:** Touch the ohmmeter test leads to each of the water inlet/dispenser valve solenoid terminals. The meter should indicate between 700 and 900 Ω. If the reading is outside this range, replace the valve assembly.
5. **Thermistor:** Touch the ohmmeter test leads to the thermistor terminals. The meter should indicate as shown in the following chart.

THERMISTOR RESISTANCE

Temperature	Resistance (Ohms)	Temperature	Resistance (Ohms)
10°C (50°F)	19k–20.5k Ω	38°C (100°F)	5.6k–5.9k Ω
16°C (60°F)	15k–15.7k Ω	44°C (110°F)	4.6k–4.9k Ω
21°C (70°F)	11.7k–12.2k Ω	49°C (120°F)	3.6k–3.8k Ω
27°C (80°F)	9.1k–9.5k Ω	55°C (130°F)	2.9k–3.1k Ω
32°C (90°F)	7.2k–7.6k Ω		

⚠ WARNING

Electrical Shock Hazard

Disconnect power before servicing.

Replace all parts and panels before operating.

Failure to do so can result in death or electrical shock.

DRAIN PUMP

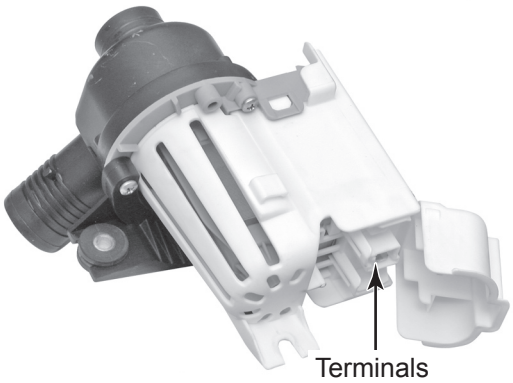

Refer to page 4-12 for the procedure for accessing the drain pump.

1. Unplug washer or disconnect power.
2. Disconnect the wire connector from the drain pump terminals.
3. Set the ohmmeter to the R x 1 scale.
4. Touch the ohmmeter test leads to each of the drain pump terminals. The meter should indicate between 10.5 and 14 Ω.

RECIRCULATION PUMP

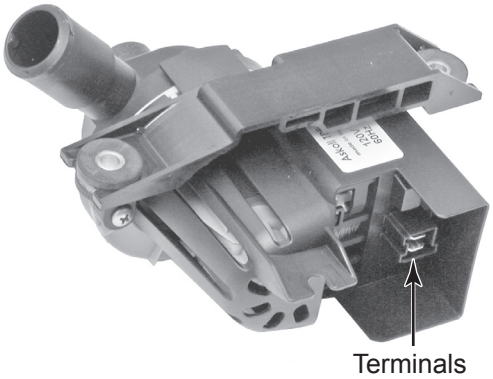

Refer to page 4-12 for the procedure for accessing the recirculation pump.

1. Unplug washer or disconnect power.
2. Disconnect the wire connector from the recirculation pump terminals.
3. Set the ohmmeter to the R x 1 scale.
4. Touch the ohmmeter test leads to each of the recirculation pump terminals. The meter should indicate between 30 and 38 Ω.

⚠ WARNING

Electrical Shock Hazard

Disconnect power before servicing.

Replace all parts and panels before operating.

Failure to do so can result in death or electrical shock.

LID LOCK

Refer to page 4-6 for the procedure for accessing the lid lock.

1. Perform the Manual: Door Switch and Manual: Door Lid Lock tests on page 6-7.
2. Remove the console to access the machine/motor control assembly (see “Accessing & Removing the Electronic Assemblies” on page 6-15).
3. Visually check that the P12 connector is inserted all the way into the machine/motor control.
   - If visual check passes, go to step 4.
   - If visual check fails, reconnect P4 and repeat step 1.
4. Unplug washer or disconnect power.
5. Check the lid lock motor winding and switches by removing P12 from the machine/motor control, and checking the resistance values shown in the following Lid Lock Resistance table.

LID LOCK RESISTANCE

Component	Resistance Unlocked	Resistance Locked	Contacts Measured	
Motor Winding	35 ±5 Ω	35 ±5 Ω	P12-2	P12-3
Lock Switch - Home	0 Ω	Open Circuit	P12-1	P12-4
Lock Switch - Lock	Open Circuit	0 Ω	P12-1	P12-7
Lock Switch - Lid	Lid Closed = 0 Ω Lid Open = Open Circuit		P12-1	P12-5

   - If resistance values are good, go to step 6.
   - If switch measurements do not match the values shown in the table for unlocked (or locked) conditions, a problem exists in the door lid lock. Replace the door lid lock.
6. If the Manual: Door Switch or Manual: Door Lid Lock tests in step 1 failed, then the machine/motor control has failed:
   - Replace machine/motor control assembly.
   - Perform the Manual: Door Switch and Manual: Door Lid Lock tests in step 1 to verify repair.

⚠ WARNING

Electrical Shock Hazard

Disconnect power before servicing.

Replace all parts and panels before operating.

Failure to do so can result in death or electrical shock.

DRIVE MOTOR STATOR

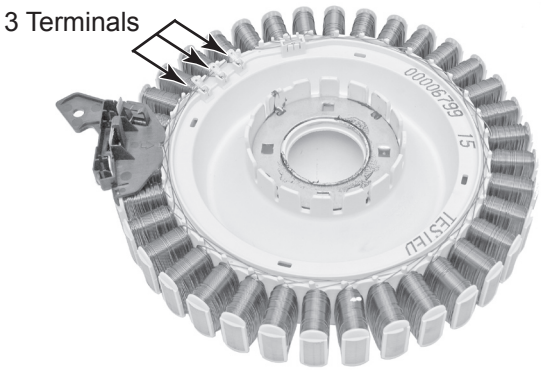

Refer to page 4-14 for the procedure for accessing the drive motor.

1. Unplug washer or disconnect power.
2. Disconnect the wire connector from the drive motor terminals.
3. Set the ohmmeter to the R x 1 scale.
4. Touch the ohmmeter test leads to any two of the three drive motor terminals. The meter should indicate 31 Ω.

DIAGNOSTICS & TROUBLESHOOTING

⚠ WARNING

Electrical Shock Hazard

Disconnect power before servicing.

Replace all parts and panels before operating.

Failure to do so can result in death or electrical shock.

DISPLAY FAULT / ERROR CODES

DISPLAY (Saved Code)	EXPLANATION AND RECOMMENDED PROCEDURE
LF (F30)	**Long Fill** **LF** flashes when the water level does not change for a period of time after the valves are turned on OR water has disengaged the basket but control does not detect a water level change. • Is water supply connected and turned on? • Are hose screens plugged? • Is water entering the tub? If so check pressure hose connection to machine/motor control. • See TEST #2.
Ld (F32)	**Long Drain** **Ld** flashes when the water level does not change after the drain pump is on. • Is the drain hose or the drain pump clogged? • Is the drain hose height greater than 96˝ ? • Is the pump running? If not, see TEST #7.
uL (none)	**Unbalanced Load** **uL** is displayed when the machine/motor control detects an off-balance load, and is steady on while the washer runs a mini-cycle to rebalance the load. • Display clears if mini-cycle successfully rebalanced the load. • If the mini-cycle is unsuccessful, **uL** will flash until the door lid is opened, allowing the customer to view and redistribute the load.
oL (F70)	**Overloaded** **oL** flashes when the machine/motor control detects a load size that exceeds the washer's capacity. • Open the door lid to clear display, remove excess laundry, then restart the cycle.
Sd (F71)	**Suds Detection** **Sd** is displayed when the machine/motor control, by analyzing drag on the basket, detects a suds-lock condition, and is steady on while the control then runs a mini-clean out cycle. If the clean out cycle is unable to correct the over-sudsing problem, the cycle ends and **Sd** flashes in the display. This may signify: • Excessive detergent usage. • Basket cannot engage during drain step. • Mechanical friction on drive mechanism, not allowing basket to engage.

Continued on the next page.

DISPLAY (Saved Code)	EXPLANATION AND RECOMMENDED PROCEDURE
lid (F81)	**Open/Close Door Lid** **Lid** flashes when the following conditions occur: • User presses START with lid open. • User presses START after 2 consecutive machine cycles without opening lid. • The machine/motor control cannot detect the lid switch opening and closing properly. See TEST #8.
Po (none)	**Pump Out (lid opened)** **Po** flashes when drain pump begins pumping out water from tub upon activation by the door lid having been left open for more than 10 minutes. • Close door lid to stop drain pump.
HC (none)	**Hot, Cold Reversed** **HC** flashes when the hot and cold inlet hoses are reversed. • Make sure inlet hoses are connected correctly.
dL (F80, 82, 84, 85)	**Door Lock Failure** **dL** flashes if the following conditions occur: • Door lid is not closed completely due to interference. • Wash media buildup is preventing the lock bolt from extending. • Machine/motor control detects open door lid switch when attempting to lock. • Machine/motor control cannot determine if door lid is in a locked state. See TEST #8.
dU (F83)	**Door Unlock Failure** **dU** flashes if the following conditions occur: • Excessive force on door lid is preventing lock bolt from retracting. • Wash media buildup is preventing lock bolt from retracting. • Machine/motor control cannot determine if door lid is in an unlocked state. See TEST #8.
F 1 (F60-68)	**Primary Control Failure** **F** then **1** flashes when there is a primary control failure. Replace the machine control assembly. See Accessing & Removing the Electronic Assemblies.
F 2 (F2)	**Keypad/User Interface Failure** **F** then **2** flashes when in: • Diagnostics Test mode if a stuck key is detected. • Standby mode if there is a user interface mismatch. See TEST #4.

DISPLAY (Saved Code)	EXPLANATION AND RECOMMENDED PROCEDURE
F 40 (F40)	**ATC Thermistor Open/Short** **F** then **40** flashes when the ATC Thermistor is detected to be open or shorted. See TEST #5.
F 41 (F41)	**Motor RPS Thermistor Open/Short** **F** then **41** flashes when the motor rotor position sensor (RPS) thermistor is detected to be open or shorted. See TEST #3. **NOTE:** This error code is only displayed when viewing saved fault codes. See Diagnostic Test for accessing saved fault codes.
F 42 (F42)	**Heater Thermistor Open/Short (Not Used)** **F** then **42** flashes when the heater thermistor is open or shorted.
F 50 (F50)	**Motor Stalled** **F** then **50** flashes when the motor rotor position sensor (RPS) senses no rotation. • Does basket turn freely? If not, make sure bottom shipping pack has been removed. Remove basket and look for foreign object. Determine cause of friction. • If basket turns freely, see TEST #3.
F 51 (F51)	**Motor RPS Failure** **F** then **51** flashes when there is a motor rotor position sensor (RPS) failure. See TEST #3.
F 52 (F52)	**Motor Stop Failure** **F** then **52** flashes when the motor rotor position sensor (RPS) senses rotation after stop command. See TEST #3.
F 53 (F53)	**Motor Control Overtemp** **F** then **53** flashes when the machine/motor control detects high temperature for the motor module. • Does basket turn freely? If not, determine cause of friction. • If basket turns freely, see TEST #3.
F 54 (F54)	**Motor Control Overcurrent** **F** then **54** flashes when the machine/motor control detects high current for the motor module. • Does basket turn freely? If not, determine cause of friction. • If basket turns freely, see TEST #3.
F 72 (F72)	**Basket Re-engagement Failure** **F** then **72** flashes when the basket check routine fails to determine if the basket is re-engaged after being disengaged. • Is the basket floating? If yes, pump out water. See Long Drain. • Does basket turn freely? If not, determine cause of friction.

DIAGNOSTIC GUIDE

Before servicing, check the following:

- Make sure there is power at the wall outlet.
- Has a household fuse blown or circuit breaker tripped? Time delay fuse?
- Are both hot and cold water faucets open and water supply hoses unobstructed?
- All tests/checks should be made with a VOM (volt-ohm-milliammeter) or DVM (digital-voltmeter) having a sensitivity of 20,000 ohms per volt DC or greater. **NOTE:** Avoid using large diameter probes when checking harness connectors as the probes may damage the connectors upon insertion.
- Check all connections before replacing components. Look for broken or loose wires, failed terminals, or wires not pressed into connectors far enough.
- A potential cause of a control not functioning is corrosion on connections. Observe connections and check for continuity with an ohmmeter.
- Connectors: Look at top of connector. Check for broken or loose wires. Check for wires not pressed into connector far enough to engage metal barbs.
- Resistance checks must be made with washer unplugged or power disconnected.

DIAGNOSTIC TESTS

There are three diagnostic test modes available: Automatic, Manual, and Console. These tests allow the factory or service personnel to test and verify all inputs to the machine/motor control. One may want to allow the automatic test cycle to complete prior to going into specific troubleshooting tests.

ACTIVATION OF AUTOMATIC DIAGNOSTIC TEST MODE

1. Be sure the washer is in standby mode (plugged in with all indicators off, or with only the Clothes Clean or Done indicator on).
2. Select any one button (except POWER, START, and STOP) and follow the steps below, using the same button (remember the button):

Press/hold 3 seconds → Release for 3 seconds → Press/hold 3 seconds → Release for 3 seconds → Press/hold 3 seconds

   - If this test mode has been entered successfully, all indicators on the console are illuminated for 5 seconds with ***88*** showing in the Estimated Time Remaining two-digit display.
   - If indicators do not display as described above, the press/hold/release procedure above may not have been performed within the time frame necessary for successful entry. Repeat step 2 to ensure this was not the cause. If still unsuccessful, see Diagnostic: Unsuccessful Entry.
3. The program then checks for saved fault codes:
   - If there are saved fault codes, see Diagnostic: Saved Fault Codes.
   - If there are no saved fault codes, all indicators on the console will momentarily turn off, then turn back on with ***88*** displayed. After 5 seconds, the Automatic test begins.

DIAGNOSTIC: Automatic

Performs a five-minute automatic test with water functions to check major washer functions (door can be open). Press the same button used in step 2 to advance through automatic test steps.

NOTE: Basket must be floating in order to agitate. Step C1 must be allowed to complete before advancing to step C5.

Two-Digit Indicator	Machine Function	Recommended Procedure
C0	Slow spin to 23 rpm.	If no spin go to Manual: Motor, Spin.
C1	Warm water fills through Fresh and Detergent valves, then Fresh valve until basket floats (disengages); then washer continues filling through Fresh and Detergent valves to minimum water level.	If no water or fill temperature is wrong, go to Manual: Water Valves. If basket does not float or disengage, determine cause of friction.
C2	Cold water fill through Bleach valve for 10 seconds.	If no water in bleach cup go to Manual: Water Valves.
C3	Hot water fill through Fabric Softener valve for 10 seconds. **NOTE:** Step will occur but no water can be dispensed with models that do not have a fabric softener valve.	If no water in fabric softener cup go to Manual: Water Valves.
C4	Warm water fill through Detergent valve for 10 seconds.	If no water in detergent cup go to Manual: Water Valves.
C5	Agitate for 15 seconds.	If no wash action go to Manual: Motor, Agitate.
C6	Recirculate for 10 seconds.	If water is not being re-circulated go to Manual: Pumps.
C7	Drain to basket engaged plus timed drain for 10 seconds.	If water is not draining go to Manual: Pumps. If basket does not engage determine cause of friction.
C8	Drain & slow spin 23 rpm.	If drain pump is not on go to Manual: Pumps. If basket is not turning go to Manual: Motor.
C9	Coast to 0 rpm.	If basket does not stop spinning within 5 seconds, press STOP and restart test.
(none) (Test ends)	End of cycle beep.	If no end of cycle beep, make sure cycle signal is on. From Setting Mode, pressing buttons should sound valid key press beep.

DIAGNOSTIC: Unsuccessful Entry

If entry into diagnostic mode is unsuccessful (see steps 1 and 2 of Activation of Automatic Diagnostic Test Mode), refer to the following indications and actions:

Indication 1: None of the indicators or display turns on.

Action: Press POWER button to enter setting mode.

- If indicators come on, try to change the function for the button used to activate the diagnostic test mode. If that button fails to change the function, something is faulty with the button, and it is not possible to enter the diagnostic mode.
- If no indicators come on after pressing POWER button, go to TEST #1.

Indication 2: Fault code flashes from the display.

Action: Review the Display Fault/Error Codes table for the recommended procedure.

DIAGNOSTIC: Saved Fault Codes

If there are saved fault codes (as indicated in step 3 of Activation of Automatic Diagnostic Test Mode), the most recent fault code will be displayed and alternately show “F” and “XX” where XX is the fault code, and all the cycle selector indicators flash.

Press and release the same button used to activate Diagnostics	→	Second most recent fault code is displayed.
Repeat	→	Third most recent fault code is displayed.
Repeat	→	Fourth most recent fault code is displayed.
Repeat	→	All indicators momentarily turn off, then stay on. After 5 seconds, Automatic test cycle begins. **NOTE:** Fault codes are retained.

ACTIVATION OF MANUAL DIAGNOSTIC TEST MODE

1. Carefully read and perform steps 1 and 2 under Activation of Automatic Diagnostic Test Mode, and press the same button once during the 5 second display time of the ***88***.

   NOTE: If the button is not pressed within 5 seconds, the Automatic test will start (after saved fault codes).

2. If done successfully, a single beep occurs and the two-digit display shows one of the following console ID#s: *06, 08, 12, 13, 14, 15, 16, 17, 18, 19, 20, 21, 44, 45, 46, 47, 48, 49, 60, 61, 62* for 3 seconds, then displays *00* and the Add A Garment indicator LED flashes. See Diagnostic: Manual.
   - If entry into Manual Diagnostic mode is successful, but none of the console ID#s above are displayed, replace the user interface assembly. See Accessing & Removing the Electronic Assemblies.

DIAGNOSTIC: Manual

Assumes Manual Diagnostic mode has been entered, two-digit display shows 00, and ADD A GARMENT indicator is flashing.

NOTE: If there is no activity (button press, cycle select) within 5 minutes, the control automatically exits Diagnostic mode and enters standby mode.

Manual: Water Valves

To check FRESH valve select or press the following:

WHITES/WHITES • START (turns on Fresh valve, cycle indicator flashes) • WASH/RINSE TEMP (enables fill of Hot, Warm, Cold or no water according to WASH/RINSE TEMP selection and indicator) • START (turns off Fresh valve, cycle indicator is steady on).

To check DETERGENT valve select or press the following:

HEAVY DUTY • START (turns on Detergent valve, cycle indicator flashes) • WASH/RINSE TEMP (enables fill of Hot, Warm, Cold or no water according to WASH/RINSE TEMP selection and indicator) • START (turns off Detergent valve, cycle indicator is steady on).

To check FABRIC SOFTENER valve select or press the following:

NORMAL • START (turns on Fabric Softener valve, cycle indicator flashes) • WASH/RINSE TEMP (enables fill of Hot, Warm, Cold or no water according to WASH/RINSE TEMP selection and indicator) • START (turns off Fabric Softener valve, cycle indicator is steady on).

To check BLEACH valve select or press the following:

CASUAL • START (turns on Bleach valve, cycle indicator flashes) • WASH/RINSE TEMP (enables fill of Hot, Warm, Cold or no water according to WASH/RINSE TEMP selection and indicator) • START (turns off Bleach valve, cycle indicator is steady on).

NOTE: Washer can only fill cold through Bleach valve.

- If any valve fails to turn on go to TEST #2.

Manual: Pumps

Models with Push-button cycles:

Press and release: CLEAN WASHER or DRAIN & SPIN	→	Turns on recirculation pump, indicator is steady on.
Repeat	→	Turns off recirculation pump, indicator turns off.
Repeat	→	Turns on drain pump, indicator flashes.
Repeat	→	Turns off drain pump, indicator turns off.

Models using Cycle Selector:

Select CLEAN WASHER or DRAIN & SPIN.		
Press and release: START	→	Turns on recirculation pump, cycle indicator is steady on.
Repeat	→	Turns off recirculation pump, indicator turns off.
Repeat	→	Turns on drain pump, indicator flashes.
Repeat	→	Turns off drain pump, indicator turns off.

- If pumps fail to turn on go to TEST #7.

Manual: Door Switch

Opening the door should cause the Clothes Clean or Done status indicator to turn off. Closing the door should cause the indicator to turn on.

- If Clothes Clean or Done indicator does not turn off or on, go to TEST #8.

Manual: Door Lid Lock

NOTE: Door must be closed. If door is not closed, an invalid button press beep will occur when performing next step.

Press and release: 2nd RINSE or EXTRA RINSE	→	Door locks, lid lock indicator turns on.
Repeat	→	Door unlocks, lid lock indicator turns off.

- If door does not lock or unlock, go to TEST #8.

Manual: Motor

Rotor Position Sensor (RPS): Uses Wash, Rinse and Spin indicators to detect the three rotor position sensors. Console may have up to two of these indicators on at one time when the basket is not moving. Open door and rotate basket by hand. The Wash, Rinse and Spin status indicators should toggle on and off according to direction the basket is being turned.

- If none of these indicators are on go to TEST #3.

Spin: To activate Spin, door must be closed with door lock enabled. See Manual: Door Lid Lock.

NOTE: If door is not closed, an invalid button press beep will occur when performing next step.

Press and release: SPIN SPEED, WATER LEVEL or LOAD SIZE	→	Motor/basket spins at 23 rpm.
Repeat	→	Motor/basket spins at 530 rpm.
Repeat	→	Motor/basket spins at 1000 rpm.
Repeat	→	Motor turns off.

NOTE: Indicators above button scroll from top to bottom.

- If motor fails to spin, go to TEST #3.

Agitate: Water must cover the wash plate (or agitator vanes) to ensure the basket is floating prior to agitation. Enabling agitation without enough water may cause a fault condition to occur. See Manual: Water Valves.

Press and release: SOIL LEVEL	→	Gentle wash action.
Repeat	→	Normal wash action.
Repeat	→	Heavy wash action.
Repeat	→	Motor turns off.

NOTE: Indicators above button scroll from top to bottom.

- If motor fails to agitate, go to TEST #3.

ACTIVATION OF CONSOLE AND INDICATORS DIAGNOSTIC TEST MODE

This test checks the cycle selector knob, indicators, buttons, two-digit display and beeper.

1. Plug in washer or reconnect power.
2. Read through step 3 before continuing. From Standby (Off) Mode press and release (key-dance) the following buttons within 4 seconds:

   SOIL LEVEL → WASH/RINSE TEMP → SOIL LEVEL → WASH/RINSE TEMP

   If successful, two-digit ***dt*** will display and you will have 5 seconds to complete next step.
3. Within 5 seconds of ***dt*** showing in display, press START (all indicators in display are illuminated and ***88*** is displayed).
   - Press START a second time. This turns off status indicators and two-digit display (all other indicators remain illuminated).
   - Press START a third time. This turns on status indicators and two-digit display (all indicators are illuminated).
4. Rotate WASH CYCLE selector back and forth. Indicators will toggle on (or off).

5. Press buttons to verify function. Indicators will toggle on (or off) and beep tone will sound when buttons are pressed.

   NOTE: Pressing SOIL LEVEL, SPIN SPEED, WATER LEVEL or LOAD SIZE, and WASH/RINSE TEMP will cause all indicators above these buttons to toggle on (or off) at one time.

If any of the following occur during steps, see TEST #4:

- None of the indicators light up
- No beep sound is heard
- Some buttons do not light indicators

DEACTIVATION OF DIAGNOSTIC TEST MODE

Press the STOP or POWER button at any time to exit Automatic, Manual, or Console & Indicators diagnostic test modes.

TROUBLESHOOTING GUIDE

PROBLEM	POSSIBLE CAUSE/TEST **NOTE:** Possible Cause/Test must be performed in the sequence shown for each problem.
WON'T POWER UP (No response when buttons are pressed.)	1. Supply connections. See TEST #1. 2. Unplug washer or disconnect power. 3. Check harness connections. 4. User interface assembly. See TEST #4.
WON'T START CYCLE (No response when Start button is pressed.)	1. Supply connections. See TEST #1. 2. Unplug washer or disconnect power. 3. Check harness connections. 4. User interface assembly. See TEST #4.
WON'T SHUT OFF WHEN EXPECTED	1. User interface assembly. See TEST #4. 2. Lid switch. See TEST #8.
CONTROL WON'T ACCEPT SELECTIONS	User interface assembly. See TEST #4.
WON'T DISPENSE	1. Check water connections to machine. 2. Check for plugged screen in water source. 3. Log valve. See TEST #2.
WON'T FILL	1. Check water connections to machine. 2. Check for plugged screen in water source. 3. Log valve. See TEST #2. 4. Unplug washer or disconnect power. 5. Check harness connections.
OVER FILLS	1. Unplug washer or disconnect power. 2. Check pressure hose connections. 3. Water level and calibration. See TEST #6.
WON'T AGITATE	1. Make sure basket is floating. 2. Unplug washer or disconnect power. 3. Check harness connections. 4. Lid switch. See TEST #8. 5. Motor. See TEST #3.
WON'T SPIN	1 Lid switch. See TEST #8. 2. Unplug washer or disconnect power. 3. Check harness connections. 4. Motor. See TEST #3.
WON'T DRAIN	1. Check drain hose installation. 2. Check for plugged drain hose. 3. Drain pump. See TEST #7.
INCORRECT WATER TEMPERATURE	1. Check for swapped water connections to machine. 2. ATC (Automatic Temperature Control). See TEST #5.
ALL HOT FILLS	ATC (Automatic Temperature Control). See TEST #5.
WON'T RECIRCULATE WATER	1. Unplug washer or disconnect power. 2. Check for plugged recirculation hose. 3. Check for leaks in recirculation system. 4. Recirculate pump. See TEST #7.
DISPLAY IS FLASHING	See "Display Fault/Error Codes."

TROUBLESHOOTING TESTS

TEST #1 Supply Connections

This test assumes that proper voltage is present at the outlet.

1. Unplug washer or disconnect power.
2. Access the machine/motor control assembly. See Accessing & Removing the Electronic Assemblies.
3. With an ohmmeter, check for continuity between the neutral (N) terminal of the plug and P13-1 on the machine/motor control. See Figures 3 and 4, page 6-16.
   - If there is continuity, go to step 4.
   - If there is no continuity, replace the power cord.
4. In a similar way, check the continuity between the L1 terminal of the plug and P13-3 on the machine/motor control. See Figures 3 and 4, page 6-16.
   - If there is continuity, go to step 5.
   - If there is no continuity, replace the power cord.
5. Visually check that the P10 connector is inserted all the way into the machine/motor control.
6. Visually check that the user interface assembly is properly inserted into the front console.
7. If both visual checks pass, replace the user interface assembly. See Reinstalling the Electronic Assemblies.
8. Plug in washer or reconnect power.
9. Activate the Console and Indicators Diagnostic Test mode to verify repair.
10. If indicators still do not light, the machine/motor control has failed:
    - Unplug washer or disconnect power.
    - Replace the machine/motor control assembly.
    - Plug in washer or reconnect power.

TEST #2 Log Valve

This test checks the electrical connections to the valves, and the valves themselves.

1. Check the relays and electrical connections to the valves by performing the steps under Diagnostic: Manual, then Manual: Water Valves. Each step in the test activates a group of valves. The following steps assumes one (or more) valve(s) failed to turn on.
2. For the valve(s) in question check the individual solenoid valves:
   - Unplug washer or disconnect power.
   - Disconnect connector P1 and P2 from the machine/motor control.See Figure 4, page 6-16.
   - Check harness connection to solenoid valves.
3. Check resistance of valve coils at contacts P1 and P2 shown in the Wiring Diagram on page 7-1. Resistance values should match those shown.
   - If resistance readings are tens of ohms outside of range, replace the entire log valve assembly.
   - If resistance readings are within range, replace the machine/motor control assembly.
4. Reconnect connectors P1 and P2 to the machine/motor control.

TEST #3 Motor Circuit

This test checks the wiring to the motor and rotor position sensor; and the motor and rotor position sensor themselves.

NOTE: Drain water from tub.

1. See Activation of Manual Diagnostic Test Mode, and check the motor and electrical connections by performing the Agitate and Spin tests under Manual: Motor. The following steps assumes that this step failed.
2. Unplug washer or disconnect power.
3. Check to see if basket will turn freely.
   - If basket turns freely, go to step 4.
   - If basket does not turn freely, determine what is causing the mechanical friction or lock up.
4. Remove the console to access the machine/motor control assembly. See Accessing & Removing the Electronic Assemblies.
5. Visually check that the P5 and P10 connectors are inserted all the way into the machine/motor control.
   - If visual checks pass, go to step 6.
   - If visual checks fail, reconnect P5 and P10 and repeat step 1.
6. With an ohmmeter, check for 16 ohms resistance at the P5 connector between pins P5-1 and P5-2, and also between pins P5-1 and P5-3. Also measure the resistance at the P10 connector between pins P10-1 and P10-7 and verify that the resistance is within the range shown in the wiring diagram on page 7-1.
   - If the resistance is correct, go to step 11.
   - If the P5 connector resistance is much higher than 16 ohms, or the P10 connector resistance is out of range, go to step 7.
7. Tilt machine forward to access the bottom of the machine and the drive motor area. See Figure 1 on page 6-13. Remove the motor bolt, then the motor cover to access the motor connections. See Figure 2 on page 6-13.
8. Visually check the mounting bracket and electrical connections to the motor and rotor position sensor board.
   - If visual check passes, go to step 9.
   - If visual check fails, reconnect the electrical connections, reassemble stator and motor cover and repeat step 1.

9. With an ohmmeter, check for continuity between all pins on the P10 machine/motor control connector and the motor rotor position sensor (RPS) connector. See Figures 2 and 4, pages 6-13 and 6-16.
   - If there is continuity, go to step 11.
   - If there is no continuity, replace the lower machine harness.
10. With an ohmmeter, check for continuity between all pins on the P5 machine/motor control connector and the drive motor connector.
   - If there is continuity, replace the drive motor.
   - If there is no continuity, replace the lower machine harness.
11. The drive motor and lower harness are good. Replace the motor RPS board and perform the Diagnostics test in step 1 to verify repair.
12. If the Diagnostics motor test in step 1 failed, then the machine/motor control has failed:
   - Unplug the washer or disconnect power.
   - Replace the machine/motor control assembly.
   - Perform the Motor Diagnostics in step 1 to verify repair.

TEST #4 Console and Indicators

This test is performed when any of the following situations occurs during the Console and Indicators Diagnostic Test:

- None of the indicators light up
- No beep sound is heard
- Some buttons do not light indicators

None of the indicators light up:

1. Perform steps in Accessing & Removing the Electronic Assemblies, and visually check that the P11 connector is inserted all the way into the machine/motor control.
2. Visually check that the user interface assembly is properly inserted in the console assembly.
3. If both visual checks pass, replace the user interface assembly.
4. Plug in washer or reconnect power.
5. Activate the Console and Indicators Diagnostic Test mode to verify repair.
6. If indicators still do not light, the machine/motor control has failed:
   - Unplug washer or disconnect power.
   - Replace the machine/motor control assembly.
   - Plug in washer or reconnect power.
   - Activate the Console and Indicators Diagnostic Test mode to verify repair.

No beep sound is heard:

1. Perform steps in Accessing & Removing the Electronic Assemblies, and visually check that the P5 connector is inserted all the way into the machine/motor control.
   - If visual check passes, replace the user interface assembly.
2. Plug in washer or reconnect power.
3. Activate the Console and Indicators Diagnostic Test mode to verify repair.
4. If replacing the user interface assembly failed:
   - Unplug washer or disconnect power.
   - Replace the machine/motor control assembly.
   - Plug in washer or reconnect power.
   - Activate the Console and Indicators Diagnostic Test mode to verify repair.

Some buttons do not light indicators:

1. Perform steps in Accessing & Removing the Electronic Assemblies, and visually check that the console electronics and housing assembly is properly inserted into the front console.
   - If visual check passes, replace the user interface assembly.
2. Plug in washer or reconnect power.
3. Activate the Console and Indicators Diagnostic Test mode to verify repair.

TEST #5 Automatic Temperature Control

This test checks the water inlet valves, the temperature sensor, and the machine/motor control.

1. Check the valves by performing Test #2, before continuing to the next step.
2. Ensure proper hose connections and that household's hot water is present.
3. Plug in washer or reconnect power.
4. Remove all clothes from the machine.
5. Select POWER • Wash/Rinse Temp. WARM/WARM • wash cycle NORMAL • START.
6. After the tub fills and starts to wash, stop the machine.
7. Measure the water temperature, and verify it is 85°±5°F (29°±3°C).
   - If the water temperature is correct, ATC is functional.
   - If the water temperature is incorrect, then go to step 8.
8. Unplug washer or disconnect power.
9. Access the machine/motor control assembly. See Accessing & Removing the Electronic Assemblies.
10. Remove the P9 connector, and using an ohmmeter, measure the resistance between pins P9-1, and P9-3. Verify that the resistance is within range as shown in the following table:

THERMISTOR RESISTANCE			
Temperature	Resistance (Ohms)	Temperature	Resistance (Ohms)
50°F (10°C)	19k–20.5k Ω	100°F (38°C)	5.6k–5.9k Ω
60°F (16°C)	15k–15.7k Ω	110°F (44°C)	4.6k–4.9k Ω
70°F (21°C)	11.7k–12.2k Ω	120°F (49°C)	3.6k–3.8k Ω
80°F (27°C)	9.1k–9.5k Ω	130°F (55°C)	2.9k–3.1k Ω
90°F (32°C)	7.2k–7.6k Ω		

    - If the resistance is not within this range, go to step 11.
    - If the resistance is within this range, go to step 12.
11. Using an ohmmeter, measure continuity between all pins on the P9 connector and the thermistor contacts.
    - If there is continuity, replace the log valve assembly.
    - If there is no continuity, replace the upper harness.
12. The log valve and upper harness are good. Replace the machine/motor control assembly. See Reinstalling the Electronic Assemblies.

TEST #6 Water Level and Pressure Transducer Calibration

This test checks the water level sensing components, and calibrates the pressure sensor.

1. Unplug washer or disconnect power.
2. Access the machine/motor control assembly. See Accessing & Removing the Electronic Assemblies.
3. Check hose connection between the pressure transducer on the machine/motor control and the pressure dome attached to the tub. Check to ensure hose is routed correctly in the lower cabinet and not pinched or crimped by the back panel.
4. Plug in washer or reconnect power.
5. Drain the tub until all water has been removed from tub.
6. Remove all clothes from the machine.
7. Calibrate the pressure transducer:
   - See Activation of Manual Diagnostic Test Mode, and perform steps 1 and 2 until the display shows ***00*** and the Add A Garment indicator LED is flashing.
   - Press and hold the Cycle Signal button until a single beep sounds, and the display shows ***Pt*** to indicate zero calibration has completed.
   - Exit Diagnostic: Manual by pressing STOP or POWER.

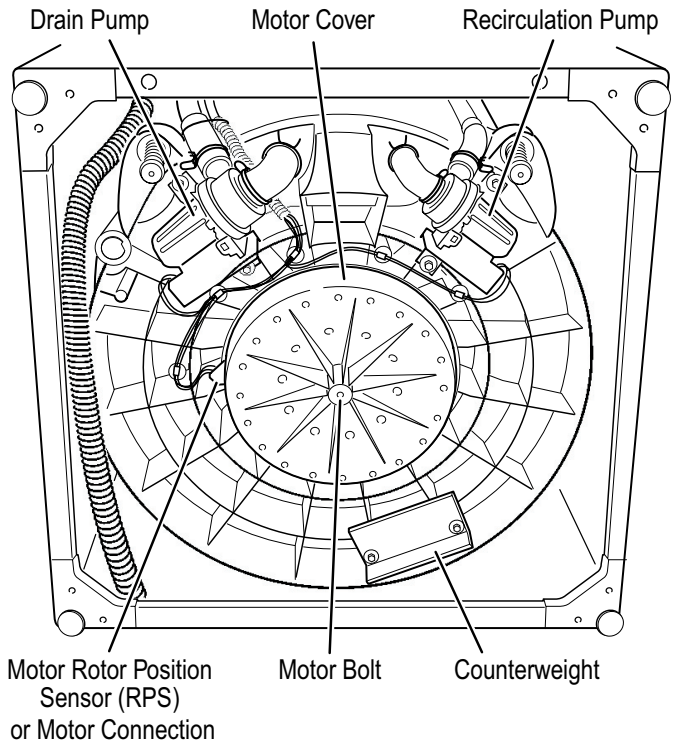

Drive motor area, viewed from bottom.

Figure 1

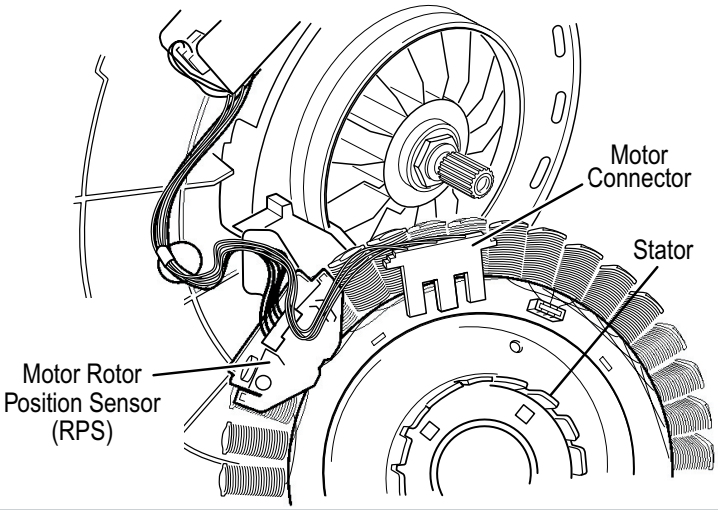

Motor cover removed to access RPS and motor connector.

Figure 2

8. Select POWER • wash cycle NORMAL • START.
9. Verify that the tub fills to the top of the impeller plate (impeller models), or to a level above the agitator vanes (agitator models), but much lower than the SUPER Load Size water level.
   - If the water level does not fill to this level, replace the machine/motor control assembly. See Accessing & Removing the Electronic Assemblies.

TEST #7 Drain/Recirculation

Perform the following checks if washer fails to drain or recirculate.

1. See Activation of Manual Diagnostic Test Mode, and perform the Manual: Pumps test.
2. Remove the console to access the machine/motor control assembly. See Accessing & Removing the Electronic Assemblies.
3. Visually check that the P4 connector is inserted all the way into the machine/motor control.
   - If visual check passes, go to step 4.
   - If visual check fails, reconnect P4 and repeat step 1.
4. Remove connector P4 from the machine/motor control and check resistance values of pump motor windings. Resistance values should match those shown in wiring diagram, page 7-1.
   - If resistance values are good, go to step 7.
   - If winding measurements are much higher (tens of ohms to infinity) than shown in wiring diagram, a problem exists in the motor winding or in the connection between the machine/motor control and the motor. Go to step 5.
5. Tilt machine forward to access the bottom of the machine and the pumps. See Figure 1, page 6-13.
6. Check the resistance at the pump motor. Remove the connector at the motor and take measurements across pump terminals. Measurements should be as shown in the wiring diagram.
   - If winding measurements are much higher (tens of ohms to infinity) than shown in wiring diagram, replace the pump motor.
   - If the resistance at the pump motor is correct, there is an open circuit in the wiring between the motor and the machine/motor control. Repair or replace the lower wiring harness.
   - If the pump motor windings and machine/motor control check OK, repair or replace the pump. Be sure to check the pump and tub sump for foreign objects before replacing pump.
7. See Activation of Manual Diagnostic Test Mode, and perform the Manual: Pumps test.
8. If the Manual: Pumps test failed, then the machine/motor control has failed:
   - Unplug the washer or disconnect power.
   - Replace the machine/motor control assembly.
   - Perform the Manual: Pump test.

TEST #8 Door Lid Lock

Perform the following checks if washer fails to lock (or unlock).

1. Perform Manual: Door Switch and Manual: Door Lid Lock tests.
2. Remove the console to access the machine/motor control assembly. See Accessing & Removing the Electronic Assemblies.
3. Visually check that the P12 connector is inserted all the way into the machine/motor control.
   - If visual check passes, go to step 4.
   - If visual check fails, reconnect P4 and repeat step 1.

4. Check the lid lock motor winding and switches by removing P12 from the machine/motor control and checking the resistance values shown in the Lid Lock Resistance table below:

LID LOCK RESISTANCE				
Component	Resistance Unlocked	Resistance Locked	Contacts Measured	
Motor Winding	35 ±5 Ω	35 ±5 Ω	P12-2	P12-3
Lock Switch - Home	0 Ω	Open Circuit	P12-1	P12-4
Lock Switch - Lock	Open Circuit	0 Ω		P12-7
Lock Switch - Lid	Lid Closed = 0 Ω Lid Open = Open Circuit			P12-5

   - If resistance values are good, go to step 5.
   - If switch measurements do not match the values shown in the table for unlocked (or locked) conditions, a problem exists in the door lid lock. Replace the door lid lock.

5. If the Manual: Door Switch or Manual: Door Lid Lock in step 1 failed, then the machine/motor control has failed:
   - Unplug washer or disconnect power.
   - Replace machine/motor control assembly.
   - Perform the Manual: Door Switch and Manual: Door Lid Lock in step 1 to verify repair.

ACCESSING & REMOVING THE ELECTRONIC ASSEMBLIES

There are two electronic assemblies; the machine/motor control assembly and the user interface assembly. See Figures 3 and 4 on page 6-16.

Accessing the Electronic Assemblies

1. Unplug washer or disconnect power.
2. Remove three screws from the rear of the console assembly. Pull console towards front of washer to hinge open and/or remove console.

Removing the Machine/Motor Control Assembly

3. Remove all the wire connections to the machine/motor control.
4. Remove the one screw holding the machine/motor control assembly to the console tray.
5. There are two plastic legs on the rear of the machine/motor control assembly that fit into the console tray. Lift the front of the control assembly to pivot it out from the console tray.

Removing the User Interface Assembly

3. Remove the wire connection to the user interface assembly.
4. Remove the wash cycle selector knob by firmly pulling on it.
5. The user interface assembly is held to the console insert panel by three screws and two locking tabs. After the screws are removed, lift each of the locking tabs to remove the back cover of the user interface assembly.
6. Remove the wash cycle selector switch from the user interface assembly opening by lifting the locking tab on the wash cycle selector switch and turning the selector switch in a counterclockwise direction.
7. Three locking tabs located at the bottom of the console insert panel secure the user interface assembly to the console insert panel. Using a flat-blade screwdriver, gently apply pressure to the locking tabs to release the user interface assembly.

Reinstalling the Electronic Assemblies

1. Refer to preceding removal sections and replace in reverse order.
2. Plug in washer or reconnect power.

NOTE: When reconnecting wire connections, route wires as shown in Figure 3, page 6-16. Be sure to route wires beneath the retainer clips on the machine/motor control, and ensure user interface assembly wire does not get pinched between the console assembly and the console tray when reassembling top.

NOTE: Ensure the console gasket is in place when reinstalling the console.

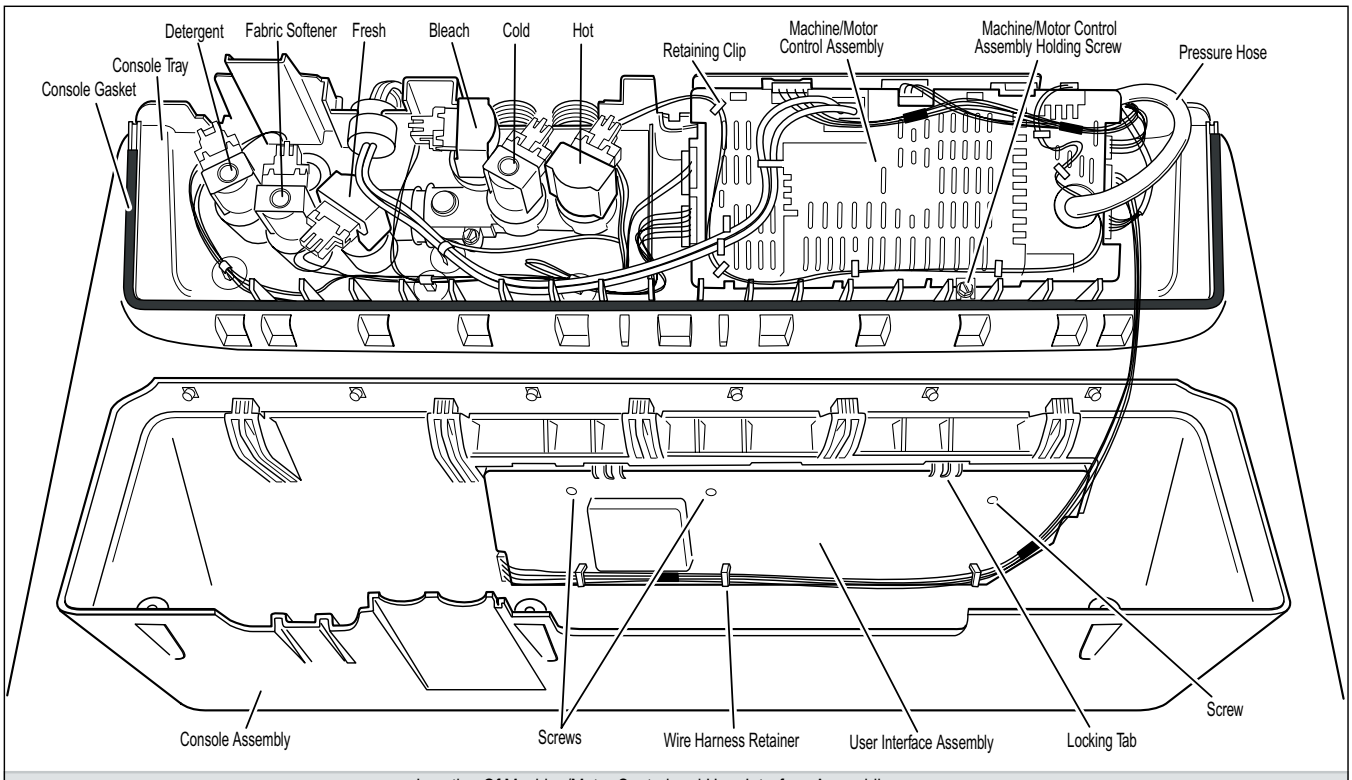

Location Of Machine/Motor Control and User Interface Assemblies

Figure 3

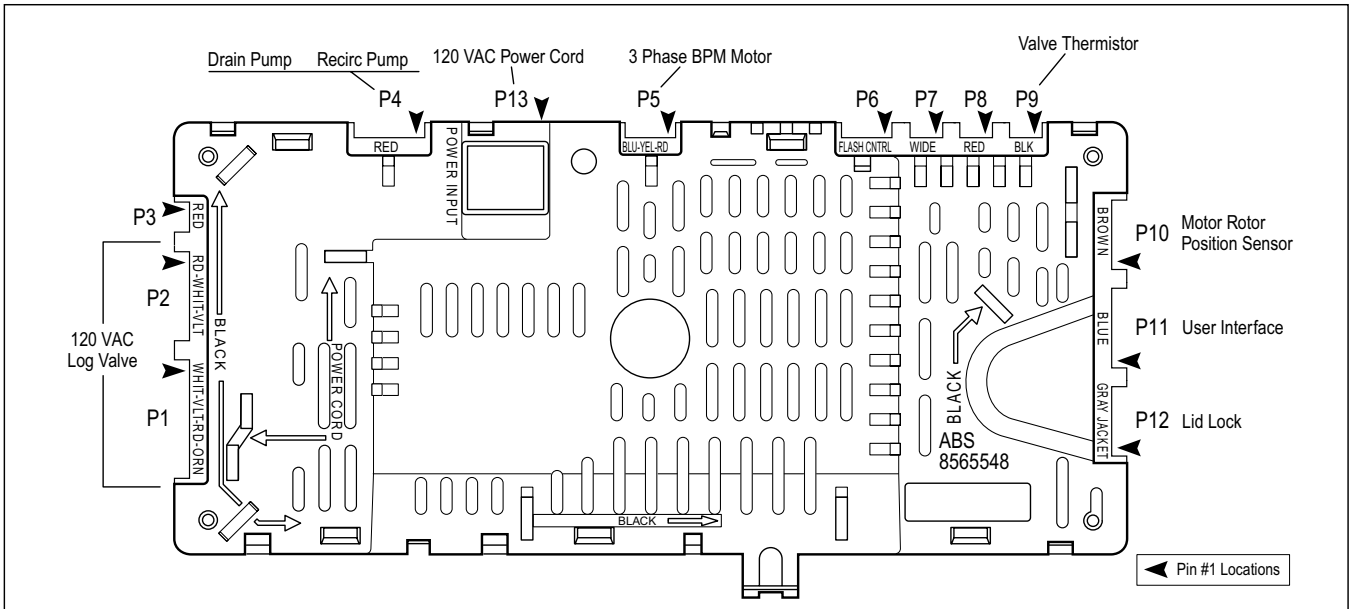

Machine/Motor Control Connections

Figure 4

WIRING DIAGRAM

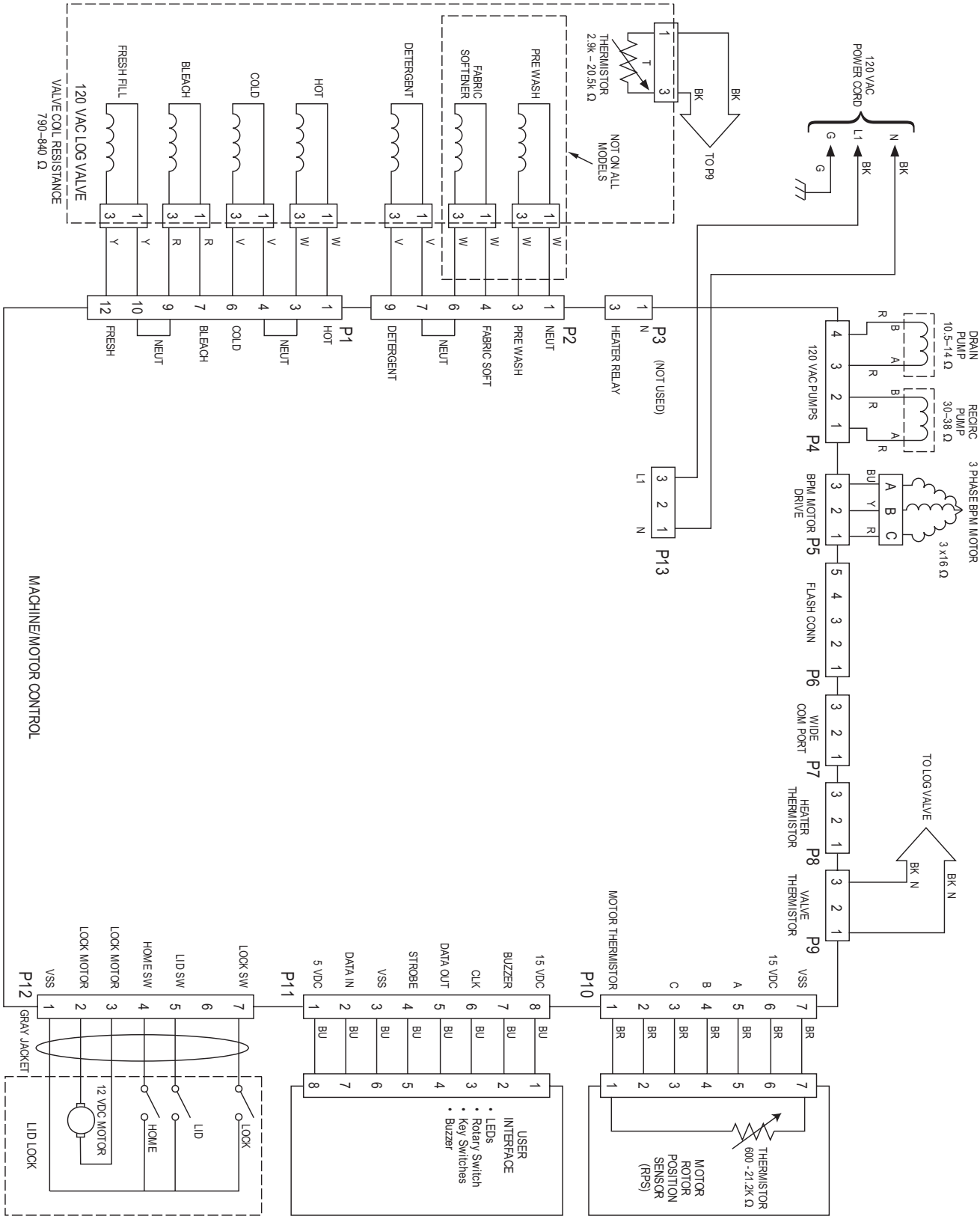

— NOTES —

PRODUCT SPECIFICATIONS
AND
WARRANTY INFORMATION SOURCES

IN THE UNITED STATES:

FOR PRODUCT SPECIFICATIONS AND WARANTY INFORMATION CALL:

FOR WHIRLPOOL PRODUCTS: 1-800-253-1301
FOR KITCHENAID PRODUCTS: 1-800-422-1230
FOR ROPER PRODUCTS: 1-800-447-6737

FOR TECHNICAL ASSISTANCE WHILE AT THE CUSTOMER'S HOME CALL:

THE TECHNICAL ASSISTANCE LINE: 1-800-253-2870

HAVE YOUR STORE NUMBER READY TO IDENTIFY YOU AS AN AUTHORIZED IN-HOME SERVICE PROFESSIONAL

FOR LITERATURE ORDERS:

PHONE: 1-800-851-4605

FOR TECHNICAL INFORMATION AND SERVICE POINTERS:

www.servicematters.com

IN CANADA:

FOR PRODUCT SPECIFICATIONS AND WARRANTY INFORMATION CALL:

1-800-461-5681

FOR TECHNICAL ASSISTANCE WHILE AT THE CUSTOMER'S HOME CALL:

THE TECHNICAL ASSISTANCE LINE: 1-800-488-4791

HAVE YOUR STORE NUMBER READY TO IDENTIFY YOU AS AN AUTHORIZED IN-HOME SERVICE PROFESSIONAL

Whirlpool
CORPORATION