30" (76.2 cm) and 36" (91.4 cm) Gas Downdraft Cooktop

PRODUCT MODEL NUMBERS

KCGD500G KCGD506G

GAS REQUIREMENTS

Type of Gas

Natural Gas:

This cooktop is factory set for use with Natural gas. If converting to LP gas, see the “LP Gas Conversion” instructions provided in the package containing literature. The model/serial/rating plate located on bottom of the cooktop has information on the types of gas that can be used. If the types of gas listed do not include the type of gas available, check with the local gas supplier.

LP Gas Conversion:

Conversion must be done by a qualified service technician.

No attempt shall be made to convert the cooktop from the gas specified on the model/serial/rating plate for use with a different gas without consulting the serving gas supplier. See the “Gas Conversion” instructions provided in the package containing literature.

Gas Supply Line

- Provide a gas supply line of ¾" (1.9 cm) rigid pipe to the cooktop location. A smaller size pipe on longer runs may result in insufficient gas supply. Pipe-joint compounds that resist the action of LP gas must be used. Do not use TEFLON®† tape. With LP gas, piping or tubing size should be ½" minimum. Usually, LP gas suppliers determine the size and materials used in the system.

Flexible metal appliance connector:

- If local codes permit, use a ½" or ¾" I.D. flexible stainless steel tubing gas connector, designed by CSA to connect the cooktop to the rigid gas supply line.

- A ½" male pipe thread is needed for connection to the female pipe threads of the inlet to the cooktop pressure regulator.
- Do not kink or damage the flexible metal tubing when moving the cooktop.
- Must include a shut-off valve:
  The supply line must be equipped with a manual shut-off valve. This valve should be located in the same room. It must be accessible without removing the cooktop, and it should be in a location that allows ease of opening and closing. Do not block access to shut-off valve. The valve is for turning on or shutting off gas to the cooktop.

A. Gas supply line
B. Shut-off valve open position
C. To cooktop

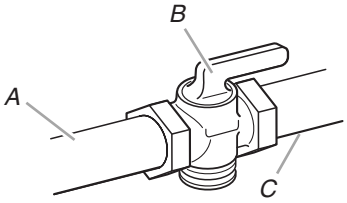

PRODUCT DIMENSIONS

30" (76.2 cm) Cooktop

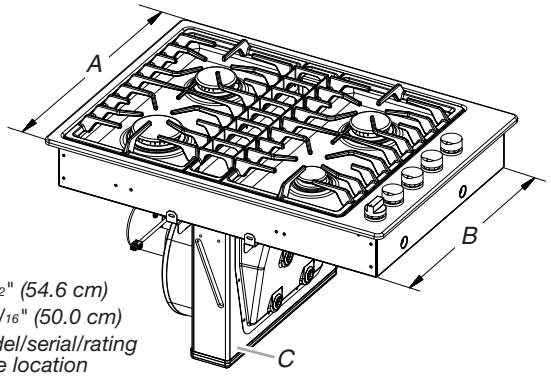

A. 21 1/2" (54.6 cm)
B. 19 11/16" (50.0 cm)
C. Model/serial/rating plate location

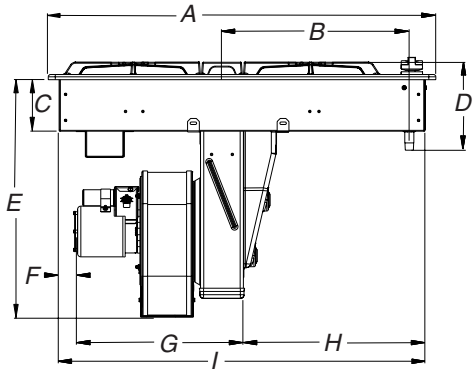

A. 30" (76.2 cm)
B. 4" (10.2 cm)
C. 6 19/32" (16.8 cm)
D. 18 7/16" (46.8 cm)
E. 1 11/16" (4.3 cm) recommended minimum cabinet to motor clearance
F. 12 1/2" (31.8 cm)
G. 14" (35.6 cm)
H. 28 1/4" (71.4 cm)

36" (91.4 cm) Cooktop

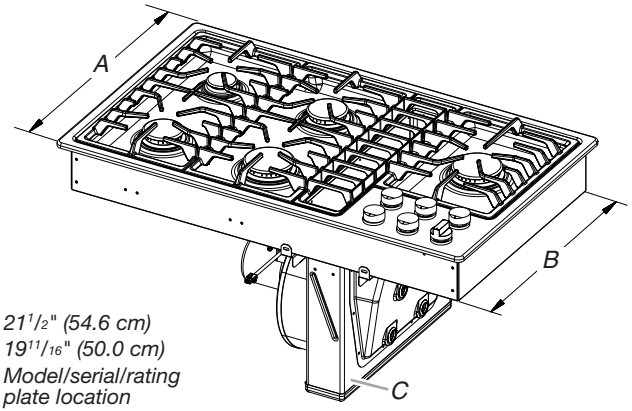

A. 21 1/2" (54.6 cm)
B. 19 11/16" (50.0 cm)
C. Model/serial/rating plate location

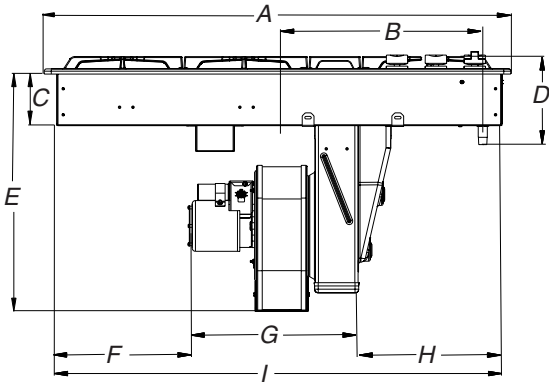

A. 36" (91.4 cm)
B. 4" (10.2 cm)
C. 6 19/32" (16.8 cm)
D. 18 7/16" (46.8 cm)
E. 10 3/8" (26.4 cm) recommended minimum cabinet to motor clearance
F. 12 1/2" (31.8 cm)
G. 13" (33.0 cm)
H. 34 3/8" (87.3 cm)

Because Whirlpool Corporation includes a continuous commitment to improve our products, we reserve the right to change materials and specifications without notice.

Dimensions are for planning purposes only. For complete details, see Installation Instructions packed with product. Specifications subject to change without notice.

Ref. W10848427B
12/19/2016

ELECTRICAL REQUIREMENTS

A 120-volt, 60 Hz, AC-only, 15-amp, fused electrical circuit is required. A time-delay fuse or circuit breaker is also recommended. It is recommended that a separate circuit serving only this cooktop be provided.

CABINET DIMENSIONS

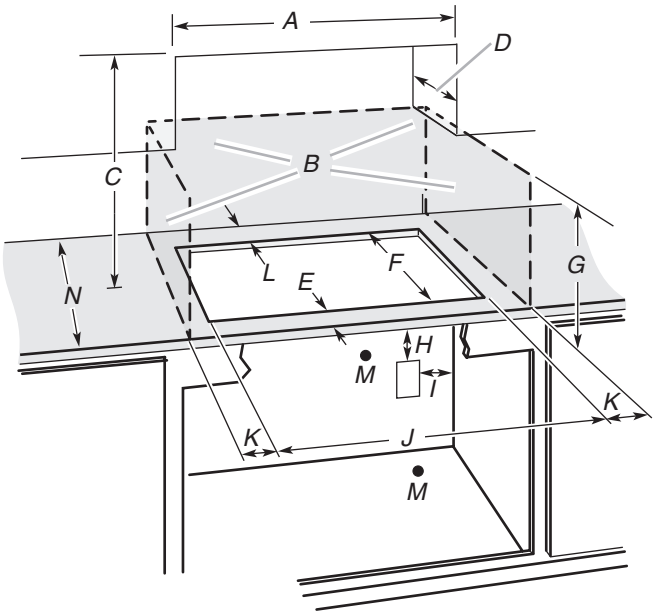

A. 30" (76.2 cm) on 30" (76.2 cm) models
36" (91.4 cm) on 36" (91.4 cm) models

B. Combustible area above countertop (shown by dashed box above)

C. 30" (76.2 cm) minimum clearance between top of cooktop platform and bottom of uncovered wood or metal cabinet (24" [61.0 cm] minimum clearance if bottom of wood or metal cabinet is covered by not less than 1/4" [0.6 cm] flame-retardant millboard covered with not less than No. 28 MSG sheet steel, 0.015" [0.04 cm] stainless steel, 0.024" [0.06 cm] aluminum, or 0.020" [0.05 cm] copper)

D. 13" (33.0 cm) recommended upper cabinet depth

E. 2 1/8" (5.4 cm)

F. 19 15/16" (50.6 cm)

G. 18" (45.7 cm) minimum clearance from upper cabinet to countertop within minimum horizontal clearances to cooktop

H. Junction box or outlet: 12" (30.5 cm) minimum from bottom of countertop

I. Junction box or outlet: 10" (25.4 cm) from right-hand side of cabinet

J. 28 5/8" (72.7 cm) on 30" (76.2 cm) models
34 3/4" (88.3 cm) on 36" (91.4 cm) models

K. 6" (15.2 cm) minimum distance to nearest left and right side combustible surface above cooktop

L. 2" (5.1 cm) minimum clearance between back wall and countertop cutout

M. Gas line opening - Wall: anywhere 6" (15.2 cm) below underside of countertop. Cabinet floor: anywhere within 6" (15.2 cm) of rear wall is recommended.

N. 25" (63.5 cm) depth of countertop

NOTE: After making the countertop cutout, some installations may require notching down the base cabinet side walls to clear the cooktop base. To avoid this modification, use a base cabinet with sidewalls wider than the cutout.

■ A minimum side clearance of 6" (15.2 cm) is recommended between side of cooktop and side wall for maximum ventilation performance.

CUTOUT DIMENSIONS

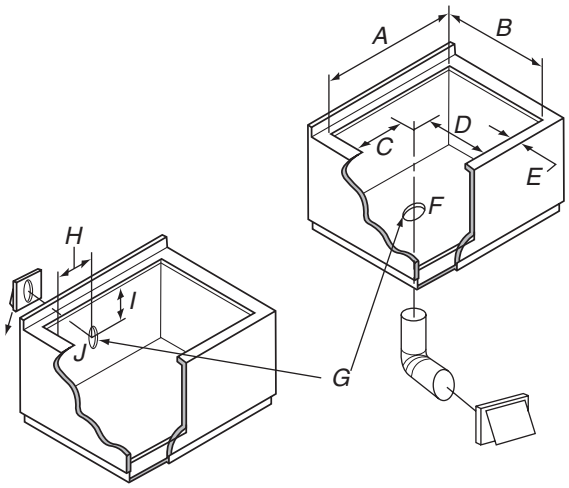

A. 28 5/8" (72.7 cm) maximum on 30" (76.2 cm) models
34 3/4" (88.3 cm) maximum on 36" (91.4 cm) models

B. 19 15/16" (50.6 cm) maximum on both 30" (76.2 cm) and 36" (91.4 cm) models

C. 8 1/2" (21.6 cm) on 30" (76.2 cm) models
17 1/2" (44.4 cm) on 36" (91.4 cm) models

D. 5 3/4" (14.6 cm) on both 30" (76.2 cm) and 36" (91.4 cm) models

E. 2 1/8" (5.4 cm) minimum space to front edge of cooktop

F. Floor exhaust option

G. 6 1/8" (15.6 cm) for 6" vent system

H. 8 1/2" (21.6 cm) on 30" (76.2 cm) models
17 1/2" (44.4 cm) on 36" (91.4 cm) models

I. 16" (40.6 cm) on both 30" (76.2 cm) and 36" (91.4 cm) models

J. Wall exhaust option

Because Whirlpool Corporation includes a continuous commitment to improve our products, we reserve the right to change materials and specifications without notice.

Dimensions are for planning purposes only. For complete details, see Installation Instructions packed with product. Specifications subject to change without notice.

Ref. W10848427B
12/19/2016