30" (76.2 CM) AND 36" (91.4 CM) GAS BUILT-IN COOKTOP

PRODUCT MODEL NUMBERS

KCGS350E	KCGS950E	MGC9530D	WCG75US0D
KCGS356E	KCGS956E	MGC9536D	WCG97US0D
KCGS550E	MGC7430D	WCG51US0D	WCG97US6D
KCGS556E	MGC7536D	WCG51US6D	

GAS SUPPLY REQUIREMENTS

Type of Gas

Natural Gas:

- This cooktop is factory set for use with Natural gas. If converting to LP gas, see the “LP Gas Conversion” instructions provided in the package containing literature. The model/serial rating plate located on the underside of the cooktop base has information on the types of gas that can be used. If the types of gas listed do not include the type of gas available, check with the local gas supplier.

LP Gas Conversion:

Conversion must be done by a qualified service technician.

No attempt shall be made to convert the cooktop from the gas specified on the model/serial rating plate for use with a different gas without consulting the serving gas supplier. See the Gas Conversion instructions provided in the package containing literature.

Gas Supply Line

- Provide a gas supply line of ¾" (1.9 cm) rigid pipe to the cooktop location. A smaller size pipe on longer runs may result in insufficient gas supply. Pipe-joint compounds that resist the action of LP gas must be used. Do not use TEFLON®† tape. With LP gas, piping or tubing size should be ½" minimum. Usually, LP gas suppliers determine the size and materials used in the system.

  Flexible metal appliance connector:

  - If local codes permit, use a ½" or ¾" I.D. flexible stainless steel tubing gas connector, designed by CSA to connect the cooktop to the rigid gas supply line.

  - A ½" male pipe thread is needed for connection to the female pipe threads of the inlet to the cooktop pressure regulator.
  - Do not kink or damage the flexible metal tubing when moving the cooktop.

- Must include a shutoff valve:
  The supply line must be equipped with a manual shutoff valve. This valve should be located in the same room but external to the cooktop opening, such as an adjacent cabinet. It must be accessible without removing the cooktop, and it should be in a location that allows ease of opening and closing. Do not block access to shutoff valve. The valve is for turning on or shutting off gas to the cooktop.

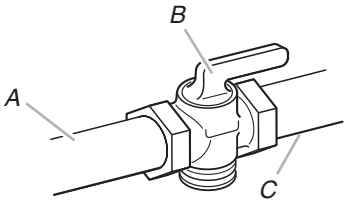

A. Gas supply line
B. Shutoff valve “open” position
C. To cooktop

†®TEFLON is a registered trademark of E.I. Du Pont De Nemours and Company.

ELECTRICAL REQUIREMENTS

- A 120 volt, 60 Hz, AC only, 15-amp, fused electrical circuit is required. A time-delay fuse or circuit breaker is also recommended. It is recommended that a separate circuit serving only this cooktop be provided.
- Electronic ignition systems operate within wide voltage limits, but proper grounding and polarity are necessary. Check that the outlet provides 120-volt power and is correctly grounded.

Because Whirlpool Corporation policy includes a continuous commitment to improve our products, we reserve the right to change materials and specifications without notice.

Dimensions are for planning purposes only. For complete details, see Installation Instructions packed with product. Specifications subject to change without notice.

Ref. W10597144B
8/10/15

KCGS550ESS and KCGS950ESS Models

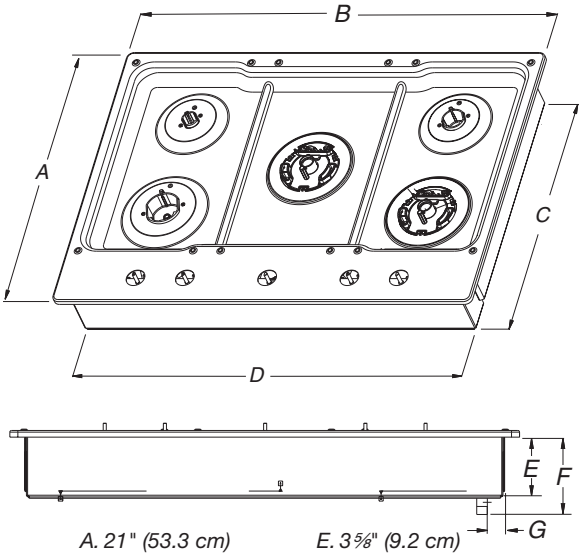

A. 21" (53.3 cm)
B. 30" (76.2 cm)
C. 19⅜" (49.2 cm)
D. 28⅜" (72.1 cm)
E. 3⅝" (9.2 cm)
F. 4 9/16" (11.6 cm)
G. 1⅜" (3.4 cm)

KCGS556ESS and KCGS956ESS Models

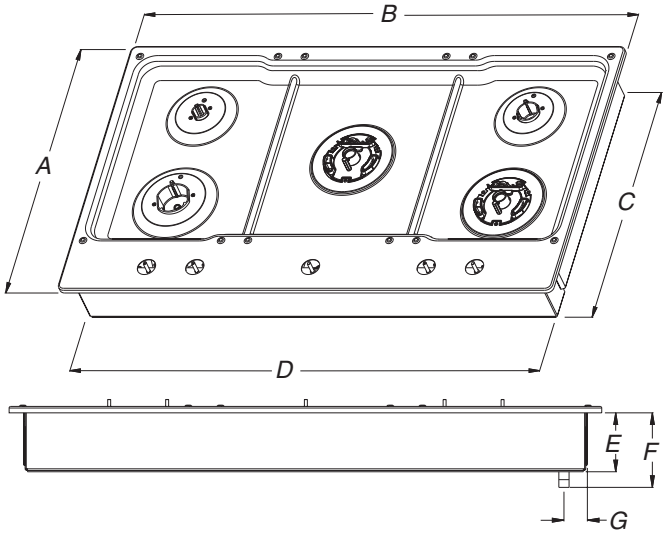

A. 21" (53.3 cm)
B. 36¼" (92.0 cm)
C. 19⅜" (49.2 cm)
D. 34⅜" (88.1 cm)
E. 3⅝" (9.2 cm)
F. 4 9/16" (11.6 cm)
G. 1 7/16" (3.6 cm)

All Other 30" (76.2 cm) Models

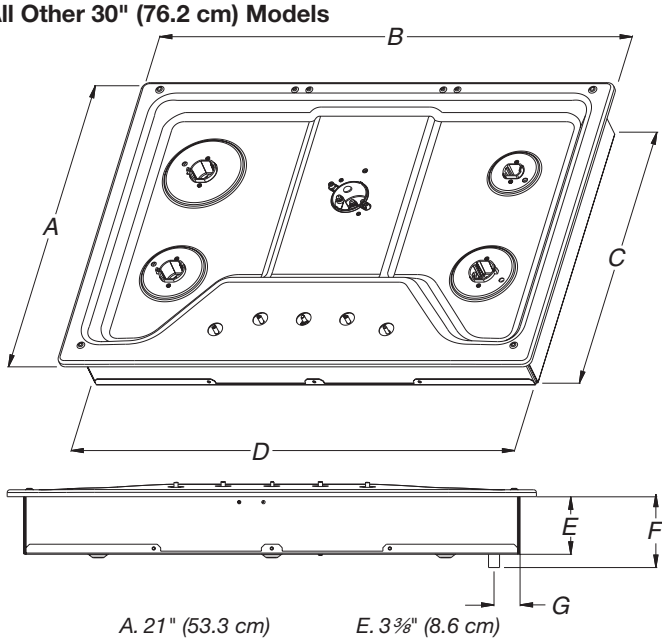

A. 21" (53.3 cm)
B. 30" (76.2 cm)
C. 18⅞" (48.0 cm)
D. 28⅜" (72.1 cm)
E. 3⅜" (8.6 cm)
F. 4⅛" (10.5 cm)
G. 1½" (3.8 cm)

All Other 36" (91.4 cm) Models

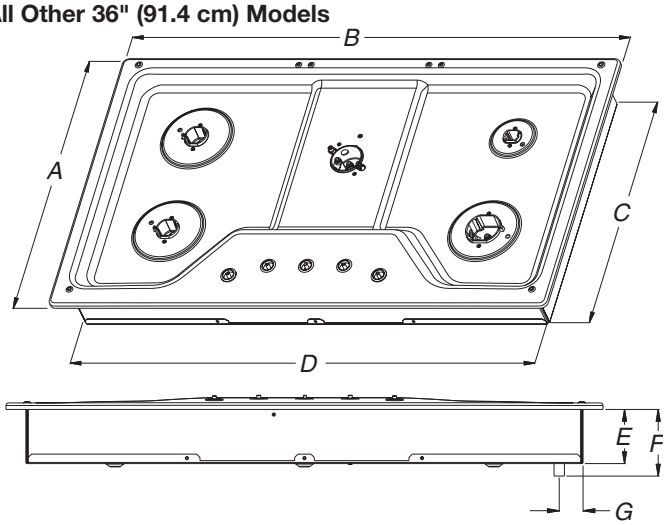

A. 21" (53.3 cm)
B. 36" (91.4 cm)
C. 18⅞" (48.0 cm)
D. 33¾" (85.7 cm)
E. 3⅜" (8.6 cm)
F. 4⅛" (10.5 cm)
G. 1½" (3.8 cm)

Because Whirlpool Corporation policy includes a continuous commitment to improve our products, we reserve the right to change materials and specifications without notice.

Dimensions are for planning purposes only. For complete details, see Installation Instructions packed with product. Specifications subject to change without notice.

Ref. W10597144B
8/10/15

CABINET DIMENSIONS

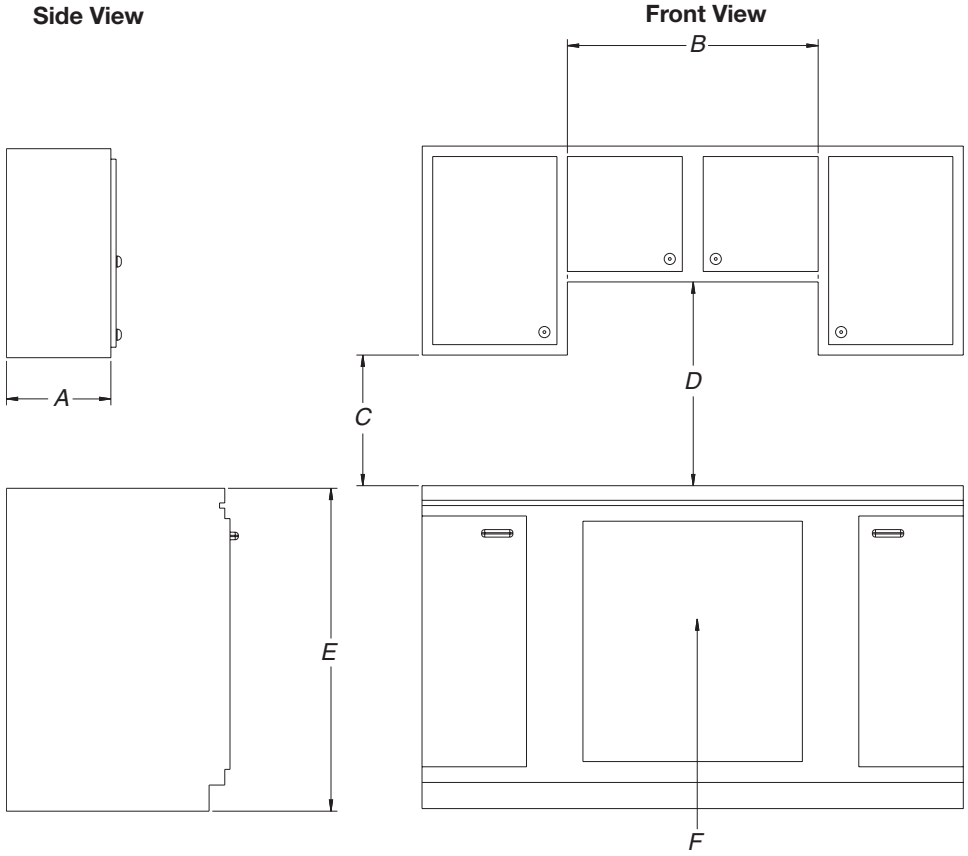

A. 13" (33.0 cm) recommended upper cabinet depth.

B. 30" (76.2 cm) for 30" models; 36" (91.4 cm) for 36" models.

C. 18" (45.7 cm) minimum clearance from upper cabinet to countertop within minimum horizontal clearances to cooktop.

D. 30" (76.2 cm) minimum clearance between top of cooktop platform and bottom of uncovered wood or metal cabinet. 24" [61 cm] minimum clearance if bottom of wood or metal cabinet is covered by not less than ¼" [0.6 cm] flame retardant millboard covered with not less than No. 28 MSG sheet steel, 0.015" [0.04 cm] stainless steel, or 0.024" [0.06 cm] aluminum or 0.020" [0.05 cm] copper

E. 36" (91.4 cm) top of countertop to floor.

F. Gas line opening - Wall: anywhere 5" (12.7 cm) below underside of countertop. Cabinet floor: anywhere within 6" (15.2 cm) of rear wall is recommended.

Because Whirlpool Corporation policy includes a continuous commitment to improve our products, we reserve the right to change materials and specifications without notice.

Dimensions are for planning purposes only. For complete details, see Installation Instructions packed with product. Specifications subject to change without notice.

Ref. W10597144B
8/10/15

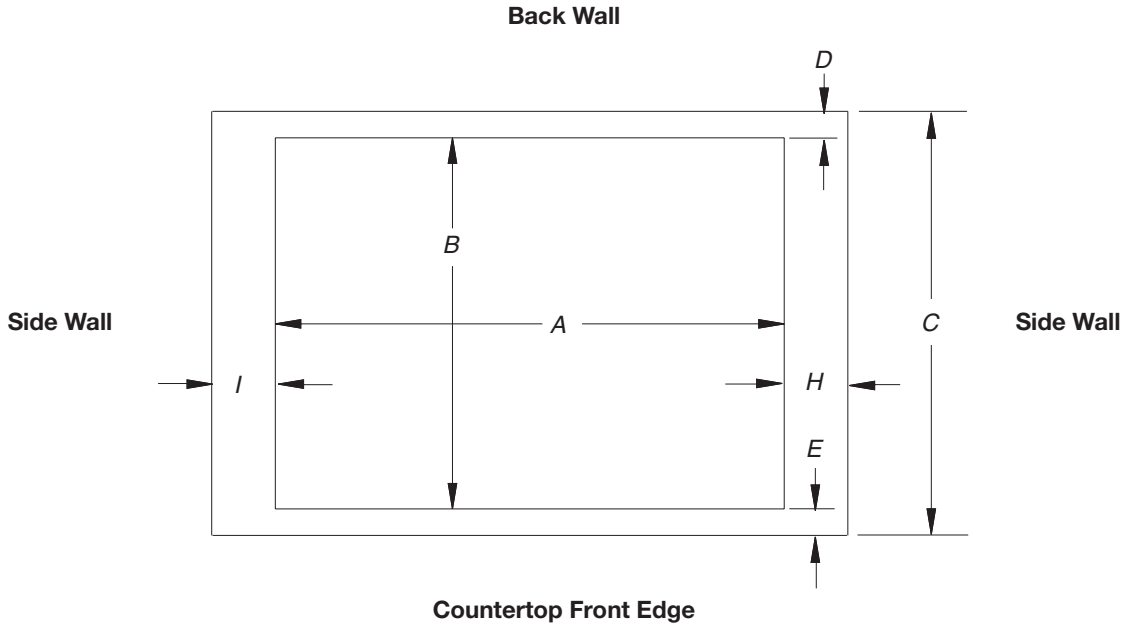

Cutout (Product Opening) Dimensions						
30" (76.2 cm) Models						
Models	**A**			**B**		
	Min	**Recommended**	**Max**	**Min**	**Recommended**	**Max**
KCGS550 and KCGS950 **All Other 30" (76.2 cm) Models**	28 1/2" (72.4 cm) 28 1/2" (72.4 cm)	28 7/8" (73.4 cm) 28 7/8" (73.4 cm)	29 5/16" (74.3 cm) 29 5/16" (74.3 cm)	19 1/2" (49.5 cm) 19" (48.3 cm)	19 13/16" (50.2 cm) 19 1/2" (49.5 cm)	20" (50.8 cm) 20" (50.8 cm)
36" (91.4 cm)Models						
KCGS556 and KCGS956 **All Other 36" (91.4 cm) Models**	34 7/8" (88.4 cm) 33 7/8" (86.0 cm)	35 3/16" (89.4 cm) 34 5/16" (87.0 cm)	35 5/8" (90.3 cm) 35 1/4" (89.5 cm)	19 1/2" (49.5 cm) 19" (48.3 cm)	19 13/16" (50.2 cm) 19 1/2" (49.5 cm)	20" (50.8 cm) 20" (50.8 cm)

Side Walls (Combustible Surfaces)	
Models	**H and I**
KCGS5 and KCGS9	H and I added together must be at least 48" (122.0 cm), with each side individually being at least 8" (20.3 cm).
KCGS350, KCGS356, MGC9536, WCG97US0, WCG97US6	H and I added together must be at least 48" (122.0 cm), with each side individually being at least 12" (30.5 cm).
All Other Models	Both have to be 8" (20.3 cm) or more.

Back Wall and Countertop Front Dimensions			
Models	**C**	**D**	**E**
KCGS550 and KCGS950	25" (63.5 cm)	2 7/8" (7.3 cm)	2 3/4" (6.9 cm)
All Other Models			3 1/8" (7.9 cm)

NOTES: After making the countertop cutout, some installations may require notching down the base cabinet side walls to clear the cooktop base. To avoid this modification, use a base cabinet with sidewalls wider than the cutout.

If cabinet has a drawer, a 4" (10.2 cm) depth clearance from the countertop to the top of the drawer (or other obstruction) in base cabinet is required. The drawer depth may need to be shortened to avoid interfering with the regulator.

IMPORTANT: If a built-in wall oven is to be installed below this cooktop, the grounded outlet and gas supply piping must be located in an adjacent cabinet.

This cooktop and its gas and electrical supply sources must be installed before the undercounter built-in wall oven is installed.

Because Whirlpool Corporation policy includes a continuous commitment to improve our products, we reserve the right to change materials and specifications without notice.

Dimensions are for planning purposes only. For complete details, see Installation Instructions packed with product. Specifications subject to change without notice.

Ref. W10597144B
8/10/15