30" (76.2 cm) Freestanding Gas Range

PRODUCT MODEL NUMBERS

WGG555S0B WGG745S0F WGG755S0B

GAS SUPPLY REQUIREMENTS

Gas supply line:

- Provide a gas supply line of 3/4" (1.9 cm) rigid pipe to the range location. A smaller size pipe on longer runs may result in insufficient gas supply. With LP gas, piping or tubing size can be 1/2" (1.3 cm) minimum. Usually, LP gas suppliers determine the size and materials used in the system.

  NOTE: Pipe-joint compounds that resist the action of LP gas must be used. Do not use TEFLON®† tape.

Flexible metal appliance connector:

- If local codes permit, a new CSA design-certified, 4 to 5 ft (122 to 152.4 cm) long, 1/2" (1.3 cm) or 3/4" (1.9 cm) I.D., flexible metal appliance connector may be used for connecting range to the gas supply line.

- A 1/2" (1.3 cm) male pipe thread is needed for connection to the female pipe threads of the inlet to the appliance pressure regulator.
- Do not kink or damage the flexible metal tubing when moving the range.
- Must include a shutoff valve:
  The supply line must be equipped with a manual shutoff valve. This valve should be located in the same room but external to the range opening, such as an adjacent cabinet. It should be in a location that allows ease of opening and closing. Do not block access to shutoff valve. The valve is for turning on or shutting off gas to the range.

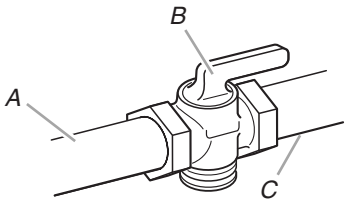

A. Gas supply line
B. Shutoff valve "open" position
C. To range

Type of Gas

Natural gas:

- This range is factory set for use with Natural gas. See "Gas Conversions" section. The model/serial rating plate located behind the control panel has information on the types of gas that can be used. If the types of gas listed do not include the type of gas available, check with the local gas supplier.

LP gas conversion:

Conversion must be done by a qualified service technician. No attempt shall be made to convert the appliance from the gas specified on the model/serial rating plate for use with a different gas without consulting the serving gas supplier. See "Gas Conversions" section.

PRODUCT DIMENSIONS

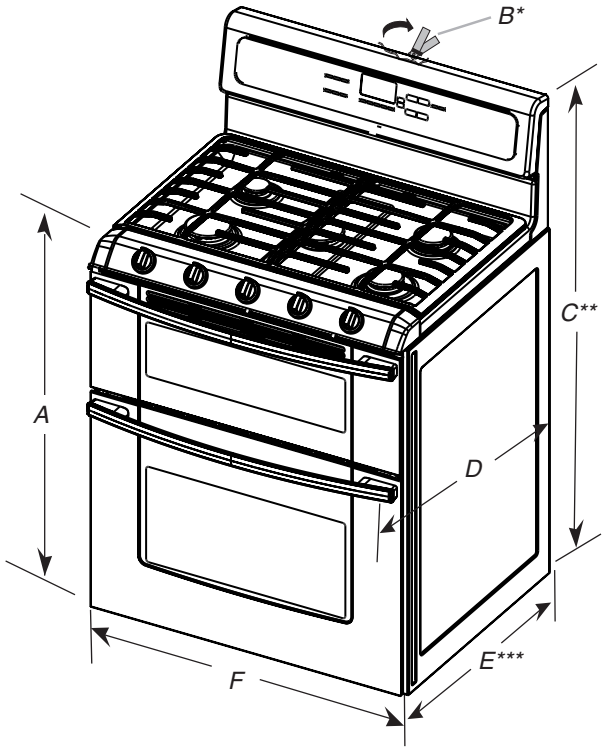

*A. 35 3/4" ± 1/8" (90.8 cm ± 0.3 cm) cooktop height (minimum) with leveling legs screwed all the way in**
*B. Model/serial/rating plates (located behind the control panel)***
*C. 47 1/8" ± 1/8" (119.7 cm ± 0.3 cm) overall height (minimum) with leveling legs screwed all the way in**
D. 28 1/2" ± 1/4" (72.4 cm ± 0.6 cm) depth with handle
*E. 26 1/8" ± 1/8" (66.4 cm ± 0.3 cm)****
F. 29 15/16" ± 1/16" (76.0 cm ± 0.2 cm) width

* Range can be raised approximately 1" (2.5 cm) by adjusting the leveling legs.

** Model/serial/rating plates may be rotated up from behind the control panel for viewing from the front of the range.

*** Excludes handle. Dimension given is from wall to front of oven door and will vary based on electric outlet receptacle installation.

ELECTRICAL REQUIREMENTS

IMPORTANT: The range must be electrically grounded in accordance with local codes and ordinances, or in the absence of local codes, with the National Electrical Code, ANSI/NFPA 70 or Canadian Electrical Code, CSA C22.1. If codes permit and a separate ground wire is used, it is recommended that a qualified electrical installer determine that the ground path is adequate.

- A 120 volt, 60 Hz., AC only, 15-amp fused, electrical circuit is required. A time-delay fuse or circuit breaker is also recommended. It is recommended that a separate circuit serving only this range be provided.
- Electronic ignition systems operate within wide voltage limits, but proper grounding and polarity are necessary. Check that the outlet provides 120-volt power and is correctly grounded.

Because Whirlpool Corporation includes a continues commitment to improve our products, we reserve the right to change materials and specifications without notice.

Dimensions are for planning purposes only. For complete details, see Installation Instructions packed with product. Specifications subject to change without notice.

Ref. W10575961B
05/06/2016

CABINET OPENING DIMENSIONS

Cabinet opening dimensions shown are for: 25" (63.5 cm) countertop depth, 24" (61 cm) base cabinet depth, and 36" (91.4 cm) countertop height

IMPORTANT: If installing a range hood or microwave hood combination above the range, follow the range hood or microwave hood combination installation instructions for dimensional clearances above the cooktop surface.

Range may be installed with zero clearance to combustible construction at the rear and on the sides below the cooktop.

A. 18" (45.7 cm) upper cabinet to countertop
B. 13" (33.0 cm) upper cabinet depth
C. 30" (76.2 cm) min. opening width
D. For minimum clearance to the top of the cooktop, see NOTE.
E. 30" (76.2 cm) min. opening width
F. 3" (7.6 cm) min. clearance from both sides of the range to the side wall or other combustible material.
G. Cabinet door or hinges should not extend into the cutout.
H. 3" (7.6 cm) distance from wall
I. 1 1/2" (3.8 cm) min. from right side cabinet
J. 8" (20.3 cm) width
K. 7" (17.8 cm) min. from floor
L. 2" (5.1 cm) min. from floor

* Drill on centerline 1 1/4" (3.1 cm) from rear wall for gas supply line.

** Gas lines must be installed within the shaded area to ensure proper alignment of this oven with cabinets.

*** Electrical plugs must be installed within the shaded area to ensure proper alignment of this oven with cabinets.

NOTE: 24" (61.0 cm) minimum when bottom of wood or metal cabinet is covered by not less than 1/4" (0.64 cm) flame retardant millboard covered with not less than No. 28 MSG sheet steel, 0.015" (0.4 mm) stainless steel, 0.024" (0.6 mm) aluminum or 0.020" (0.5 mm) copper.

30" (76.2 cm) minimum clearance between the top of the cooking platform and the bottom of an uncovered wood or metal cabinet.

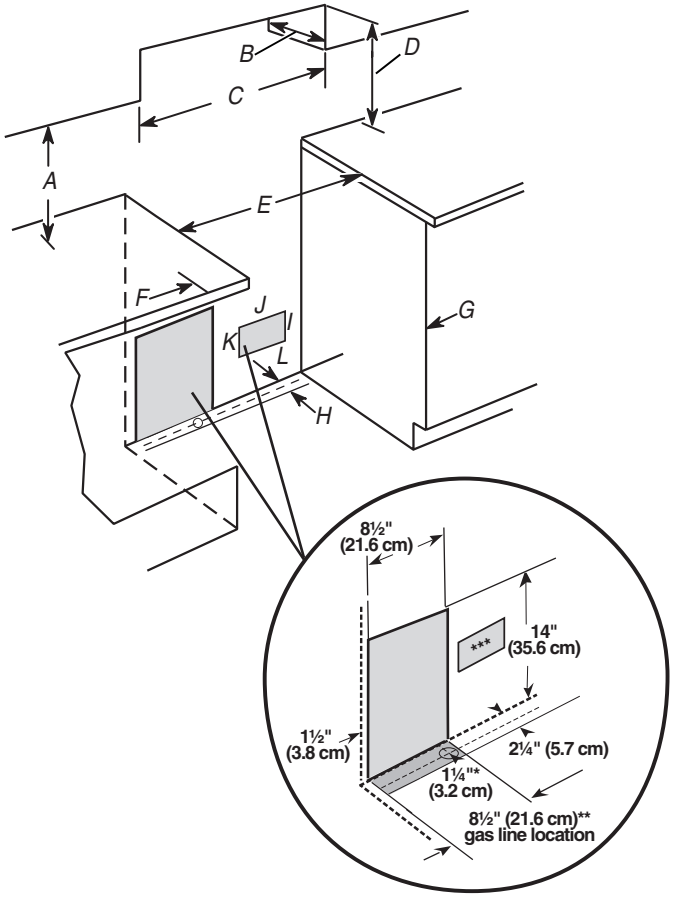

Because Whirlpool Corporation includes a continues commitment to improve our products, we reserve the right to change materials and specifications without notice.

Dimensions are for planning purposes only. For complete details, see Installation Instructions packed with product. Specifications subject to change without notice.

Ref. W10575961B
05/06/2016